STATE OF NEVADA

2014 -2015 School Bus

OUT-OF-SERVICE CRITERIA

Dale Erquiaga
~~Interm~~ Superintendent of Public Instruction

Steve Canavero, Ph.D.
Deputy Superintendent for Student Achievement

Mindy Martini
Deputy Superintendent for Business & Support Services

Dena Durish
Director of Educator Effectiveness

Diana Hollander
Program Officer, Pupil Transportation

NEVADA STATE BOARD OF EDUCATION
Nevada State Board of Education

2014 - 2015
MEMBERS

Elaine Wynn, President
Allison Serafin, Vice President
Dave Cook
Alexis Gonzales-Black
Freeman Holbrook
Teri Jamin
Kevin Melcher
Mark Newburn
Jeff Zander
Kamryn Mock, Student Representative

DEPARTMENT MISSON STATEMENT

To improve student achievement and educator effectiveness by ensuring opportunities, facilitating learning, and promoting excellence.

DEPARTMENT VISION STATEMENT

All Nevadan's ready for success in the 21st Century

INTRODUCTION

The purpose of the Nevada School Bus Out-of Service Criteria is to identify defects on a school bus that mandate the school bus be placed out-of-service.

NRS 392.400 requires that vehicles used to transport students be in good condition and inspected semiannually by the Nevada Highway Patrol, Commercial Enforcement to ensure the vehicles are mechanically safe and meet minimum standards (Nevada State School Bus Standards), established by the Nevada State Board of Education. The Nevada Highway Patrol has the authority to place any bus out-of-service for any violation listed in this manual.

School buses that have an Out-of-Service condition while transporting students are allowed to return to the safest spot or destination, whichever comes first, as long as the violation is not a serious mechanical failure and does not immediately impact the safe transportation of the students.

This document was approved by the Nevada State Board of Education during the July 10, 2014 State Board of Education meeting and is effective as of that date.

If you have questions regarding this document, please contact Diana Hollander, Program Officer, Pupil Transportation, Nevada Department of Education, 9890 S. Maryland Pkwy, Suite 221, Las Vegas, Nevada 89183. Phone number is 702-668-4319 and email address at dhollander@doe.nv.gov.

TABLE OF CONTENTS

I. DRIVER OUT-OF-SERVICE CRITERIA 6

1. Driver's Age 6
2. Commercial Driver's License (CDL) 6
3. Driver Medical/Physical Requirements 6
4. Sickness 7
5. Fatigue 7
6. Communication 7
7. Drugs and Other Substances 7
8. Intoxicating Beverages 7
9. Driver's Record of Duty Status 8

II. VEHICLE OUT-OF-SERVICE CRITERIA

1. BRAKE SYSTEMS

A. Defective Bakes 9
B. Brake Adjustment Limit Reference Charts 10
C. Front Steering Axle(s) Brakes 15
D. Spring Brake Chamber 18
E. Parking Brake 18
F. Brake Smoke/Fire 18
G. Brake Drums or Rotors (discs) 19
H. Brake Hose/Tubing 19
I. Air Pressure Gauge 20
J. Low Pressure Warning Device 20
K. Air Loss Rate 20
L. Air Reservoir (Tank) 20
M. Air compressor 20
N. Hydraulic Brakes 21
O. Vacuum Brakes 21

2. ELECTRICAL CABLES AND SYSTEMS IN ENGINE AND BATTERY COMPARTMENTS

Electrical Cables and Systems in Engine and Battery Compartment 22

3. EMERGENCY EQUIPMENT

A. Fire Extinguisher 22

B. First Aid and Body Fluid Kit 23
C. Emergency Warning Devices 23

4. EMERGENCY EXITS 23

5. EXHAUST SYSTEM 23

6. FRAME & BODY

A. Frame Members 24
B. Tire and Wheel Clearance 24
C. Roof/Body Structure 24

7. FUEL SYSTEM

A. Liquid Fuels 26
B. Gaseous Fuels 26

8. LIGHTING DEVICES (HEADLAMPS, TAIL LAMPS, STOP LAMPS, TURN SIGNALS, LAMPS AND BACK-UP WARNING DEVICE)

A. Headlamps 28
B. Lamps on Rear 28
C. Stop Lamp 28
D. Turn Signals 28
E. Four-Way Hazard Lights 28
F. Overhead Amber Flashing Lights 29
G. Overhead Red Flashing Lights 29
H. Back-Up Warning Alarm 29

9. MISCELLANEOUS

A. Aisle 29
B. Aerosol Cans 29
C. Crossing Control Arm 29
D. Defrosters 29
E. Door, Entrance 29
F. Floors 29
G. Handrails 30
H. Horn 30
I. Mirrors 30
J. Seats and Barriers 30
K. Seat (Driver) 30

L. Seat Belts 30
M. Step Well 31
N. Stop Signal Arm(s) 31
O. Wheelchair Lift Equipped Buses 31
P. Windows 31

10. STEERING MECHANISM

A. Steering Wheel Lash (Free Play) 32
B. Steering Column 32
C. Front Axle Beam and all Steering Components Other than the Steering Column 33
D. Steering Gear Box (including Rack and Pinion) 33
E. Pitman Arm 33
F. Power Steering 33
G. Ball and Socket Joints 34
H. Tie Rods and Drag Links 34
I. Nuts 34
J. Steering System 34

11. SUSPENSION

A. Axle Parts/Members 35
B. Spring Assembly 35
C. Composite Springs 36
D. Torque, Radius, or Tracking Components 37

12. TIRES

A. Any Tire on any Front Steering Axle 38
B. All Tires other than those found on the Front Steering Axle 40

13. WHEELS, RIMS and HUBS

A. Lock or Side Ring 42
B. Rim Cracks 42
C. Disc Wheel Cracks 42
D. Bolt/Stud Holes (Disc Wheels) 42
E. Spoke Wheel Cracks 42
F. Tubeless Demountable Adapter Cracks 42
G. Wheel Fasteners 42
H. Welds 43
I. Hubs 43

14. WINDSHIELD WIPERS 44

PART I
DRIVER OUT-OF-SERVICE CRITERIA

1. DRIVER'S AGE: Driver is not at least 21 years of age. (§391.11(b)(1))

2. COMMERCIAL DRIVER'S LICENSE (CDL).

A. LICENSE

Does not possess a valid CDL issued by his/her state or jurisdiction of domicile. (§383.23(a) (2))

NOTE: "Does not possess a valid CDL" includes, but is not limited to: improper class, expired, cancelled, revoked, disqualified, suspended, or withdrawn.

B. Learner's Permit

(1) Is not accompanied by the holder of a valid CDL. (§383.23(c)(1))

(2) Does not hold a valid automobile drivers license or have a valid operator's status allowed by licensing jurisdiction. (§383.23(c) (2))

C. Endorsements and Restrictions

Operating a commercial vehicle without the proper endorsements or in violation of restrictions. (§383.23(a) (2)

D. Classification

Does not possess the proper class of license for vehicle being operated. (§383.91(a))

3. DRIVER MEDICAL/PHYSICAL REQUIREMENTS:

A. MEDICAL CERTIFICATE

(1) Operating a commercial vehicle without corrective lenses or hearing aid as indicated on the driver's medical certificate. (§391.11(b) (4))

(2) When an inspector has knowledge and/or evidence that a driver is/is not in possession of a valid medical certificate, and is not in possession of any and all required exemptions for the following conditions: vision, hearing, insulin-using diabetes, epilepsy or any other conditions which is likely to cause loss of consciousness or any loss of ability to control a commercial motor vehicle. (§391.41(a))

(3) Operating a passenger-carrying vehicle without possessing a valid medical certificate. (§391.41(a))

4. SICKNESS

When so impaired that the driver should not continue the trip. (§392.3)

5. FATIGUE

When so fatigued that the driver of a commercial motor vehicle should not continue the trip. (§392.3)

6. COMMUNICATION

Driver is unable to communicate sufficiently to understand and respond to official inquiries and directions. (§391.11(b) (2))

7. DRUGS AND OTHER SUBSTANCES

A. Shall not be in possession as identified under (§392.4(a)).

B. Driver shall not be under the influence, with probable cause as identified under section (§391.4(a)).

8. INTOXICATING BEVERAGES

A. Any driver who is under the influence of intoxicating beverage, consumes an intoxicating beverage regardless of its alcohol content, or have any measured alcohol concentration or any detected presence of alcohol while on duty, or operating or in physical control of a motor vehicle. (Consumption–§392.5(a) (1) or Presence/Influence–§392.5(a) (2))

B. Be on duty or operating a motor vehicle while the driver possesses an intoxicating beverage, regardless of its alcohol content. (Possession–§392.5(a) (3))

C. Driver violating any roadside out-of-service order regarding intoxicating beverages. (§392.5(c) (2))

9. DRIVER'S RECORD OF DUTY STATUS

A. Passenger Carrying Vehicles

(1) **10 Hour Rule** - Driving more than ten (10) hours following ten (10) consecutive hours off duty.

(2) **15 Hour Rule** - Driving for any period after having been on duty fifteen (15) hours following ten (10) consecutive hours off duty. (§395.3(1) (2)

(3) **60/70 Rule** - Driving after being on duty for more than 60 hours in seven (7) consecutive days or 70 hours in eight (8) consecutive days. (60 Hour Rule §392.5(b) (1) or 70 Hour Rule – §395(b) (2))

(4) **No Record of Duty Status** (Log Book) - No record of duty status in possession when one is required. (§395.8(a))

(5) **No Previous 7 Days** - Failing to have in possession a record of duty status for the previous (7) consecutive days. (§395.8(k) (2))

(6) **False Record of Duty Status** (log Book) - A required record of duty status that does not accurately reflect the driver's actual activities and duty status (including time and location of each duty status change and the time spent in each duty status) in an apparent attempt to conceal a violation of an hours of service limitation. (§395.8(e))

PART II
VEHICLE OUT-OF-SERVICE CRITERIA

1. BRAKE SYSTEMS

A. DEFECTIVE BRAKES

The number of defective brakes is equal to or greater than 20 percent of the service brakes on the vehicle. A defective brake includes any brake that meets one of the following criteria. (§396.3(a) (1))

NOTE: Steering axle brakes under "Front Steering Axle(s) Brakes," are to be included in the 20 percent criterion.

(1) **Absence of effective braking action** upon application of the service brakes such as brake lining/pad failing to move or contact braking surface upon application.) (§393.48(a))

(2) **Audible Air Leak** at air Chamber. (Example: ruptured diaphragm, loose chamber clamp, etc.) (§396.3(a) (1))

NOTE: Refer to "Air Loss Rate."

(3) **Missing brake on any axle** required to have brakes. (§393.42(a))

(4) **Brake Adjustment Limits.** Bring reservoir pressure between 90 – 100 psi (620 – 690 kPA), turn engine off and then fully apply the brakes. All brake measurement shall be made in 1/8 inch (3.2 mm) increments.

(a) One brake at1/4 inch (6.4 mm) or more beyond the adjustment limit. (Example: Type 30 clamp type air chamber pushrod measured at 2 1/4 inches (57.2 mm) would be one defective brake.) (§393.47(e))

(b) A brake found at 1/8 inch (3.2 mm) beyond the brake adjustment limit shall be considered 0.5 (1/2) a defective brake for determining the number of defective brakes per the 20 percent defective brake criterion. (Example: Type 30 clamp type brake chamber pushrods measure –Two (2) at 2 1/8 inches (54.0 mm) equal to 1 defective brake.) (§393.47(e))

NOTE: When the vehicle is declared out-of-service for 20 percent brake violations, all brakes found beyond the brake adjustment limit must be repaired.

NOTE: When calculating/determining the number of defective brakes, round all fractions down to the next whole number (e.g. 4.5 brake violations = 4 defective brakes).

(c) **Any wedge brake** where the combination brake lining movement of both top and bottom shoes exceeds 1/8 inch (3.2 mm). (§393.47(f))

B. BRAKE ADJUSTMENT LIMIT REFERENCE CHARTS

CLAMP TYPE BRAKE CHAMBER DATA				
TYPE	**OUTSIDE DIAMETER**	**BRAKE ADJUSTMENT LIMIT**	**HALF DEFECT LIMIT**	**FULL DEFECT LIMIT**
6	4 1/2 (114 mm)	1 1/4 (31.8 mm)	1 3/8 (34.9 mm)	1 1/2 (38.1 mm)
9	5 1/4 (133 mm)	1 3/8 (34.9 mm)	1 1/2 (38.1 mm)	1 5/8 (41.3 mm)
12	5 11/16 (145 mm)	1 3/8 (34.9 mm)	1 1/2 (38.1 mm)	1 5/8 (41.3 mm)
16	6 3/8 (162 mm)	1 3/4 (44.5 mm)	1 7/8 (47.6 mm)	2 (50.8 mm)
20	6 25/32 (172 mm)	1 3/4 (44.5 mm)	1 7/8 (47.6 mm)	2 (50.8 mm)
24	7 7/32 (184 mm)	1 3/4 (44.5 mm)	1 7/8 (47.6 mm)	2 (50.8 mm)
30	8 3/32 (206 mm)	2 (50.8 mm)	2 1/8 (54.0 mm)	2 1/4 (57.2 mm)
36	9 (229 mm)	2 1/4 (57.2 mm)	1 3/8 (60.3 mm)	2 1/2 (63.5 mm)

NOTE: Service chambers with housings that are permanently crimped and sealed together are considered clamp type chambers even though they do not have a separate clamp band.

NOTE: A brake found at the adjustment limit is not a defect for the purposes of the 20% rule.

‘LONG STROKE’ CLAMP TYPE BRAKE CHAMBER DATA				
TYPE	**OUTSIDE DIAMETER**	**BRAKE ADJUSTMENT LIMIT**	**HALF DEFECT LIMIT**	**FULL DEFECT LIMIT**
12	5 11/16 (145 mm)	1 3/4 (44.45mm)	1 7/8 (47.6 mm)	2 (50.8 mm)
16	6 3/8 (162 mm)	2 (50.8 mm)	2 1/8 (54.0mm)	2 1/4 (57.2mm)
20 (2.5” rated stroke)	6 25/32 (172 mm)	2 (50.8 mm)	2 1/8 (54.0 mm)	2 1/4 (57.2 mm)
20 (3” rated stroke)	6 25/32 (172 mm)	2 1/2 (63.5 mm)	2 5/8 (66.7 mm)	2 3/4 (69.9 mm)
24 (2.5” rated stroke)	7 7/32 (184 mm)	2 (50.8 mm)	2 1/8 (54.0 mm)	2 1/4 (57.2 mm)
24 (3”rated stroke)	7 7/32 (184 mm)	2 1/2 (63.5 mm)	2 5/8 (66.7 mm)	2 3/4 (69.9 mm)
30	8 3/32 (206 mm)	2 1/2(63.5 mm)	2 5/8 (66.7mm)	2 3/4 (69.9 mm)

NOTE: Rated stroke is indicated on a tag and is only used to identify chamber size.

NOTE: Service chambers with housings that are permanently crimped and sealed together are considered clamp type chambers even though they do not have a separate clamp band.

NOTE: A brake found at the adjustment limit is not a defect for the purposes of the 20% rule.

BOLT TYPE BRAKE CHAMBER DATA				
TYPE	**OUTSIDE DIAMETER**	**BRAKE ADJUSTMENT LIMIT**	**HALF DEFECT LIMIT**	**FULL DEFECT LIMIT**
A	6 15/16 (176 mm)	1 3/8 (34.9 mm)	1 1/2 (38.1 mm)	1 5/8 (41.3 mm)
B	9 3/16 (234 mm)	1 3/4 (44.5mm)	1 7/8 (47.6 mm)	2 (50.8 mm)
C	8 1/16 (205 mm)	1 3/4 (44.5mm)	1 7/8 (47.6 mm)	2 (50.8 mm)

D	5 1/4 (133 mm)	1 1/4 (31.8 mm)	1 3/8 (34.9 mm)	1 1/2 (38.1 mm)
E	6 3/16 (157 mm)	1 3/8 (34.9 mm)	1 1/2 (38.1 mm)	1 5/8 (41.3 mm)
F	11 (279 mm)	2 1/4 (57.2 mm)	2 3/8 (60.3 mm)	2 1/2 (63.5 mm)
G	9 7/8 (251 mm)	2 (50.8 mm)	2 1/8 (54.0 mm)	2 1/4 (57.2 mm)

NOTE: A brake found at the adjustment limit is not a defect for the purposes of the 20% rule.

ROTOCHAMBER DATA				
TYPE	**OUTSIDE DIAMETER**	**BRAKE ADJUSTMENT LIMIT**	**HALF DEFECT LIMIT**	**FULL DEFECT LIMIT**
9	4 9/32 (109 mm)	1 1/2 (38.1 mm)	1 5/8 (41.3 mm)	1 3/4 (44.5 mm)
12	4 13/16 (122 mm)	1 1/2 (38.1 mm)	1 5/8 (41.3 mm)	1 3/4 (44.5 mm)
16	5 13/32 (138 mm)	2 (50.8 mm)	2 1/8 (54.0 mm)	2 1/4 (57.2 mm)
20	5 15/16 (151 mm)	2 (50.8 mm)	2 1/8 (54.0 mm)	2 1/4 (57.2 mm)
24	6 13/32 (163 mm)	2 (50.8 mm)	2 1/8 (54.0 mm)	2 1/4 (57.2 mm)
30	7 1/16 (180 mm)	2 1/4 (57.2 mm)	2 3/8 (60.3 mm)	2 1/2 (63.5 mm)
36	7 5/8 (194 mm)	2 3/4 (69.9 mm)	2 7/8 (73.0 mm)	3 (76.2 mm)
50	8 7/8 (226 mm)	3 (76.2 mm)	3 2/8 (79.4 mm)	3 1/4 (82.6 mm)

NOTE: A brake found at the adjustment limit is not a defect for the purposes of the 20% rule.

DD-3 BRAKE CHAMBER DATA				
TYPE	**OUTSIDE DIAMETER**	**BRAKE ADJUSTMENT LIMIT**	**HALF DEFECT LIMIT**	**FULL DEFECT LIMIT**
30	8 1/8 (206 mm)	2 1/4 (57.2 mm)	2 3/8 (60.3 mm)	2 1/2 (63.5 mm)

NOTE: This chamber has three air lines and is found on motor coaches.

WEDGE BRAKE DATA
The combined movement of both brake shoe lining scribe marks shall not exceed 1/8 inch (3.2 mm).

(5) **Drum (Cam-type and Wedge) Air Brakes**

(a) Missing or broken brake shoe, lining, return spring (shoe or chamber), anchor pin, spider, cam roller, camshaft, pushrod, yoke, clevis pin, brake adjuster, parking brake power spring, or air chamber mounting bolt. (§393.48(a))

(b) Loose air chamber, spider, or camshaft support bracket. (§393.48(a))

(c) Defective Lining Conditions

i. Lining cracks or voids exceed 1/16 inch (1.6 mm) in width observable on the edge of the lining. (§393.47(a))

ii. Portion of a lining segment missing such that a fastening device (rivet or bolt) is exposed when viewing the lining from the edge. (§393.47(a))

iii. Crack that exceeds 1 1/2 inch (38.1 mm) in length. (§393.47(a))

iv. Loose lining segment. (Approximately 1/16 inch (1.6 mm) or more movement) (§393.47(a))

v. Complete lining segment missing. (§393.47(a))

vi. The friction surface of the brake drum and the brake friction material are contaminated by oil or grease. (§393.47(a))

NOTE: Also refer to "Wheels, Rims and Hubs" if wheel is actively leaking.

vii. Lining thickness less than 1/4 inch (6.4 mm) or worn into the wear indicator if lining is so marked, measured at the shoe center. (§393.47(d) (2))

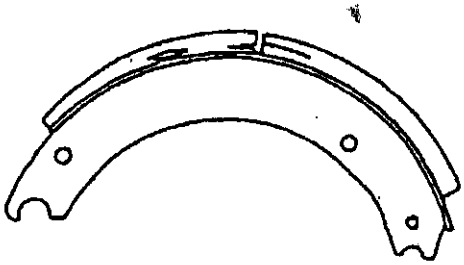

Out-of-Service
Cracks or voids that exceed 1/16" in width
Cracks that exceed 1 1/2 " in length

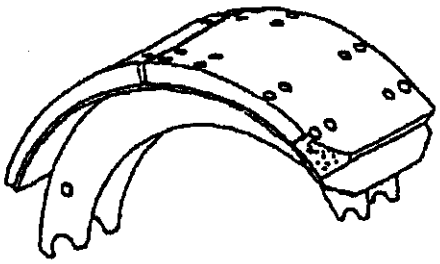

Out-of-Service
Portion of lining missing that exposes a fastening device.

(6) **Air Disc Brakes** (Exposed Pushrods and Direct Coupled – Air Chamber to Caliper)

(a) Missing or broken caliper, brake pad, pad retaining component, pushrod, yoke, clevis pin, brake adjuster, parking brake power spring, chamber return spring, or air chamber mounting bolt. (§393.48(a))

(b) Loose or missing brake chamber or caliper mounting bolt. (§393.48(a))

(c) Rotor has evidence of metal to metal contact on the friction surface. (§393.47(d) (2))

(d) Rotor has severe rusting on the rotor friction surface on either side (light rusting on the friction surface is normal). (§393.48(a))

(e) The friction surface of the brake rotor and the brake friction material are contaminated by oil or grease. (§393.47(a))

NOTE: Also refer to "Wheels, Rims and Hubs" if wheel seal is actively leaking.

(f) Brake pad thickness less than 1/16 inch (1.6 mm) or to wear indicator if lining is so marked. (§393.47(d) (2))

(7) **Hydraulic and Electric Brakes**

(a) Missing or broken caliper, brake pad, shoe, or lining. (§393.48(a))

(b) Movement of the caliper within the anchor plate, in the direction of wheel rotation, exceeds 1/8 inches (3.2 mm). (§393.48(a))

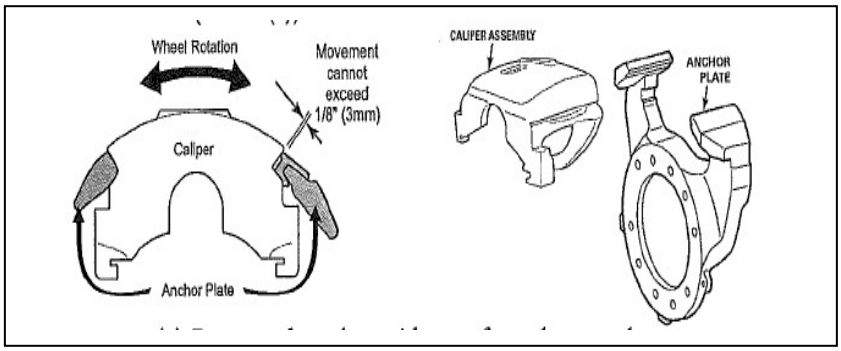

(c) Rotor or drum has evidence of metal to metal contact on the friction surface. (§393.47(d) (2))

(d) Rotor has severe rusting on the rotor friction surface on either side (light rusting on the friction surface is normal). (§393.48(a))

(e) Friction surface of the brake rotor and the brake friction material are contaminated by oil, grease, or brake fluid. (§393.47(a))

NOTE: Also refer to **"**Wheels, Rims and Hubs**"** if wheel seal is actively leaking.

(f) Lining or pad with a thickness of 1/16 inch (1.6 mm) or less for disc or drum brakes. (§393.47(d) (2))

C. FRONT STEERING AXLE(S) BRAKES

In addition to being included in the 20 percent criterion, the following place a vehicle out-of-serve condition:

(1) Any inoperable brake (such as any brake lining/pad failing to move or contact braking surface upon application) or missing brake on either wheel of any steering axle or any vehicle equipped or required to be equipped with steering axle brakes. (Missing §393.42(a) or Inoperable - §393.48(a))

(2) Drum (Cam-Type and Wedge) Air Brakes – (Front Steering Brakes)

(a) Mismatched air chamber sizes. (§393.47(b))

NOTE: Mismatched air chamber versus regular stroke air chamber and excludes differences in design type such as type 20 clamp versus type 20 rotochamber. A bolt chamber with any chamber type is a mismatch.

(b) Mismatched brake adjuster length. (§393.47(c)) (c)

(c) Defective Lining Conditions

i. Lining cracks or voids that exceed 1/16 inch (1.6 mm) in width observable on the edge of the lining. (§393.47(a))

ii. Portion of a lining segment missing such that a fastening device (rivet or bolt) is exposed when viewing the lining from the edge. (§393.47(a))

iii. Crack exceeds 1 1/2 inch (38.1 mm) in length. (§393.47(a))

iv. Loose lining segment. (Approximately 1/16 inch (1.6 mm) or more movement) (§393.47(a))

v. Complete lining segment missing. (§393.47(a))

vi. The friction surface of the brake drum and the brake friction material are contaminated

by oil or grease. (§393.47(a))

NOTE: Refer to "Wheels, Rims and Hubs" if wheel seal is actively leaking.

vii. Lining with thickness less than 3/16 inch (4.8 mm) for a shoe with a continuous strip of lining or ¼ inch (6.4mm) for a shoe with two lining blocks for drum brakes or worn into the wear indicator if lining is so marked. (§393.47(d) (1))

(3) Air Disc Brakes (Exposed Pushrods and Direct Coupled – Air Chamber to Caliper) – Front Steering Axle)

(a) Mismatched air chamber sizes. (§393.47(b))

NOTE: Mismatched air size excludes long stroke air chamber versus regular stroke air chamber. A mismatch on an air disc brake exists only when there is measurable difference in air chamber clamp sizes.

(b) Mismatched brake adjuster length (§393.47(c))

(c) Missing brake pad. (§393.47(a))

(d) Rotor has evidence of metal to metal contact on the rotor friction surface. (§393.48(a))

(e) Rotor has severe rusting on the rotor friction surface on either side (light rusting on the friction surface is normal). (§393.48(a))

(f) The friction surface of the brake rotor and the brake friction material are contaminated by oil or grease. (§393.47(a))

NOTE: Refer to "Wheels, Rims and Hubs" if wheel seal is actively leaking.

(g) Brake pad thickness less than 1/16 inch (1.6 mm) or to wear indicator if lining is so marked. (§393.47(d) (1))

(4) Hydraulic Brakes – (Front Steering Brakes)

(a) Missing lining or pad. (§393.47(a))

(b) Movement of the caliper within the anchor plate, in the direction of wheel rotation, exceeds 1/8 inches (3.2 mm). (§393.48(a)

(c) Rotor has evidence of metal to metal contact on the rotor friction surface (§393.48(a))

(d) Rotor has severe rusting on the rotor friction surface on either side (light rusting on the friction surface is normal). (§393.48(a))

(e) The friction surface of the brake drum or rotor and the brake friction material are contaminated by oil, grease, or brake fluid. (§393.47(a))

NOTE: Refer to "Wheels, Rims and Hubs" if wheel seal is actively leaking.

(f) Pad with a thickness 1/16 inch (1.6 mm) or less for disc brakes. (§393.47(d) (1))

END OF 20% BRAKE CRITERION

D. SPRING BRAKE CHAMBERS

Any non-manufactured holes or cracks in the spring brake housing section of a parking brake. (§396.3(a) (1))

E. PARKING BRAKE

No brakes on the vehicle are applied upon actuation of the parking brake control, including driveline hand-controlled parking brakes. (§393.41)

F. BRAKE SMOKE/FIRE

Brake malfunction causing smoke or fire to emit from the wheel end. (§393.48)(A))

Example: Brake lining continuously in contact with brake drum or

rotor.

NOTE: This does not include overheating due to severe brake use.

NOTE: Refer to "Wheels, Rims and Hubs;" as the cause may either be the brakes or a problem in the hub and bearing area.

G. BRAKE DRUMS OR ROTORS (Disc)

(1) **Any portion of the drum has any external crack, or has any crack that opens upon brake application. (§393.47(a))

(2) **Any rotor (disc) with a crack in length of more than 75 percent of the friction surface and passes completely through the rotor to the center vent from either side or completely through a solid rotor. (§393.47(a))

(3) A rotor surface is worn to or through center vents. (§393.47(g))

(4) Any portion of the drum or rotor (discs) missing or in danger of falling away. (§393.47(a))

****NOTE:** Do not confuse short hairline heat check cracks with flexural cracks.

H. BRAKE HOSE/TUBING

(1) Any damage extending through the outer reinforcement ply. (§393.45(a))

NOTE: Rubber impregnated fabric cover **is not** a reinforcement ply.

NOTE: Thermoplastic nylon tube may have braid reinforcement or color difference between cover and inner tube. Exposure of second color is out-of-service condition.

(2) Bulge/swelling when air pressure is applied. (§393.45(a))

(3) Audible leak at other than a proper connection. (§393.45(a))

(4) Improperly joined such as a splice made by sliding the hose ends over a piece of tubing and clamping the hose to the tube. (§393.45(a))

(5) Damaged by heat, broken, or crimped in such a manner as to restrict air flow. (§393.45(a))

I. AIR PRESSURE GAUGE

Inoperative or defective primary or secondary air pressure gauge. (§393.51(c))

J. LOW AIR PRESSURE WARNING DEVICE

Low air pressure warning device missing, inoperative, or does not operate continuously if either the primary or secondary reservoir is at 55 psi (379 kPa) and below, or 1/2 of the governor cut-out pressure, whichever is less. (§393.51(c))

NOTE: If either an audible or visual warning device is working as required, vehicle should not be placed out-of-service.

K. AIR LOSS RATE

If an air leak is discovered and either the primary or secondary reservoir pressure is not maintained when: (§396.3(a) (1))

(1) Governor is cut-in;

(2) Reservoir pressure is between 80 - 90 psi (551-620 kPa);

(3) Engine is at idle; **and**

(4) Service brakes are fully applied.

L. AIR RESERVOIR (TANK)

An air reservoir (tank) separated at either end from its original attachment point(s) allowing movement of more than 1 inch (25.4 mm) in any direction. (§396.3(a) (1))

M. AIR COMPRESSOR (Normally to be inspected when readily visible or when conditions indicate compressor problems.)

(1) Loose compressor mounting bolts. (§396.3(a) (1))

(2) Cracked, broken, or loose pulley. (§396.3(a) (1))

(3) Cracked or broken mounting brackets, braces, or adapters. (§396.3(a) (1))

N. HYDRAULIC BRAKES

(1) The fluid level in any master cylinder reservoir is less than 1/4 full or below minimum marking. (§396.3(a) (1))

NOTE: Normally to be inspected when readily visible or problems are apparent.

(2) Hydraulic or vacuum lines, hoses, or connections are restricted, crimped, broken, or damaged through the outer reinforcement ply. (Restricted/Crimped/Broker–§393.45(a) or Damaged–(§393.45(b) (2))

NOTE: Rubber impregnated fabric cover is not a reinforcement ply.

(3) Any observable seepage, bulge, or swelling on a brake hose under application pressure. (§393.45(a))

(4) Any observable leaking hydraulic fluid in the brake system upon full application. (§393.45(a))

(5) No pedal reserve with engine running upon full brake application. (§393.40(b))

(6) Brake power assist unit is inoperative. (§396.3(a) (1))

(7) Hydraulic power brake (HPB) unit is inoperative. (§396.3(a) (1))

(8) Brake failure warning system is missing, inoperative, disconnected, defective or activated while the engine is running with or without brake application. (§393.51(b))

(9) The hydraulic brake backup system is inoperative. (§396.3(a)(1))

O. VACUUM BRAKES

(1) Insufficient vacuum reserve to permit one full brake

application after engine is shut off. (§393.50(b))

(2) Vacuum hose(s) or line(s) restricted, abraded (chafed) through outer cover-to-cord ply, crimped, cracked, broken, or has collapse of vacuum hose(s) when vacuum is applied. (§393.45(b)(2))

2. ELECTRICAL CABLES AND SYSTEMS IN ENGINE AND BATTERY COMPARTMENTS

A. Electrical cable insulation chafed, frayed, damaged, burnt, causing bare cable to be exposed. (§393.28)

B. Missing or damaged protective grommets insulating electrical cables through metal compartment~~s~~ panels. (§393.28)

C. Broken or unsecured mounting of electrical components. (§396.3(a)(1))

D. Electrical cables unsupported, hanging or missing clamps that may cause a chafing or frayed condition. (§393.28)

E. Any visual leaking of lubricant (i.e., engine supplied oil pressure) from electrical component such as alternator, auxiliary heater, etc. (§396.5(b))

NOTE: A cable is the power-conveying part of a high wattage/voltage electrical system. It usually has no circuit overload protection included in the system (i.e. battery to electrical starter or alternator to battery).

3. EMERGENCY EQUIPMENT

A. FIRE EXTINGUISHER

Any vehicle whose fire extinguisher is missing, has an out-of-date certification, not equipped with at least one type 2A 10 BC, 5-pound pressurized, dry chemical fire extinguisher, not fully charged, has no pressure gauge, is not secured or is not readily accessible to the driver. (§393.95)

B. FIRST AID and BODY FLUID KIT

Any vehicle that does not have a first aid kit and body fluid kit that is readily accessible and labeled.

C. EMERGENCY WARNING DEVICES

Any vehicle not equipped with at least three reflectorized triangle road warning devices.

4. EMERGENCY EXITS

A. Any emergency door, window or roof hatch that fails to open freely or completely as defined in 571.217.

B. Door prop-rod device is missing or inoperative.

C. An emergency exit equipped with a padlock or similar locking device (excludes interlock systems).

D. Any bus that lacks the required number of emergency exit required in Nevada School Bus Standards at the time the bus was manufactured.

E. Any emergency exit not properly labeled and marked both inside and outside the vehicle.

F. Emergency exit warning device/buzzer is not audible when raised to an open position.

G. Any emergency exit door~~s~~ that is not accessible by a 12 inch minimum aisle or obstructed by a barrier, seat, wheelchair or tie down unless a flip seat is installed and occupied. A flip seat in the unoccupied (up) position shall not obstruct the 12 inch minimum aisle to any side emergency door and must be fully operational and flip up with slight hand pressure.

H. Any emergency exit equipped with a starter interlock that is non-operational.

5. EXHAUST SYSTEM

A. Any exhaust system leaking or discharging directly below the driver or passenger compartment. (§393.83)(e)) (NCST, page 78,

www.ncstonline.org)

NOTE: Engine must be running to verify exhaust leaks.

NOTE: Does not apply to proper venting for emission systems as designed by the manufacturer.

B. No part of the exhaust system shall be located and likely to result in burning, charring, or damaging the electrical wiring, the fuel supply, or any combustible part of the motor vehicle. (§393.83(a))

6. FRAME & BODY

A. FRAME MEMBERS

(1) Any cracked, loose, sagging, or broken frame siderail permitting shifting of the body onto moving parts or other condition indicating an imminent collapse of the frame. (§393.201(a))

(2) Any cracked, loose, or broken frame member adversely affecting support of functional components such as steering gear, engine, transmission, body parts and suspension. (§393.201(a))

(3) One and one-half inches (38 mm) or longer crack in frame siderail web which is directed toward bottom flange. (§393.201(a))

(4) Any crack extending from the frame siderail web around the radius and into the bottom flange. (§393.201(a))

(5) One inch (25 mm) or longer crack in siderail bottom flange. (§393.201(a))

NOTE: Items (1) and (2) above apply to all buses, including those having unitized (monocoque) construction. Items (3) and (4) apply only to buses having a body-on-chassis design, such as most school buses.

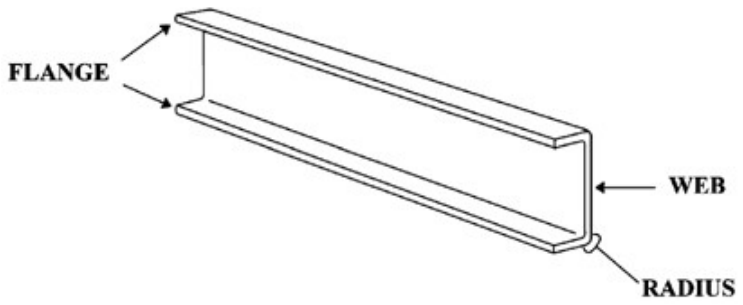

B. TIRE and WHEEL CLEARANCE

Any condition, including loading, that causes the body or frame to contact with a tire or any part of the wheel assemblies, at the time of inspection (§396.3(a)(1))

C. ROOF/BODY STRUCTURE (Applicable only to Carpenter School Buses)

(1) Any body structure area (roof bow/Carlin rail/window post) that is cracked.

(2) Any body structure area (roof bow/Carlin rail/window post) that has been welded and has cracked again, or additional cracks appear in the structural area after initial welding has occurred, is permanently scrapped.

(3) Any body structure area (roof bow/Carlin rail/window post) where 20% or more of the structural area is cracked, will be scrapped.

(4) Any lower Carlin rail that is cracked all the way through will be scrapped.

NOTE: Carpenter buses roof/body structure will be required to be inspected yearly.

7. FUEL SYSTEM

A. LIQUID FUELS

(1) A fuel system with a dripping leak at any point (including refrigerator or heater fuel systems). (§396.3(a)(1))

(2) A fuel tank not securely attached to the vehicle. (§393.65(c))

NOTE: Some fuel tanks use spring or rubber bushings to permit movement.

(3) Vehicle missing fuel cap. (393.67(c)(7)(v))

B. GASEOUS FUELS

Compressed Natural Gas (CNG), liquefied Petroleum Gas (LPG) and Liquefied Natural Gas (LNG)

OCCUPATIONAL SAFETY NOTE: Personnel must exercise extreme caution whenever checking a gaseous fuel system for leaks. Any possibility of creating sparks, static electricity, friction, etc., must be avoided as they could cause a fire or explosion.

OCCUPATIONAL SAFETY NOTE: Vehicles with leaking gaseous fuel systems must be parked carefully. Gases escaping from CNG and LNG systems will rise. If the vehicle is parked inside a building or under a canopy, roof or similar cover, combustible gasses can collect beneath the ceiling. Escaping LPG falls and can form a "pool" of combustible gas near the ground and displaces air including oxygen. LPG and liquid LNG will flow into open drains. Combustible gases can explode when ignited by an open flame or spark.

(1) **CNG or LPG**

(a) Any fuel leakage from the CNG or LPG system detected by smell and verified by either a bubble test using non-ammonia, non-corrosive soap solution or a flammable gas detection meter. (§396.3(a)(1))

(b) Any fuel leakage from the CNG or LPG system detected audibly and verified by either a bubble test using non- ammonia, non-corrosive soap solution or

flammable gas detection meter. (§396.3(a)(1))

NOTE: Verification is needed to ensure that the sound is not either internal to the fuel system (such as gas flowing in a pressure regulator, or pressure equalizing between manifold tanks) or a leak in the air brake system.

(c) Any fuel leakage from the CNG or LPG system detected visibly (evidence such as ice buildup or fuel system connections and fittings) and verified by either a bubble test using non-ammonia, non-corrosive soap solution or a flammable gas detection meter. (§396.3(a)(1))

NOTE: Some brief fuel leakage or decompression may occur during refueling, causing temporary frosting of CNG or LPG fuel system parts. If the vehicle has been refueled shortly before inspection, care must be taken to distinguish these temporary frosting occurrences from actual leaks.

(2) **LNG**

OCCUPATIONAL SAFETY NOTE: LNG is a cryogenic material and presents a potential safety hazard due both to the extremely cold temperature of its liquid and the flammability of its vapor. Personnel inspecting such systems should exercise utmost caution including the wearing of proper eye protection, gloves and clothing.

NOTE: LNG liquid and vaporized gas is odorless and undetectable by the human sense of smell. Frost buildup is not necessarily evidence of leakage. Many components of LNG fuel systems are extremely cold and will exhibit an even coat of frost produced by moisture in the surrounding air condensing and freezing on them.

(a) A cloud of water vapor coming from any component of the fuel system. (§396.3(a)(1))

NOTE: It is normal, particularly in humid conditions, for water vapor to collect around many portions of a LNG fuel system.

(b) Any leak detected by a methane detection meter. (§396.3(a)(1))

(c) Dripping liquid that boils or vaporizes in the air. (§396.3(a)(1))

8. LIGHTING DEVICES (HEADLAMPS, TAIL LAMPS, STOP LAMPS, TURN SIGNALS AND LAMPS AND BACK-UP WARNING ALARM)

A. HEADLAMPS

The bus does not have at least one head lamp operating on low beam. (Inoperative – (§393.9(a); Obscured – (§393.9(b); Missing – (§393.11(a)(1); or, Driveaway – (§393.17(a)(1))

B. LAMPS ON REAR

The bus does not have at least one steady burning tail lamp on the rear of the vehicle, visible from 500 feet (152.4m). (Inoperative – (§393.9(a); Obscured – (§393.9(b); Missing – (§393.11(a)(1); or, Driveaway – (§393.17(b)(2))

C. STOP LAMP

Does not have at least one operative stop lamp on the rear of a vehicle, visible at 500 feet (152.4m). (Inoperative – (§393.9(a); Obscured – (§393.9(b); Missing – (§393.11(a)(1); or, Driveaway – (§393.17(b)(2)

D. TURN SIGNALS

Does not have operative turn signals visible on each side of the rear of the vehicle. (Inoperative – (§393.9(a)); Obscured – (§393.9(b)); Missing – (§393.11(a)(1)); or, Driveaway – (§393.17(b)(2))

E. FOUR-WAY HAZARD LIGHTS

Four-way hazard lights do not fully operate in the front and rear if the vehicle.

F. OVERHEAD AMBER FLASHING LIGHTS

Overhead amber flashing lights do not fully operate when door is closed.

G. OVERHEAD RED FLASHING LIGHTS

Overhead red flashing lights do not fully operate when vehicle is stopped and the loading/unloading door is open.

H. BACK-UP WARNING ALARM

The back-up warning alarm is not operating.

9. MISCELLANEOUS

A. AISLES

Any aisle that is obstructed or has objects blocking the exits.

B. AEROSOL CANS

Any aerosol cans stored in the passenger compartment.

C. CROSSING CONTROL ARM

Any vehicle not equipped with a crossing control arm, or any vehicle whose crossing control arm is non-operational.

D. DEFROSTERS

Any vehicle whose defrosters are not operational in inclement weather.

E. DOOR, ENTRANCE

Door does not properly open and close without any obstruction or movement and maintain an open or closed position.

F. FLOORS

Any floor not maintained to prevent slipping or tripping.

G. HANDRAILS

Any vehicle whose handrails have not been modified to ensure that hood cords, back pack straps or belts will not become entangled.

H. HORN

Any vehicle whose horn does not work.

I. MIRRORS

(1) Any mirror required that is missing, damaged, clouded or obscured.

(2) Any mirror system that fails to hold a set adjustment.

J. SEATS and BARRIERS

(1) Any seat or barrier that is not securely attached to the vehicle.

(2) Any seat/cushion that is not secured properly.

(3) Any seat or barrier material so defective that it compromises the integrity of occupant protection and compartmentalization.

K. SEAT (DRIVER)

(1) Driver seat is not securely fastened to vehicle and/or fails to maintain adjusted position (§393.93).

(2) Any part of the driver's safety restraint assembly is missing, not properly installed or defective as to prevent proper securement of driver. (§393.93)(a)(b)) (§571.209)

L. SEAT BELTS

When required, all seat belts and restraining devices shall be free from defects.

M. STEP WELL

Any part of the step well that is loose, torn or damaged that would present a tripping hazard. (www.ncstonline.org)

N. STOP SIGNAL ARM(S)

(1) Any vehicle whose stop signal arm(s) does not fully extend either automatically or manually when activated, or does not have at least one operable warning lamp.

(2) Any vehicle equipped with a LED light system, where at least 15% of the LED lights are inoperable.

O. WHEELCHAIR-LIFT EQUIPPED BUSES

(1) Wheelchair lift does not function as designed or is inoperable.

(2) Any hydraulic line leaking during operation.

(3) Any wheelchair lift whose brake interlock system, if equipped, is non-operational.

(4) Any wheelchair lift with a platform barrier/roll stop that is non- operational.

(5) Any wheelchair restraint system that is missing, incomplete, improperly installed or damaged.

(6) Any wheelchair restraint system that is not secured to the bus.

P. WINDOWS

(1) Any glass that that is broken through.

(2) Driver's side window(s) that have chips, clouding, or cracks that obscure the driver's vision.

10. STEERING MECHANISM

A. STEERING WHEEL LASH (FREE PLAY)

(See chart below: When any of these values - inch movement or degrees - are met or exceeded, vehicle shall be placed out-of-service.) (393.209(b))

For power steering systems, the engine must be running.

Steering Wheel Diameter	Manual System Movement 30º	Power System Movement 45º
16" (40.6 cm)	4 1/2" (11.4 cm)(or more)	6 3/4" (17.1 cm)(or more)
18" (45.7 cm)	4 3/4" (12 cm)(or more)	7 1/8" (18.1 cm) (or more)
19" (48.2 cm)	5 1/4" (13.3 cm)(or more)	7 1/2" (19 cm)(or more)
20" (50.8 cm)	5 1/2" (13.9 cm)(or more)	7 7/8" (20 cm)(or more)
21" (53.3 cm)	5 1/2" (13.9 cm)(or more)	8 1/4" (20.9 cm) (or more)
22" (55.8 cm)	5 3/4" (14.6 cm)(or more)	8 5/8" (21.9 cm)(or more)

For power systems, if steering wheel movement exceeds 45 degrees before steering axle tires move, proceed as follows: Rock steering wheel left to right between points of power steering valve resistance. If that motion exceeds 30 degrees (or the inch movement values shown for manual steering) vehicle shall be placed out-of-service. This test is to differentiate between excessive lash and power systems designed to avoid providing steering assistance when the steering wheel is turned while the vehicle is motionless (not moving forward or backward).

B. STEERING COLUMN

(1) Any absence or looseness of U-bolt(s) or positioning part(s). (§393.209(c))

(2) Obviously repair-welded universal joint(s). (§393.209(d))

(3) Steering wheel not properly secured.

(§393.209(a))

(4) Telescopic steering column does not lock into position. (§396.3(a)(1))

(5) Tilt steering column does not lock in at least one position. (§396.3(a)(1))

C. FRONT AXLE BEAM AND ALL STEERING COMPONENTS OTHER THAN STEERING COLUMN (Including hub)

(1) Any crack(s). (§396.3(a)(1))

(2) Any obvious welded repair(s). (§396.3(a)(1))

D. STEERING GEAR BOX (Including Rack and Pinion)

(1) Any mounting bolt(s) loose or missing. (§393.209(d))

(2) Any crack(s) in gear box or mounting brackets. (§393.209(d))

(3) Any obvious welded repairs. (§396.3(a)(1))

(4) Any looseness of the yoke-coupling to the steering gear input shaft. (§393.209(d))

E. PITMAN ARM

(1) Any looseness of the pitman arm on the steering gear output shaft. (393.209(d))

(2) Any obvious welded repairs(s). (§396.3(a)(1))

F. POWER STEERING

(1) Auxiliary power assist cylinder loose. (§393.209(e))

(2) Evidence of power steering fluid leaking steadily (showing little variation or fluctuation) from any component in the system. This includes any component that shares the reservoir to the power steering system.

G. BALL and SOCKET JOINTS

(1) Any movement under steering load of a stud nut. (§393.209(d))

(2) Any motion, other than rotational, between any linkage member and its attachment point of more than 1/8 inch (3.2 mm) measured with hand pressure only. (§393.209(d))

(3) Any obvious welded repair(s). (§393.209(d))

H. TIE RODS and DRAG LINKS

(1) Loose clamp(s) or clamp bolt(s) on tie rods or drag links. (§396.3(a)(1))

(2) Any looseness in any threaded joint. (§396.3(a)(1))

I. NUTS

Loose or missing on tie rods, pitman arm, drag link, steering arm, or tie rod arm. (§396.3(a)(1))

J. STEERING SYSTEM

Any modification or other condition that interferes with the free movement of any steering component. (§393.209(d))

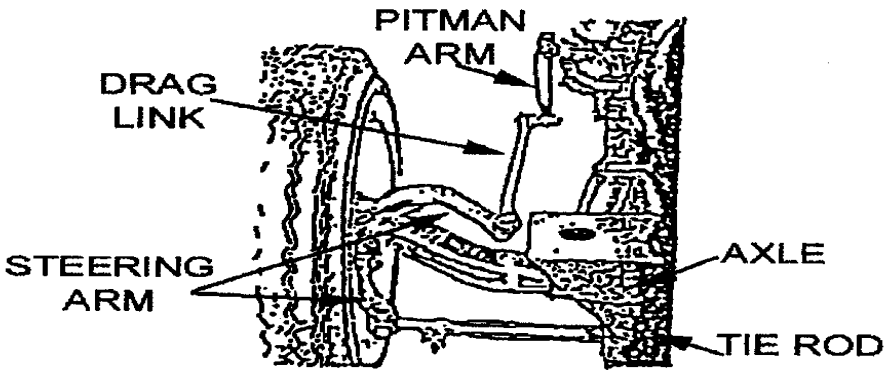

11. SUSPENSION

A. AXLE PARTS/MEMBERS

(1) Any U-bolt(s) or other spring to axel clamp bolt(s) cracked, broken, loose or missing. (§393.207(a))

(2) Any axle, axel housing, spring hanger(s), or other axle positioning part(s) cracked, broken, loose, or missing resulting in shifting of an axel from its normal position. (§393.207(a))

NOTE: After a turn, lateral axle displacement is normal with some suspensions including composite springs mounted on steering axles.

B. SPRING ASSEMBLY

(1) One-fourth or more of the leaves in any spring assembly broken. (§393.207(c))

(2) Any leaf or portion of any leaf in any spring assembly is missing or separated. (§393.207(c))

(3) Any broken main leaf in a leaf spring. (393.207(c))

NOTES:

1. Any leaf of leaf spring assembly is a main leaf if it extends, at both ends, to or beyond:

   a. The load bearing surface of a spring hanger or equalizer.

   b. The spring end cap or insulator box mounted on the axle.

   c. A spring eye, further: Any leaf or a helper spring assembly is a helper main leaf if it extends, at both ends, to or beyond the load bearing surface of its contact pad, hanger, or equalizer.

2. The radius rod leaf, in springs having such a leaf, has the same function as the torque or radius components referenced in "Suspensions - Torque, Radius, Tracking or Sway Bar Components" and should be treated as such a component for purposes of out-of-service.

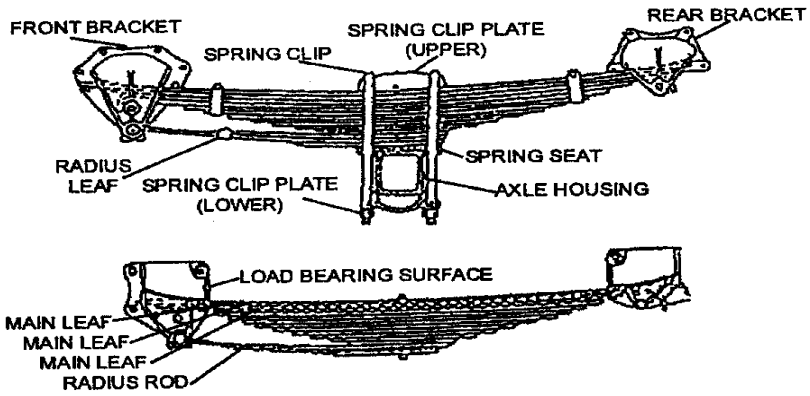

(4) Coil spring broken. (§393.207(d))

(5) Rubber spring missing. (§393.207(a))

(6) One or more leaves displaced in a manner that could result in contact with a tire, rim, brake, drum, or frame. (§393.207(c))

(7) Broken torsion bar spring in torsion bar suspension. (§393.207(e))

(8) Deflated air suspension (one or more deflated air spring/bag). (§393.207(f))

C. COMPOSITE SPRINGS

(1) Intersecting cracks of any length. (§393.207(c))

(2) A crack that extends beyond 3/4 the length of the spring. (§393.207(c))

NOTE: A crack is a separation in any axis which passes completely through the spring.

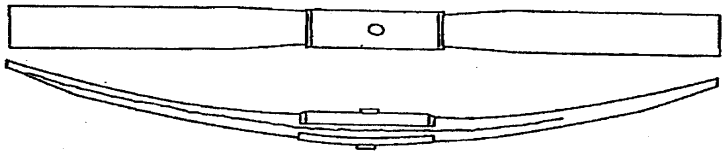

a) Side to side crack extending beyond 3/4 of the length of the spring. (A crack that extends beyond 3/4 the length of the spring.)

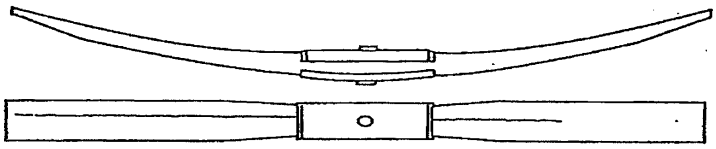

b) Top to bottom crack extending beyond 3/4 of the length of the spring. (A crack that extends beyond 3/4 the length of the spring.)

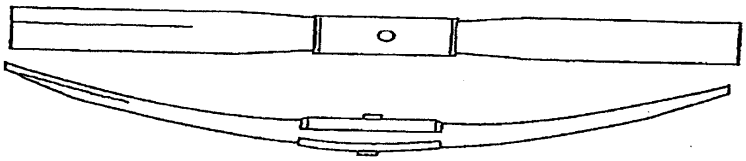

c) Intersecting cracks of any length.

D. TORQUE, RADIUS OR TRACKING COMPONENTS

Any part of a torque, radius, or tracking component assembly or any part used for attaching same to the vehicle frame or axle that is cracked, loose, broken, or missing (including spring leaves used as a radius or torque rod, missing bushings but not loose bushings in torque or track rods). (§393.207(a))

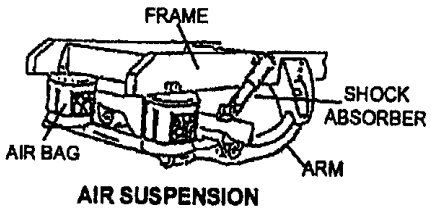

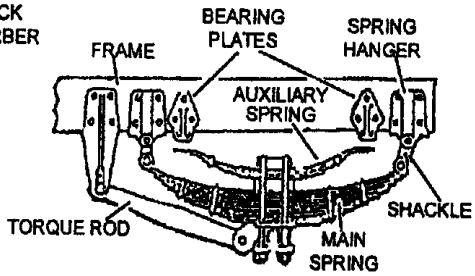

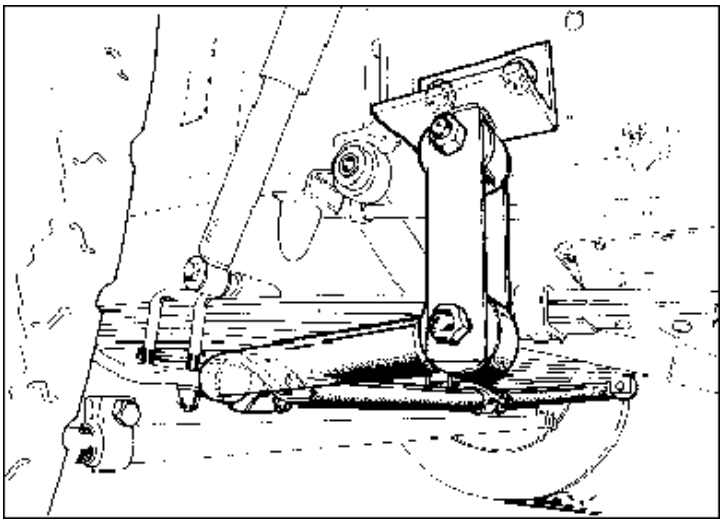

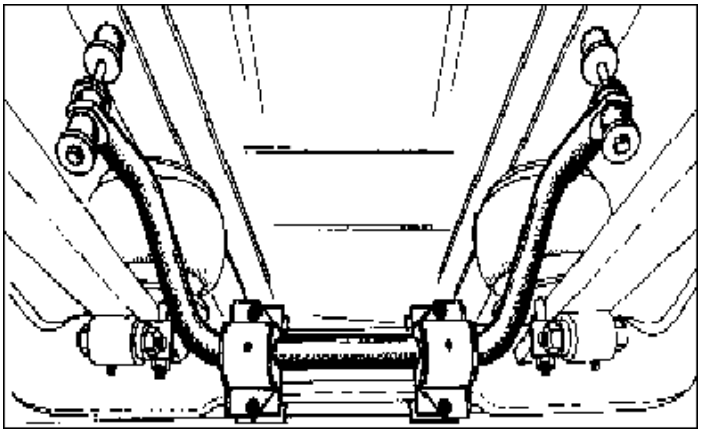

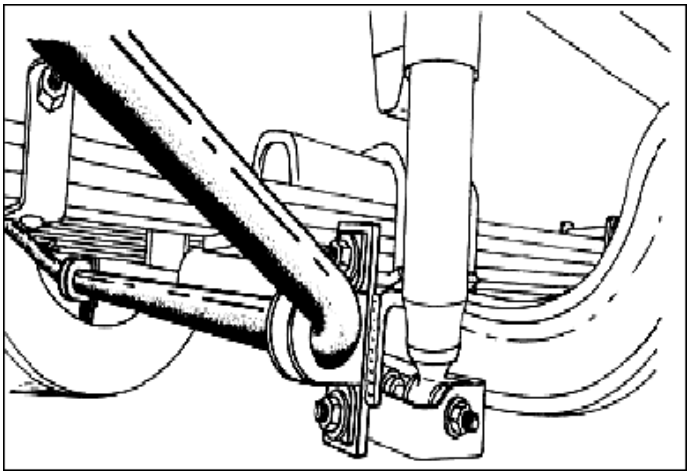

12. TIRES

A. ANY TIES ON ANY FRONT STEERING AXLE

(1) With less than 4/32 inch tread when measured in any two adjacent major tread grooves (typically any groove containing a tread wear indicator) at any location on the tire. (§393.75(b))

NOTE: Measurements should not be made on stone ejectors or tread wear indicators.

(2) When any part of the belt material, breaker strip or casing ply is showing in the tread. (§393.75(a)(1))

(3) When sidewall is cut, worn, or damaged to the extent that the steel or fabric ply cord is exposed. (§393.75(a)(1))

(4) Labeled "Not For Highway Use" or carrying other markings that indicate excluded use on steering axles. (§396.3(a)(1))

(5) Visually observable bump, bulge, or knot apparently related to tread or sidewall separation. (§393.75(a)(2))

EXCEPTION: A bulge (due to a repair) of up to 3/8 inch (9.5 mm) in height is allowed. This bulge may sometimes be identified by a blue triangular label in the immediate vicinity.

(6) Presence of rubber coated cord or cured rubber plug in the sidewall. (§396.3(a)(1))

(7) Tire has noticeable (e.g., can be heard or felt) leak, or has 50

percent or less of the maximum inflation marked on the tire sidewall. (§393.75(a)(3))

NOTE: Measure tire air pressure only if there is evidence the tire is under- inflated.

(8) So mounted or inflated that it comes in contact with any part of the vehicle. (§396.3(a)(1))

NOTE: An out-of-service condition exists only if the tire can be made to contact another component at the time of inspection.

(9) Weight carried exceeds tire load limit. This includes overloaded tire resulting from low air pressure. (Load Limit – (§393.75(f) or Inflation Pressure – (§393.75(h))

(10) Any vehicle that bias and radial tires have been combined.

(11) Any vehicle with re-grooved, recapped, or retread tires. (§393.75(d))

B. ALL TIRES OTHER THAN THOSE FOUND ON THE FRONT STEERING AXLE

(1) Tire has noticeable (e.g., can be heard or felt) leak, or has fifty (50) percent or less of the maximum inflation pressure marked on the tire sidewall. (§393.75(a)(3))

NOTE: Measure tire air pressure only if there is evidence the tire is under- inflated.

(2) Any tire with visually observable bump or knot apparently related to tread or sidewall separation. (§393.75(a)(2)

EXCEPTION: A bulge (due to a repair) of up to 3/8 inch (9.5 mm) in height is allowed. The bulge may sometimes be identified by a blue triangular label in the immediate vicinity.

(3) So mounted or inflated that it comes in contact with any part if the vehicle. (§396.3(a)(1))

NOTE: This includes any tire contacting its mate in a dual set.

(4) Weight carried exceeds tire load limit. This includes overloaded tire resulting from low air pressure. (Load Limit – (§393.75(f)); (§393.75(g)(1)); (§393.75(g)(2)); or, Inflation Pressure (§393.75(h))

(5) Seventy-five (75) percent or more of the tread width loose or missing in excess of 12 inches (30.4 cm) in circumference. (§393.75(a)(2))

(6) **Bias Ply Tire:** When more than one ply is exposed in the sidewall and the area exceeds 2 square inches (12.9 sq cm). (§393.75(a)(1))

(7) Radial Ply Tire**:** When more than one ply is exposed in the sidewall and the area exceeds 2 square inches (12.9 sq cm.) (§393.75(a)(1))

NOTE: The following conditions apply to all tires; however, when these conditions are found on a dual tire set, both tires must meet one or more of the conditions listed in item 10.

(8) Bias Ply Tire: When more than one ply is exposed in the tread area and the exposed area of the top ply exceeds 2 square inches (12.9 sq cm or damaged plies are evident in the sidewall up to 2 square inches (12.9 sq cm). (§393.75(a)(1))

(9) Radial Ply Tire: When two or more plies are exposed in the tread area and the exposed area of the top ply exceeds 2 square inches (12.9 sq cm) or damaged cords are evident in the sidewall up to 2 square inches (12.9sq cm). (§393.75(a)(1))

(10) Presence of rubber coated cord or cured rubber plug in the sidewall. (§396.3(a)(1))

(11) So worn that less that 2/32 inch (.8 mm) tread remains when measured in any two adjacent major tread grooves (typically any groove containing a tread wear indicator) at 3 separate locations around the circumference of the tire at least 8 inches apart. (§393.75(c))

NOTE: Measurements should not be made on stone ejectors or tread wear indicators.

13. WHEELS, RIMS and HUBS

A. LOCK or SIDE RING

Bent, broken, cracked, improperly seated, sprung, or mismatched ring(s). (§393.205(a))

B. RIM CRACKS

Any circumferential crack. (§393.205(a))

C. DISC WHEEL CRACKS

(1) Any crack exceeding 3 inches (76.2 mm) in length. (§393.205(a))

(2) A crack extending between any two holes (hand holes, stud holes and center holes). (§393.205(a))

(3) Two or more cracks anyplace on the wheel. (§393.205(a))

D. BOLT/STUD HOLES (Disc Wheels)

Any visible elongated bolt/stud hole. (§393.205(b))

E. SPOKE WHEEL CRACKS

(1) Two or more cracks more than 1 inch (25.4 mm) long across spoke or hub section. (§393.205(a))

(2) Two or more web areas with cracks. (§393.205(a))

F. TUBELESS DEMOUNTABLE ADAPTER CRACKS

(1) A crack exceeding 3 inches (76.2 mm). (§393.205(a))

(2) Cracks at three or more spokes. (§393.205(a))

G. WHEEL FASTNERS

Loose, missing, broken, cracked, or stripped wheel fasteners that are ineffective as follows: for 10 fastener positions - 3 anywhere or 2 adjacent; for 8 fastener positions or less - 2 anywhere (this applies to both spoke and

disc wheels). (§393.205(c))

H. WELDS

(1) Any cracks in welds attaching disc wheel disc to rim. (§393.205(a))

(2) Any crack in welds attaching tubeless demountable rim to adapter. (§393.205(a))

(3) Any welded repair on any aluminum wheel(s). (§396.3(a)(1))

(4) Any welded repair other than disc to rim attachment on steel disc wheel(s). (§396.3(a)(1))

I. HUBS

(1) When any axle bearing (hub) cap, plug or filler plug is missing or broken allowing an open view into hub assembly. (§396.3(a)(1)

(2) Smoking from wheel hub assembly due to bearing failure. (§396.3(a)(1)

NOTE: Also refer to "Brake Systems – Brake Smoke/Fire;" as the cause may either be the brakes or a problem in the hub and bearing area.

(3) When any wheel seal is leaking. This must include evidence of wet contamination of the brake friction material and accompanied by evidence that further leaking will occur. (§396.5(b))

NOTE: Refer to the applicable contaminated friction material criterion in "Brake Systems," when condition is present.

NOTE: Grease/oil on the brake lining edge, back of shoe, or drum edge and oil stain with no evidence of fresh oil leakage are not conditions for out-of-service.

(4) Lubricant is leaking from the hub and is present on the wheel surface (caused by a loose hub cap or hub cap bolts, or hub cap damage) accompanied by evidence that further leakage will

occur. (§396.5(b))

(5) No visible or measurable amount of lubricant showing in hub. (§396.5(a))

14. WINDSHIELD WIPERS

Any school bus that has an inoperable wiper or missing, or damaged parts that renders it ineffective. (§393.78(b))