Climate Change Revisions to Nevada's Wildlife Action Plan:
Vegetation Mapping and Modeling
Report to the Nevada Department of Wildlife
May 2011

Photo: Salt desert to subalpine—Ward Mountain Nevada; L. Provencher, 2009

By
Louis Provencher and Tanya Anderson
The Nature Conservancy
Reno, Nevada

TABLE OF CONTENTS

EXECUTIVE SUMMARY **6**

INTRODUCTION **10**

METHODS **11**

VEGETATION MAPPING 11
ASSESSING FUTURE CONDITION 15
Modeling by Regions of Nevada *15*
Predictive Ecological Models *17*
Overview of Climate Change Modeling *17*
Range shifts 17
Accounting for Variability in Disturbances 22
Temporal multipliers without climate change 23
Temporal multipliers with climate change 34
Active Management Scenario 50

RESULTS & DISCUSSION **50**

MINIMUM MANAGEMENT 50
ACTIVE MANAGEMENT SCENARIO 57
Mojave Mid-Elevation Mixed Desert Scrub Habitat *57*
Mojave/Sonoran Scrub Habitat *59*
Lower Montane Woodland Habitat *60*
Intermountain Rivers & Streams Habitat *63*
Sagebrush Habitat *69*
WYOMING BIG SAGEBRUSH 69
BIG SAGEBRUSH-UPLAND 72
LOW/BLACK SAGEBRUSH 74
MONTANE SAGEBRUSH STEPPE-MOUNTAIN 76
Aspen Woodland Habitat *79*
ASPEN-MIXED CONIFER 79
ASPEN WOODLAND 81
Intermountain Conifer Forest & Woodlands Habitat *84*
Sierra Conifer Forest & Woodlands Habitat *87*

LESSONS LEARNED **90**

ACKNOWLEDGMENTS **91**

REFERENCES **92**

APPENDICES **95**

List of Figures & Tables

TABLE 1. DESCRIPTION OF CONTRIBUTING SPATIAL LAYERS. 13
TABLE 2. MODEL GROUPS FOR THE 13 REGIONS OF NEVADA. 15
TABLE 3. BIOPHYSICAL SETTINGS OF THE MODEL GROUPS. THE MONTANE RIPARIAN CARBONATE AND SUBALPINE RIPARIAN CARBONATE ARE COUPLED "RESISTANT" MODELS. 16
TABLE 4. HYPOTHESIZED DIRECTIONS OF RANGE SHIFTS. BPSS ARE APPROXIMATELY ARRANGED BY ELEVATION IN THE GREAT BASIN. DIFFERENT BPSS AMONG ROWS (READ VERTICALLY ONLY AND NEVER ACROSS COLUMNS) WITH THE SAME LETTER (NOT GROUPS OF LETTERS) INDICATE A RANGE SHIFT AND THE LETTER IN BOLD (ARBITRARILY ASSIGNED TO EACH LOSING BPS) IS THE ORIGINATING (LOSING) BPS; THEREFORE THE NORMAL LETTER INDICATES RECIPIENTS (GAINING) BPSS. SEE ARROW AS ONE EXAMPLE. 19
TABLE 5. HYPOTHETICAL PERCENTAGE OF RANGE SHIFTS ACCORDING TO BPSS PRODUCTIVITY AND INDICATOR SPECIES DISTRIBUTION OVER 100 YEARS. BIOPHYSICAL SETTINGS ARE APPROXIMATELY ARRANGED BY ELEVATION IN THE GREAT BASIN. 21
TABLE 6. SOURCE USGS GAGE DATA FOR DISCHARGE DEPENDENT TEMPORAL MULTIPLIERS. 25
TABLE 7. CLIMATIC DIVISIONS OF NEVADA AND NESTED REGIONS. 29
TABLE 8. OVERVIEW OF SIGNIFICANT INCREASES IN ECOLOGICAL DEPARTURE (ED), HIGH-RISK CLASSES (HR), OR ASPEN CLONE LOSS (AL) FOR ALL BPSS AND REGIONS DUE TO CLIMATE CHANGE EFFECTS. ALL COLORED ENTRIES INDICATE AN EFFECT OF CLIMATE CHANGE AMONG THE SCENARIOS "NO CLIMATE-CHANGE", "HALF CLIMATE CHANGE", AND "FULL CLIMATE CHANGE." LEGEND: ↑ED= SIGNIFICANT INCREASE IN ECOLOGICAL DEPARTURE COMPARED TO NATURAL RANGE OF VARIABILITY ; AL = SIGNIFICANT LOSS OF ASPEN; ↑HR = SIGNIFICANT INCREASE IN HIGH RISK CLASSES; ~ED= BORDERLINE SIGNIFICANT EFFECT ON ED. 53
TABLE 9. OVERVIEW OF SIGNIFICANT DECREASES IN ECOLOGICAL DEPARTURE (ED), HIGH-RISK CLASSES (HR), OR ASPEN CLONE LOSS (AL) FOR ALL BPSS AND REGIONS DUE TO CLIMATE CHANGE EFFECTS. ALL COLORED ENTRIES INDICATE AN EFFECT OF CLIMATE CHANGE AMONG THE SCENARIOS "NO CLIMATE-CHANGE", "HALF CLIMATE CHANGE", AND "FULL CLIMATE CHANGE." LEGEND: NO = NO EFFECT OF CLIMATE CHANGE; ↓ED = SIGNIFICANT ECOLOGICAL DEPARTURE DECREASE (I.E., MORE LIKE REFERENCE CONDITION); CREATED = SYSTEM NOT PRESENT IN NO CC SCENARIO, BUT PRESENT WITH CC DUE TO RANGE SHIFTS. 55

FIGURE 1. SCHEMATIC OF THE LANDSCAPE CONSERVATION FORECASTING™. LEGEND: NRV = NATURAL RANGE OF VARIABILITY IS THE REFERENCE CONDITION. ECOLOGICAL SYSTEMS ARE POTENTIAL VEGETATION TYPES. 11
FIGURE 2.CONSOLIDATED PHYTOGEOGRAPHIC REGIONS OF NEVADA. BASED ON 27 ORIGINAL REGIONS PROPOSED BY THE NEVADA NATURAL HERITAGE PROGRAM. 14
FIGURE 3. RIPARIAN TEMPORAL MULTIPLIERS FOR 7-YEAR, 20-YEAR, AND 100-YEAR FLOOD EVENTS WITHOUT CLIMATE CHANGE EFFECTS FOR THE HUMBOLDT RIVER AT THE CARLIN GAGE. FOR THE 20-YEAR AND 100-YEAR FLOOD EVENTS, RESPECTIVELY, ALL VALUES BELOW THEIR THRESHOLD WERE ZERO. FIVE REPLICATES (REPL) ARE SHOWN EACH PER 75-YEAR PERIOD. FLOOD EVENTS ARE BASED ON ANNUAL PEAK FLOW. THE GRAY LINE FOR TEMPORAL MULTIPLIER = 1 REPRESENTED THE "NO-CHANGE" OR NEUTRAL PARAMETER LINE. 25
FIGURE 4. FLASH-FLOODING TEMPORAL MULTIPLIERS WITHOUT CLIMATE CHANGE EFFECTS FOR KYLE CANYON. ONLY FLOOD EVENTS >19-YEAR OCCURRENCE WERE RETAINED; ALL OTHER VALUES WERE MADE ZERO. FIVE REPLICATES (REPL) ARE SHOWN EACH PER 75-YEAR PERIOD. THE GRAY LINE FOR TEMPORAL MULTIPLIER = 1 REPRESENTED THE "NO-CHANGE" OR NEUTRAL PARAMETER LINE. 26
FIGURE 5. EXOTIC INVASION AND EXOTIC-SPECIES INVASION TEMPORAL MULTIPLIERS WITHOUT CLIMATE CHANGE EFFECTS FOR THE HUMBOLDT REGION AT THE CARLIN GAGE OF THE HUMBOLDT RIVER AND THE MOJAVE DESERT REGION AT THE AMARGOSA RIVER TECOPA (CA) GAGE. FIVE REPLICATES (REPL) ARE SHOWN EACH PER 75-YEAR PERIOD. FLOOD EVENTS ARE BASED ON AVERAGE ANNUAL DISCHARGE. THE GRAY LINE FOR TEMPORAL MULTIPLIER = 1 REPRESENTED THE "NO-CHANGE" OR NEUTRAL PARAMETER LINE. 27
FIGURE 6. FIRE TEMPORAL MULTIPLIERS FOR REPLACEMENT FIRE, MIXED SEVERITY FIRE, AND SURFACE FIRE WITHOUT CLIMATE CHANGE EFFECTS FOR THE HUMBOLDT REGION. FIVE REPLICATES (REPL) ARE SHOWN EACH PER 75-YEAR PERIOD. DATA ARE TOTAL AREA BURNED PER REGION. THE GRAY LINE FOR TEMPORAL MULTIPLIER = 1 REPRESENTED THE "NO-CHANGE" OR NEUTRAL PARAMETER LINE. 28

FIGURE 7. PALMER DROUGHT SEVERITY INDEX (PDSI) TIME SERIES AND CALCULATED DROUGHT-RELATED TEMPORAL MULTIPLIERS WITHOUT CLIMATE CHANGE EFFECTS FOR THE FOUR CLIMATIC DIVISIONS OF NEVADA. FIVE REPLICATES (REPL) ARE SHOWN EACH PER 75-YEAR PERIOD. THE GRAY LINE FOR PDSI = 0 REPRESENTED AVERAGE DROUGHT CONDITIONS, WHEREAS THE GRAY LINE FOR THE DROUGHT TEMPORAL MULTIPLIER = 1 REPRESENTED THE "NO-CHANGE" OR NEUTRAL PARAMETER LINE. 30
FIGURE 8. TEMPORAL MULTIPLIERS OF ANNUAL GRASS INVASION, TREE INVASION, AND VERY WET YEARS WITHOUT CLIMATE CHANGE EFFECTS FOR THE FIRST CLIMATIC DIVISIONS OF NEVADA. FIVE REPLICATES (REPL) ARE SHOWN EACH PER 75-YEAR PERIOD. THE GRAY LINE FOR THE DROUGHT TEMPORAL MULTIPLIER = 1 REPRESENTED THE "NO-CHANGE" OR NEUTRAL PARAMETER LINE. 32
FIGURE 9. TREE RING WIDTH OF ANCIENT BRISTLECONE PINE FROM MT. WASHINGTON IN THE SOUTHERN SNAKE RANGE, NEVADA. DATA PROVIDED BY DR. MATT SALZER FROM THE UNIVERSITY OF ARIZONA'S LABORATORY OF TREE RING RESEARCH. 33
FIGURE 10. TEMPORAL MULTIPLIER FOR SUBALPINE TEMPERATURE OBTAINED FROM TREE RING WIDTHS (1628 TO 2002 AD) OF ANCIENT BRISTLECONE PINE FROM MT. WASHINGTON IN THE SOUTHERN SNAKE RANGE, NEVADA. DATA PROVIDED BY DR. MATT SALZER FROM THE UNIVERSITY OF ARIZONA'S LABORATORY OF TREE RING RESEARCH. FIVE REPLICATES (REPL) ARE SHOWN EACH PER 75-YEAR PERIOD. THE GRAY LINE FOR TEMPORAL MULTIPLIER = 1 REPRESENTED THE "NO-CHANGE" OR NEUTRAL PARAMETER LINE.....33
FIGURE 11. TEMPORAL MULTIPLIER FREEZE OBTAINED BASED ON MINIMUM TEMPERATURE FROM THE WEATHER STATION IN SEARCHLIGHT, NEVADA. FIVE REPLICATES (REPL) ARE SHOWN EACH PER 75-YEAR PERIOD. THE GRAY LINE FOR TEMPORAL MULTIPLIER = 1 REPRESENTED THE "NO-CHANGE" OR NEUTRAL PARAMETER LINE. 34
FIGURE 12. TEMPORAL MULTIPLIER FOR GLOBAL GREEN HOUSE GASES (BASED ON IPCC 2007) AND TEMPERATURE FOR THE NORTHERN SIERRA NEVADA (BASED ON DETTINGER ET AL. 2004) UNDER THE "BUSINESS-AS-USUAL" (A1FI FOR PCM; A2 FOR IPCC) CLIMATE CHANGE SCENARIO. TEMPERATURE RAW DATA OBTAINED FROM DR. M. DETTINGER, USGS, 2009 BASED ON THE PCM SIMULATIONS. THE GREEN HOUSE GASES AND TEMPERATURE TEMPORAL MULTIPLIERS WERE EACH CALCULATED BY DIVIDING EACH YEARLY VALUE BY THE VALUE OF THE FIRST YEAR OF THE TIME SERIES. 37
FIGURE 13. TEMPORAL MULTIPLIER OF PRECIPITATION (MM) FOR THE NORTHERN SIERRA NEVADA (BASED ON DETTINGER ET AL. 2004) UNDER THE "BUSINESS-AS-USUAL" (A1FI) CLIMATE CHANGE SCENARIO. PRECIPITATION RAW DATA OBTAINED FROM DR. M. DETTINGER, USGS, 2009 BASED ON THE PCM SIMULATIONS. 38
FIGURE 14. PEAK FLOW TEMPORAL MULTIPLIERS WITHOUT CLIMATE CHANGE (LEFT) VERSUS WITH CLIMATE CHANGE EFFECTS (RIGHT) USED TO ILLUSTRATE HEURISTIC TRANSFORMATION USING THE HUMBOLDT REGION. DIFFERENCE BETWEEN WITHOUT AND WITH CLIMATE CHANGE ARE DUE TO RANDOM NUMBER DRAWS. FIVE REPLICATES (REPL) ARE SHOWN EACH PER 75-YEAR PERIOD. FLOOD EVENTS ARE BASED ON AVERAGE ANNUAL DISCHARGE. THE GRAY LINE FOR TEMPORAL MULTIPLIER = 1 REPRESENTED THE "NO-CHANGE" OR NEUTRAL PARAMETER LINE. 39
FIGURE 15. FLASH-FLOODING TEMPORAL MULTIPLIERS WITHOUT (TOP) AND WITH CLIMATE CHANGE (BOTTOM) EFFECTS FOR THE MOJAVE REGION. ONLY FLOOD EVENTS >19-YEAR OCCURRENCE WERE RETAINED; ALL OTHER VALUES WERE MADE ZERO. FIVE REPLICATES (REPL) ARE SHOWN EACH PER 75-YEAR PERIOD. DIFFERENT FLOOD EVENTS ARE DUE TO RANDOM NUMBER DRAWS. THE GRAY LINE FOR TEMPORAL MULTIPLIER = 1 REPRESENTED THE "NO-CHANGE" OR NEUTRAL PARAMETER LINE. 40
FIGURE 16. EXOTIC INVASION AND EXOTIC-SPECIES INVASION TEMPORAL MULTIPLIERS WITHOUT (LEFT) AND WITHOUT CLIMATE CHANGE EFFECTS (RIGHT) FOR THE HUMBOLDT RIVER AT THE CARLIN GAGE AND THE MOJAVE DESERT REGION AT THE AMARGOSA RIVER TECOPA (CA) GAGE. FIVE REPLICATES (REPL) ARE SHOWN EACH PER 75-YEAR PERIOD. FLOOD EVENTS ARE BASED ON AVERAGE ANNUAL DISCHARGE. THE GRAY LINE FOR TEMPORAL MULTIPLIER = 1 REPRESENTED THE "NO-CHANGE" OR NEUTRAL PARAMETER LINE. 41
FIGURE 17. DROUGHT AND INSECT-DISEASE OUTBREAK TEMPORAL MULTIPLIERS WITH CLIMATE CHANGE EFFECTS FOR THE HUMBOLDT REGION. FIVE REPLICATES (REPL) ARE SHOWN EACH PER 75-YEAR PERIOD. VALUES ARE BASED ON A 2,300-YEARS TIME SERIES OF WESTERN JUNIPER TREE RINGS. THE GRAY LINE FOR TEMPORAL MULTIPLIER = 1 REPRESENTED THE "NO-CHANGE" OR NEUTRAL PARAMETER LINE. 43

FIGURE 18. TREE COMPETITION AND TREE ENCROACHMENT TEMPORAL MULTIPLIERS WITH CLIMATE CHANGE EFFECTS FOR THE HUMBOLDT REGION. FIVE REPLICATES (REPL) ARE SHOWN EACH PER 75-YEAR PERIOD. VALUES ARE BASED ON A 2,300-YEARS TIME SERIES OF WESTERN JUNIPER TREE RINGS. THE GRAY LINE FOR TEMPORAL MULTIPLIER = 1 REPRESENTED THE "NO-CHANGE" OR NEUTRAL PARAMETER LINE. 44
FIGURE 19. VERY-WET-YEAR TEMPORAL MULTIPLIERS WITH CLIMATE CHANGE EFFECTS FOR THE HUMBOLDT REGION. FIVE REPLICATES (REPL) ARE SHOWN EACH PER 75-YEAR PERIOD. VALUES ARE BASED ON A 2,300-YEARS TIME SERIES OF WESTERN JUNIPER TREE RINGS. THE GRAY LINE FOR TEMPORAL MULTIPLIER = 1 REPRESENTED THE "NO-CHANGE" OR NEUTRAL PARAMETER LINE. 45
FIGURE 20. REPLACEMENT, MIXED SEVERITY, AND SURFACE FIRE TEMPORAL MULTIPLIERS WITH CLIMATE CHANGE EFFECTS FOR THE HUMBOLDT REGION. FIVE REPLICATES (REPL) ARE SHOWN EACH PER 75-YEAR PERIOD. VALUES ARE BASED ON A 2,300-YEARS TIME SERIES OF WESTERN JUNIPER TREE RINGS. THE GRAY LINE FOR TEMPORAL MULTIPLIER = 1 REPRESENTED THE "NO-CHANGE" OR NEUTRAL PARAMETER LINE. 47
FIGURE 21. ANNUAL GRASS INVASION AND TREE INVASION TEMPORAL MULTIPLIERS WITH CLIMATE CHANGE EFFECTS FOR THE HUMBOLDT REGION. FIVE REPLICATES (REPL) ARE SHOWN EACH PER 75-YEAR PERIOD. VALUES ARE BASED ON A 2,300-YEARS TIME SERIES OF WESTERN JUNIPER TREE RINGS. THE GRAY LINE FOR TEMPORAL MULTIPLIER = 1 REPRESENTED THE "NO-CHANGE" OR NEUTRAL PARAMETER LINE. 48
FIGURE 22. FREEZE TEMPORAL MULTIPLIER WITH CLIMATE CHANGE EFFECTS FOR THE MOJAVE REGION. DATA FROM THE SEARCHLIGHT'S WEATHER STATION MINIMUM TEMPERATURE SERIES. FIVE REPLICATES (REPL) ARE SHOWN EACH PER 75-YEAR PERIOD. THE GRAY LINE FOR TEMPORAL MULTIPLIER = 1 REPRESENTED THE "NO-CHANGE" OR NEUTRAL PARAMETER LINE. 49
FIGURE 23. TEMPORAL MULTIPLIER FOR SUBALPINE TEMPERATURE WITH CLIMATE CHANGE OBTAINED FROM TREE RING WIDTHS (1902 TO 2002 AD) OF ANCIENT BRISTLECONE PINE FROM MT. WASHINGTON IN THE SOUTHERN SNAKE RANGE, NEVADA. DATA PROVIDED BY DR. MATT SALZER FROM THE UNIVERSITY OF ARIZONA'S LABORATORY OF TREE RING RESEARCH. FIVE REPLICATES (REPL) ARE SHOWN EACH PER 75-YEAR PERIOD. THE GRAY LINE FOR TEMPORAL MULTIPLIER = 1 REPRESENTED THE "NO-CHANGE" OR NEUTRAL PARAMETER LINE. 50

List of Appendices

APPENDIX I. GIS CODES AND QUERIES USED TO CREATE INITIAL CONDITIONS OF BIOPHYSICAL SETTINGS. 95
APPENDIX II: DESCRIPTIONS OF BIOPHYSICAL SETTINGS' VEGETATION CLASSES FOR THE WILDLIFE ACTION PLAN. 102
APPENDIX III: DESCRIPTION OF ECOLOGICAL MODEL DYNAMICS FOR THE WILDLIFE ACTION PLAN. 113

EXECUTIVE SUMMARY

The Nevada's Wildlife Action Plan was published and submitted to the US Fish and Wildlife Service in 2005. The plan's fundamental structure followed the coarse filter-fine filter approach with major habitat types forming the coarse filters and nested within them wildlife species of concern were fine filters. The 2005 plan did not comprehensively address climate change as a threat to wildlife species and their habitats.

The Nature Conservancy (TNC) and other cooperators were contracted by the Nevada Department of Wildlife (NDOW) to inform a comprehensive climate change revision of the original Wildlife Action Plan. TNC focused on measuring climate change effects on the future condition of ecological systems, which are building blocks to the major habitat types. TNC also proposed to evaluate the feasibility of restoring ecological systems that showed greater vulnerability to climate change.

The state of Nevada was divided into 14 phytogeographic regions. Potential vegetation types (ecological systems) and current vegetation classes within them were downloaded from LANDFIRE's website, modified with additional geodata, and clipped to each of the 14 regions. All computer simulations and analyses were conducted by region. Each region was assigned to one ecoregion that reflected consistent ecological systems and ecological processes: Columbia Plateau, Eastern Sierra Nevada, Great Basin, and Mojave Desert.

State-and-transition models were built for each of 33 ecological systems. Each ecoregion consisted of a group of models. No ecoregion contained all 33 different ecological systems. Models were simulated for two general purposes: (a) to obtain reference conditions, which reflect vegetation dynamics without any post-European settlement influences and (b) to determine vegetation dynamics with post-European settlement influences. Reference conditions for each ecological system, also called the Natural Range of Variability, were used to calculate the ecological departure (ED) between the percentages of current vegetation classes in a region (from the LANDFIRE geodata) and the expected percentage under reference conditions (Natural Range of Variability). ED is a measure of dissimilarity between current class percentages and expected percentages. Two other metrics of ecological conditions were calculated: high-risk vegetation classes (HR) and the percentage of area in aspen lost. HR classes must satisfy two of three conditions: (a) the class contains >5% non-native species cover, (b) the class is very expensive to restore to a succession class (usually >$300 per acre), and (c) the class must lead directly to a class defined in (a) or (b).

Climate change influences on an ecological system's ED, HR and, for aspen, aspen loss were determined by comparing simulation results from two scenarios:

- Minimum management without climate change influences (i.e., continuation of past weather patterns and no range shifts);
- Minimum management with climate change influences (i.e., modification of past weather patterns and range shifts).

Minimum management assumed that ecological systems received no special management (for examples, no herbicide application, no prescribed fire, no mechanical thinning of vegetation, and so on); however, they experienced traditional livestock grazing and fire suppression management. Climate change influences were incorporated through range shifts and ecological processes. Furthermore, the

minimum management with climate change scenario was developed in a version with half the intensity of range shifts because the full intensity of range shift was hypothesized—this second version of the scenario was used to gauge the sensitivity of results to the intensity of range shifts. Effects of climate changes on ecological processes (for examples, annual grass invasion rate, replacement fire return interval) within both scenarios were identical; only range shift rates differed.

Climate change influences on ecological processes were fundamentally modeled through time series of annual data that modified base parameter values in models. These time series were obtained from each region's data for peak and annual discharge from representative creeks and rivers, total area burned, drought, tree ring width chronology, and minimum temperature. The raw data were normalized and transformed with mathematical equations and logical rules. The resulting time series introduced both real world variability and trends into all simulations. In the absence of climate change, time series of past data were used unmodified for simulations of the next 50 years (and range shifts disabled). To imitate climate change, the time series' variability and trends were modified based of specific hypotheses of climate change, which were complex, and range shift were enabled.

The overall predictions of climate change are for a hotter climate by about 3°C with greater greenhouse gas concentration, but with the same total amount of average precipitation. This prediction is highly dependent on the influence of the Pacific Ocean. The greatest uncertainty for future climate forecasting (high divergence among Global Circulation Models) will be for a western shift of the western boundary for the monsoonal effect (i.e., summer precipitation). We assumed that the eastern Nevada regions would experience a greater amount of summer precipitation; therefore less drought.

More specific hypotheses of change were:

- Increased dispersal of non-native species caused by CO_2 fertilization of plant growth during wetter than average years;
- Decreased dispersal of non-native species during drier than average years regardless of CO_2 concentrations;
- Higher tree mortality during longer growing season droughts;
- Longer period of low flows caused by earlier snowmelt;
- Greater severe flood variability due to greater frequency of rain-on-snow events, which would favor cottonwood and willow recruitment on currently regulated rivers and creeks;
- Longer period of groundwater recharge during colder months with low evapotranspiration and greater percentage of rain *versus* snow (more effective recharge);
- More stable discharge (buffered from precipitation) for springs, seeps, wet meadows, creeks, and rivers on carbonate geology and, conversely, less stable discharge on non-carbonate geology;
- More frequent, larger fires in forested systems;
- Increased growth and recruitment of subalpine trees due to increased tree line temperature regardless of CO_2 fertilization.
- Longer fire return intervals in shrubland systems due to increased drought frequency preventing fine fuel build up;
- Increased dispersal of pinyon and juniper in shrublands caused by CO_2 fertilization during wetter than average years;
- Greater conifer and deciduous tree species recruitment and growth in wetlands/riparian due to drought and CO_2 fertilization;

- Impaired recruitment of willow and cottonwood due to descending peak flows occurring one month earlier and limited ability of these species to flower one month earlier in cold drainages; and
- Faster growth of fast-growing native tree species.

Comparison of scenario results after 50 years revealed consistent effects by ecological systems and differences among regions compared to the scenario without climate change. Climate change caused both detrimental (increased ED, HR, or loss of aspen) and, conversely, beneficial results, and created ecological systems previously not found in a region. Differences between the full and half rates of range shifts were minor.

Detrimental effects of climate change compared to no-climate change were more widespread among regions for about 12 ecological systems relative to where they occur: aspen-mixed conifer, aspen woodland, blackbrush mesic and thermic, curl-leaf mountain mahogany (half of regions), creosotebush-bursage, Jeffrey pine, mixed conifer, low-black sagebrush (only for HR, not ED), montane riparian (non-carbonate), montane sagebrush steppe-mountain site (>14 inch precipitation zone), and Wyoming big sagebrush semi-desert (<12 inch precipitation zone; for HR). These systems were targeted for management simulations. Many other ecological systems that were predicted to be in poor ecological condition in 50 years did not suffer from added detrimental climate change effects. The primary causes of either increased ED or HR are increased area invaded by annual grasses, exotic forbs and trees, and loss of aspen clones.

Climate change had no significant effects or decreased ED or HR for a large number of ecological systems: big sagebrush upland sites (12 to 14 inch precipitation zone), chaparral, curl-leaf mountain mahogany (half the regions), greasewood, limber-bristlecone pine, mixed salt desert, pinyon-juniper woodland, washes, Wyoming big sagebrush semi-desert (for ED).

TNC and NDOW staff held workshops in Carson City twice, Ely, and Las Vegas to seek expert knowledge on ecological system management for the Calcareous, Eastern Sierra Nevada, Elko, Lahontan, Mojave, and Walker regions. The goal was to develop coarse and representative management strategies to abate detrimental climate change effects and order of magnitude costs for regions belonging to different ecoregions. Ecological systems chosen for management were: aspen-mixed conifer, aspen woodland, blackbrush mesic and thermic, creosotebush-bursage, Jeffrey pine, mixed conifer, low-black sagebrush, montane riparian (non-carbonate), montane sagebrush steppe-mountain site, and Wyoming big sagebrush semi-desert. Proposed management strategies were very variable in type and cost among regions and agencies.

The following lessons learned emerged from our statewide analysis:

- Large differences in ED and HR were found in regions sharing the same models and climatic data. Differences in initial conditions, sometimes modest, fire activity, and flood regimes accounted for these differences.
- Comparable results were found between the full range shift and half range shifts scenarios; however, the rates and paths of range shifts were entirely hypothetical because no data exist on these topics. There is a dire need for basic conservation research on local range shifts caused by climate change that goes beyond the bioclimatic envelope modeling approach, which appears to greatly overestimate change.

- The regional cost of restoration was staggering for even a few BpS in a few regions. Our simulations easily spent $200 million using scenarios with higher Return-On-Investment. One BpS alone consumed >$75 million. Given the current success rates of restoration technology, the concept of wisely picking battles in a few promising large landscapes appears necessary.
- The staggering cost of restoration was primarily caused by the high failure rates of annual grass control and native plant material at middle and lower elevations. Greater sage-grouse, pygmy rabbit, mule deer, pronghorn, desert tortoise, and Ferruginous Hawk, to name a few wildlife species, prefer the middle and lower elevations. Technological and commercial breakthroughs in annual grass diseases and drought adapted native plant material are badly needed. Cnservationists may need to reconsider the role of mixed species plant material at lower elevations incorporating introduced species (crested wheatgrass and forage koshia) to achieve long-term success by displacement of annual grasses and reconditioning of soils to facilitate recolonization of native species. Conservation organizations often refuse or resist use of introduced species, therefore leaving managers with a choice between annual grasslands and failed seeding returning to annual grasslands at the lower elevations.
- Restoration of the dominant creosotebush-white bursage and blackbrush matrix in the Mojave Desert appears hopeless because the effect of herbicides on annual grasses only persists for two years and the success rate of native plant material establishment is at best 1%. Promising research on plant material currently being conducted might become commercially viable in the next 10-20 years (Abella et al. 2011); however, preservation of the classic Mojave Desert lowlands might depend on accelerating that schedule while managers find temporary and mostly wishful actions to conserve Mojave lowlands.
- The restoration of burned blackbrush communities does not appear possible. Blackbrush communities have been described as fire-sensitive relicts of past climatic periods that do not have the ability to regenerate in the current climate (but see Pendleton et al. 1996). Although blackbrush produces and disperses seeds, small mammals, ants, and plant competition, including for parent plants, reduces establishment success to about 0% (Pendleton et al. 1996). "Young" blackbrush are rare and mostly found on bulldozer-exposed rights-of-ways adjacent to unburned communities (Pendleton et al. 1996). Burned blackbrush communities have two fates: exotic species grassland and forbland or the early-succession snakeweed-yucca-big sagebrush phase that can last a minimum of 200 years (2,000 years at the lowest elevations). Because it is safe to assume that blackbrush will not return to its former potential, the conservation, academic, and management community should think about creation of a BpS without blackbrush on former blackbrush soils. Considering climate change, this new community might include a mixed community of creosotebush, fire-adapted or neutral Mojave shrubs, succulents, white bursage, snakeweed, and many species of the mixed salt desert usually found at lower elevation.

INTRODUCTION

The Nevada's Wildlife Action Plan was published and submitted to the US Fish and Wildlife Service in 2005. The plan's fundamental structure followed the coarse filter-fine filter approach with major habitat types forming the coarse filters and nested within them wildlife species of concern were fine filters. The 2005 plan did not comprehensively address climate change as a threat to wildlife species and their habitats.

The study of climate change effects on ecological systems at regional or sub-regional scales is not well developed. Typically, climate change effects on vegetation are presented as (a) range shifts, which are transformations of potential vegetation types at fixed locations (Rehfeldt et al. 2006; Bradley 2009a; Kelly and Goulden 2008), (b) quantitative studies of changes in CO_2, temperature, and precipitation on species mortality or growth (Smith et al. 2000; Bradley 2009b; Pennisi 2009; Salzer et al. 2009), and (c) quantitative studies of changes in CO_2, temperature, and precipitation on ecological processes (Tausch and Nowak 1999; Brown et al. 2004; Dettinger et al. 2004; Stronestrom and Harrill 2006; Maurer 2007; Westerling and Bryant 2008; Westerling, *in press*). None of these studies are specific to Nevada nor provide direct relationships of CO_2, temperature, and precipitation to ecological processes that could be modeled to test the effects of climate change on ecological systems.

The Nature Conservancy (TNC), as one of many cooperators, was contracted by the Nevada Department of Wildlife (NDOW) to inform a comprehensive climate change revision of the original Wildlife Action Plan. TNC focused on measuring climate change effects on the future condition of ecological systems, which are building blocks to the major habitat types. TNC also proposed to evaluate the feasibility of restoring ecological systems that showed greater vulnerability to climate change.

TNC proposed to use Landscape Conservation Forecasting™ (formerly Enhanced-Conservation Action Planning; Low et al. 2011) to evaluate future effects of climate change on ecological systems and restoration methods to abate negative effects of climate change. Landscape Conservation Forecasting™ consists of six steps:

1. Develop maps of potential vegetation types (synonymously ecological systems) and current vegetation classes within them by using interpreted satellite or low-flying aircraft imagery.
2. Refine computerized predictive state-and-transition ecological models for the ecological systems by updating TNC's Great Basin and Mojave Desert "library" of models.
3. Determine current condition of all ecological systems (a broad-scale measure of their "health"), using ecological departure (a.k.a., Fire Regime Condition or FRC; Rollins 2009) metric and other metrics of ecological condition. Ecological departure is measured by comparing the current condition of vegetation and the reference condition.
4. Use the computerized ecological models to forecast anticipated future condition of ecological systems under minimum management (includes traditional livestock grazing and standard fire suppression management) without and with climate change effects to quantify the added effect of climate change to ecological condition.
5. Use the computerized ecological models to forecast anticipated future condition of ecological systems under different sets of management actions designed to abate the added undesirable effects, including those of climate change.

6. Use Return-on-Investment analysis to assess which strategies for which ecological systems yield the most advantageous results.

A simple schematic diagram (Figure 1) that displays the relationship of these components to each other is presented below:

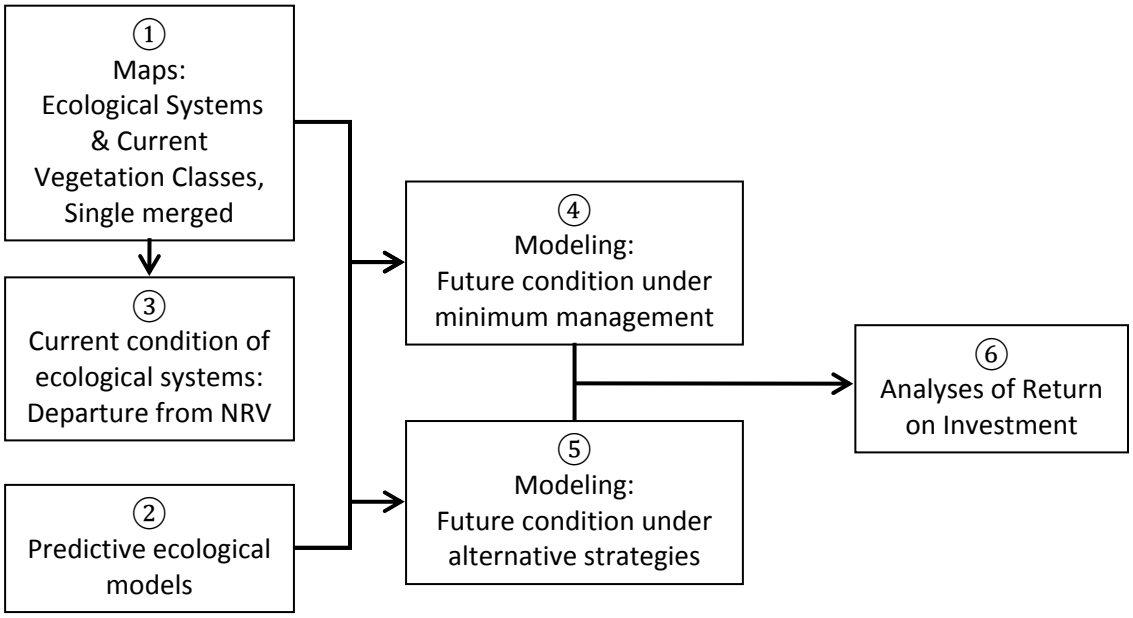

Figure 1. Schematic of the Landscape Conservation Forecasting™. Legend: NRV = Natural Range of Variability is the reference condition. Ecological systems are potential vegetation types.

The end goal of this report was to summarize the effects of climatic change on the ecological condition of habitat types that would shed light on effects to wildlife.

METHODS

Vegetation Mapping

This section explains the process of mapping ecological systems and vegetation classes for the 14 phytogeographic regions of Nevada.

Mapping Biophysical Settings and S-Classes

The foundation of the mapping component of this project is the stratification of the landscape into biophysical settings (BpS), which represent potential vegetation types. More specifically, the BpS is represented by the "type" of dominant vegetation that is expected in the physical environment under natural ecological conditions and disturbance regimes. Preferably, BpSs are mapped by interpreting ecological sites from Natural Resource Conservation Service (NRCS) soil surveys to major vegetation types. The NRCS defines ecological site as "a distinctive kind of land with specific physical characteristics that differs from other kinds on land in its ability to produce a distinctive kind and amount of

vegetation." (National Forestry Manual, ww.nrcs.usda.gov/technical/ECS/forest/ 2002_nfm_complete.pdf). Biophysical settings are composed of one or more ecological sites sharing the same dominant upper-layer species.

This project did not have available the comprehensive coverage of NRCS soil surveys and associated ecological sites needed to achieve the preferred method for mapping BpSs, as noted above. Therefore, spatial data of vegetation-type distributions from several different sources were integrated to generate one final vegetation map product. The five input sources were:

1. LANDFIRE (2010a, b, c) is interpreted Landsat satellite imagery. Each grid cell (pixel) includes: (1) the BpS type; and (2) the succession class or "S-Class" of the BpS type that currently occupies the grid cell. These LANDFIRE geodata were primary in the sense that all other products had to adopt their structure, because only these LANDFIRE spatial layers provided the critical S-Class (more intuitively, vegetation class) layer used to measure ecological departure. LANDFIRE's Existing Vegetation Cover (EVC) layer represents the average percent cover of existing vegetation for a 30-m grid cell. This layer was used to inform select non-reference classes from the combined BpS by S-Class layer.
2. Precipitation map from the PRISM (Parameter-elevation Regressions on Independent Slopes Model) group of Oregon State University that shows the distribution of precipitation across the United States based on modeled extrapolation of weather data among weather stations (Daly et al. 2008). PRISM is the USDA's official climatological data. These data were used to a) divide LANDFIRE's Blackbrush BpS between the thermic and mesic BpSs at the 9 inch precipitation zone and b)divide the big sagebrush complex into Wyoming Big Sagebrush semi-desert BpS (8-10 inch precipitation zone), Big Sagebrush-upland BpS (12-14 inch precipitation zone), and the Montane Sagebrush Steppe-mountain BpS (>14 inch precipitation zone).
3. The Nevada Natural Heritage Program (NNHP) developed the Annual Grass Index layer, which is an estimated relative measure of annual grass cover that can be correlated to the percent ground cover of non-native annual grasses interpreted from two captures of Landsat satellite imagery and field plots (Peterson 2005).
4. NNHP's known locations of invasive weeds (other than annual grasses) in Nevada served to inform select non-reference classes from the BpS by S-Class layer.
5. Southwestern Regional Gap Analysis Program landcover layer (Lowry et al. 2005) is interpreted satellite imagery of current natural and semi-natural vegetation on the landscape. This layer was used to inform select non-reference classes from the BpS by S-Class layer.

The integration of these sources was accomplished by a three-step process:

1. After a review of all LANDFIRE BpS, TNC merged minor with larger ones, or combined ecologically-compatible BpSs that are difficult to separate by remote sensing (e.g., Black-Low sagebrush and Inter-mountain Basins Semi-desert Shrub Steppe was nested in Mixed Salt Desert); then
2. TNC mapped the distributions of all of the major vegetation (BpS) types that appeared in the LANDFIRE source; and then
3. TNC wrote a lengthy set of queries or decision rules as to how those input data were to be depicted, pixel by pixel, on the output of the single merged map. These queries were designed primarily to assign a new class identity to each of the non-reference classes using the most current on-the-ground spatial information available. The queries also were used to rectify

implausible vegetation classes. The full set of queries for the State of Nevada, appears in Appendix 1.

For each BpS pixel in the raster data, it was next necessary to assign the correct vegetation class for any changed BpS (as a result of queries). Different BpSs that were merged may have the same code of vegetation classes; however, the codes could correspond to distinct succession or non-reference classes. This re-assignment of the vegetation class attributes was done according to field-informed knowledge of Nevada ecological systems by one of the project's principals (L. Provencher). A short description of each vegetation class by BpS used in the analyses is presented Appendix II. The revised map layers were clipped to the minor phytogeographic regions layer.

The 27 phytogeographic regions layer acquired from NNHP represented floristically and physiographically similar areas of Nevada. This layer was consolidated from 27 to 14 phytogeographic regions to facilitate modeling (Figure 2). The phytogeographic regions were consolidated into the Mojave, Clover-Delamar, Walker Corridor, Eastern Sierra Nevada, Sierra Nevada, Lahontan Basin, Humboldt Ranges, Toiyabe, Eureka, Calcareous Ranges, Elko, Tonopah, Owyhee Desert, and Black Rock Plateau. The Mojave was consolidated from 7 individual phytogeographic regions to one. The Calcareous region was consolidated from three individual phytogeographic regions, and Elko and Tonopah were both consolidated from two phytogeographic regions. Two phytogeographic regions that were not within the boundaries of Nevada were removed.

These actions were completed within ArcInfo 9.3.1. Original configuration of the data can be found in Table 1. LANDFIRE layers were downloaded using LANDFIRE's Data Access tool, which operates as an extension in ArcMap. All layers were projected to North American Datum 83 and, if needed, they were converted to 30 meter resolution, and clipped to the boundary of Nevada. Due to the large amount of data for processing, several Environment settings were changed from default values: 1) The snap raster was set to the BpS layer to force pixels to be processed in their correct locations; 2) Cell Size was set to 30 m to force ArcMap to process results to the desired pixel size; and 3) The maximum number of unique value generated option had to be increased to accommodate the resulting data combination from the Combine tool.

Table 1. Description of contributing spatial layers.

Spatial Data	Spatial Resolution	Date	Creator
Biophysical Settings	30 m	2010	LANDFIRE
Succession Class	30 m	2010	LANDFIRE
Precipitation	654 m	2006	PRISM
Landcover	30 m	2004	SWReGAP
Annual Grass Index	28.5 m	2004	NNHP
Weeds	Shapefile	2005	NNHP
Existing Vegetation Cover	30 m	2010	LANDFIRE

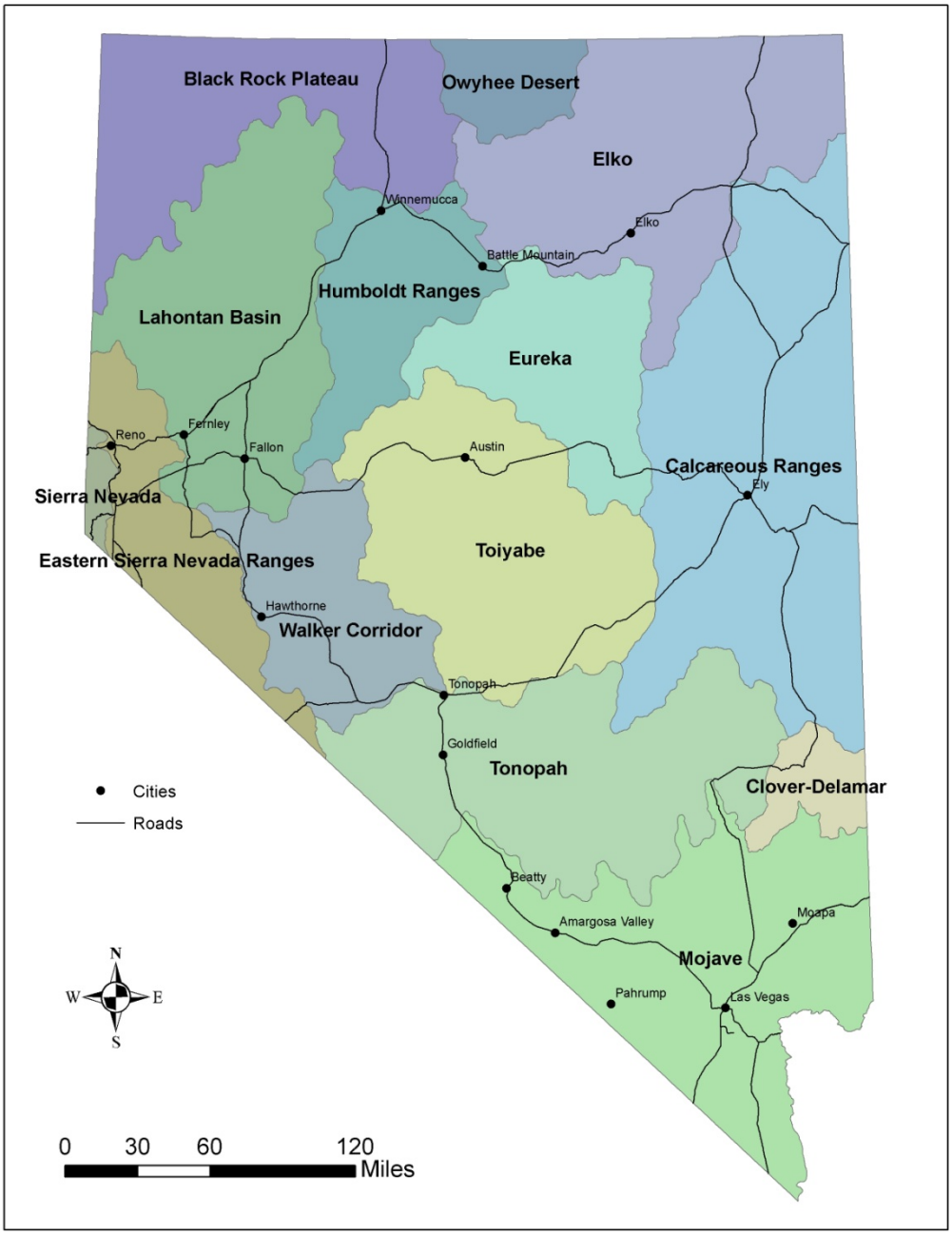

Figure 2.Consolidated phytogeographic regions of Nevada. Based on 27 original regions proposed by the Nevada Natural heritage Program.

Upon further review of vegetation classes per phytogeographic regions by the project's principals familiar with the expected vegetation classes, further refinement of the spatial data was conducted. Refinements consisted of nesting unlikely BpSs in a region into recipient BPSs and cross-walking S-Classes. These operations resulted in a large number of adjustments to the initial conditions used for computer simulations and shared with partners.

Assessing Future Condition

This section explains the process of simulating climate change effects using range shifts and temporal multipliers in state-and-transition models for the 14 different regions of Nevada.

Modeling by Regions of Nevada

We retained 14 regions for analysis; however current modeling was conducted for only for 13 of them. The Sierra Nevada region, the smallest limited to the Carson Range, contained the greatest number of BpSs with many unique to this region. A decision was made to not develop explicit models for this very small region containing Lake Tahoe and many residential developments, especially because TNC had just completed a similar assessment for the whole Northern Sierra Nevada, including the Carson Range on the eastside of the Sierra crest (Low et al. 2011). Moreover, models and results for the Eastern Sierra Nevada region, also a small region surrounding the Sierra Nevada region, would apply to the latter.

Although 13 regions were modeled, only four groups of models were required to characterize them: Great Basin, Columbia Plateau, Eastern Sierra Nevada, and Mojave (Table 2). For example, the Eureka and Toiyabe regions share the same Great Basin models. The Great Basin group is the most general of the four. The Columbia Plateau resembles the Great Basin group but has shorter fire return intervals for sagebrush BpSs, contains unique BpSs such as Low-Elevation Grassland, and Big Sagebrush Steppe is especially important in this region because Idaho fescue (*Festuca idahoensis*) is widespread. The Eastern Sierra Nevada group is nearly identical to the Great Basin, except that ponderosa pine (*Pinus ponderosa*) is replaced by Jeffrey pine (*Pinus jeffreyi*). The Mojave Desert group has unique BpSs (for example, Paloverde-Mixed Cacti), the traditional Big Sagebrush upland BpS is a hybrid of upland and desert wash vegetation, and aspen-mixed conifer is strictly an avalanche dependent community unlike aspen (*Populus tremuloides*) communities in the rest of Nevada. Whether a BpS is present in a region depended on the initial conditions of the BpS's vegetation classes. For example, the Eureka and Toiyabe regions may share the same Great Basin models, but one region may lack the subalpine riparian BpS. Regions retained most of their identity through temporal multipliers (defined later). Temporal multipliers are time series of fire and climate variation obtained from local data and imported into the models.

Table 2. Model groups for the 13 regions of Nevada.

Region/Group	Great Basin	Columbia Plateau	Eastern Sierra	Mojave
Black Rock		X		
Clover-Delamar	X			
Calcareous	X			
Eastern Sierra NV			X	
Elko		X		
Eureka	X			
Humboldt	X			
Lahontan	X			
Mojave				X
Owyhee		X		
Toiyabe	X			
Tonopah	X			
Walker	X			

In addition to the four groups, models for pairs or single BpSs with strong soil affinities belonging to all regions were expected to buffer climate change induced range shifts. Models of this type were named "resistant" because other plant communities can rarely occupy the soils they live on and these types are notoriously resistant to variation in drought levels. For example, the Greasewood BpS is found on sodic soils at 2,000 feet of elevation in the Mojave Desert and 6,000 feet of elevation in the central Great Basin ecoregion. The full list of BpSs is shown in Table 3.

Table 3. Biophysical settings of the model groups. The Montane riparian carbonate and subalpine riparian carbonate are coupled "resistant" models.

BpS	Great Basin	Columbia Plateau	Eastern Sierra	Mojave	Resistant
Alpine	X	X	X	X	
Aspen-Mixed Conifer	X	X	X	X	
Aspen Woodland	X	X	X		
Big Sagebrush Steppe	X	X	X		
Big Sagebrush upland	X	X	X	X	
Blackbrush-mesic	X		X	X	
Blackbrush-thermic				X	
Chaparral	X		X	X	
Creosotebush-Bursage	X			X	
Curlleaf Mountain Mahogany	X	X	X	X	
Greasewood					X
High Elevation Meadow	X	X	X	X	
Jeffrey Pine			X		
Juniper Savanna					X
Limber-Bristlecone Pine	X	X	X	X	
Low-Black Sagebrush	X	X	X	X	
Low Sagebrush Steppe	X	X	X		
Low-Elevation Grassland		X			
Mixed Conifer	X	X	X	X	
Mixed Salt Desert	X	X	X	X	
Montane Riparian	X	X	X	X	
Montane Riparian Carbonate					X
Montane Sagebrush Steppe mountain	X	X	X	X	
Mountain Shrub	X	X	X	X	
Paloverde-Mixed Cacti				X	
Pinyon-Juniper	X	X	X	X	
Ponderosa Pine	X	X		X	
Semi-Desert Grassland					X
Spruce-Fir	X	X			
Subalpine Riparian	X	X	X		
Subalpine Riparian Carbonate					X
Warm Desert Riparian					X
Washes	X	X	X	X	
Wyoming Big Sagebrush	X	X	X		

Predictive Ecological Models

In order to forecast future condition with and without projected climate change effects (as well as to test alternative management strategies), one state-and-transition model was developed for each BpS using Vegetation Dynamics Development tool (VDDT by ESSA Technologies Ltd.; Barrett 2001; Beukema et al. 2003). Models were uploaded in the new PATH software platform recently developed by ESSA Technologies, LTD. PATH allows users to run multiple state-and-transition models across a landscape and features advanced input/output and reporting options compatible with Excel viewing.

A state-and-transition model is a discrete, box-and-arrow representation of the continuous variation in vegetation composition and structure of an ecological system (Bestelmeyer et al. 2004). Different boxes either belong to different phases within a state or different states. States are formally defined in rangeland literature (Bestelmeyer et al. 2004) as: persistent vegetation and soil changes per potential ecological sites that can be represented in a diagram with two or more boxes (phases of the same state). Different states are separated by "thresholds." A threshold implies that substantial management action would be required to restore ecosystem structure and function. Relatively reversible changes caused by natural disturbances (e.g., fire, flooding, drought, insect outbreaks, and others), unlike threshold-causing disturbances, operate between phases within a state.

All BpS models originally had at their core the LANDFIRE reference condition represented by some variation around the A-B-C-D-E succession classes, which are phases within the reference state (for example, Forbis et al. 2007). The A-E class models represent succession from usually herbaceous vegetation (class A) to increasing woody species dominance where the dominant woody vegetation might be shrubs (class C) or trees (class E). We used TNC's modifications of the original LANDFIRE models that have since been used in many projects (Provencher et al. 2009; Abele et al. 2010; Low et al. 2011; Provencher et al. 2010; Tuhy et al. 2010a,b). These newer models have slightly different A-E classes than the original LANDFIRE models and, for most models, additional "uncharacteristic" (U) classes. Uncharacteristic classes are outside of reference condition classes and are caused by anthropogenic disturbances (e.g. non-native annual grass invasion).

The Natural Range of Variability (NRV) representing the reference condition of each BpS was obtained by simulating each model for 500 years and disabling all anthropogenic disturbances (for examples, livestock grazing, annual-grass invasion, fire-suppression, exotic-forb invasion) and zeroing out all uncharacteristic classes. The percentages of each class for each BpS by region after 500 years is the NRV. The NRV is necessary to calculate the ecological departure (ED) metric, and ultimately Return-On-Investment (ROI).

A comprehensive nuts-and-bolts description of each BpS's model is presented in Appendix III.

Overview of Climate Change Modeling

We captured climate change effects through range shifts and modifications to ecological disturbance rates.

<u>Range shifts</u>
Range shifts occur when the dominant and indicator species of a BpS cannot reproduce at a site and indicator species of another BpS replace them permanently at the same site. Useful results or

hypotheses about local range shifts are rare in the literature, especially for the Inter-Mountain West. The most comprehensive analysis is bioclimatic envelope modeling spanning the western United States (Rehfeldt et al. 2006). Results show range shifts of functional groups and key woody species (many trees) by 30-year increments: 2030, 2060, and 2090. For example, Engelmann spruce (*Picea engelmannii*) disappears from Nevada, whereas ponderosa pine, Douglas-fir (*Pseudotsuga menziesii*), Gambel oak (*Quercus gambelii*) and saguaro cactus (*Carnegiea gigantea*) dramatically expand their ranges in Nevada, most likely due to the penetration of monsoonal storms towards central Nevada. Similarly, Bradley (2009a) predicts from bioclimatic envelope modeling coupled with 20 climate change model predictions that Wyoming and basin big sagebrush's (respectively, *Artemisia tridentata wyomensis* and *Artemisia tridentata tridentata)* ranges will dramatically shrink during the same period. The bioclimatic approach does not incorporate local or long distance dispersal processes of species dispersal and the ability of long-lived adult individuals to persist for hundreds and thousands of years even in unfavorable climate (famously, bristlecone pine [*Pinus longaeva*], curl-leaf mountain mahogany [*Cercocarpus ledifolius*], limber pine [*Pinus flexilis*], and Utah juniper [*Juniperus osteosperma*]). For example, it is hard to imagine that giant saguaro cactus would migrate from southern Arizona to the Las Vegas Nevada in 100 years, especially given that reproduction starts between ages 50 and 75 years.

Dispersal and seedling establishment of colonizing species may be underestimated factors in range shift studies. Kelly and Goulden (2008) attempted to detect range shifts along an altitudinal gradient in the southern California Santa Rosa Mountains at the edge of the Mojave Desert and the southern tip of the Sierra Nevada. The Santa Rosa Mountains had warmed by 0.27^{o}C per decade since 1979. They found that species such as Jeffrey pine, white fir (*Abies concolor*), various oaks, creosotebush (Larrea tridentata), white bursage (*Ambrosia dumosa*) did not shift upwards, but all "leaned" upwards in their distribution after 30 years. Leaning means that the abundance of the species increases at the higher elevations of its distribution, but decreases at the lower elevations. In other words, after 30 years of strong warming, no changes in the BpSs' footprints were detected, although changes in relative abundance were found.

Recent paleoecology work in central Nevada also stresses the natural inertia of species to climate variation (*personal communication*: Dr. Robin Tausch, Rocky Mountains Research station, Reno, NV). Tausch's group studied packrat middens and ancient temperature variation in central Nevada. They showed that central Nevada experienced a period of warming ~2,500 years ago similar to the one predicted by global circulation models (i.e., 3°C over 100 years) with major shifts in species ranges occurring, however, this warming lasted 1,000 years. A period of 1,000 years would allow species to disperse. For example, Tausch and collaborators found mixed salt desert species (for example shadscale, *Atriplex confertifolia*) at 7,400 feet (2,255 m) of elevation mixed with Wyoming big sagebrush and persisting curl-leaf mountain mahogany. Today, mountain big sagebrush on loamy soils and pinyon-juniper or curl-leaf mountain mahogany on unproductive soils dominate at 7,400 feet of elevation. Tausch hypothesized that current climate change will be sufficiently fast that species will not track it except by attrition, especially at lower elevations. The more drought resistant species with good dispersal capabilities will survive and migrate. Others will disappear. At higher elevations where soil moisture is greater, prolific tree species will have the ability to move towards greater soil moisture more rapidly than lower elevation species.

Table 4. Hypothesized directions of range shifts. BpSs are approximately arranged by elevation in the Great Basin. Different BpSs among rows (read vertically only and never across columns) with the same letter (not groups of letters) indicate a range shift and the letter in bold (arbitrarily assigned to each losing BpS) is the originating (losing) BpS; therefore the normal letter indicates recipients (gaining) BpSs. See arrow as one example.

BpS	Great Basin	Columbia Plateau	Eastern Sierra	Mojave	Resistant
Alpine	**A**	**A**	**A**	**A**	
Limber-Bristlecone Pine	A,**B**	A,**B**	A,**B**	A,**B**	
Spruce-Fir	A,**C**	A,**C**			
High Elevation Meadow	**D**	**D**	**D**	**C**	
Subalpine Riparian	**E**	**E**	**E**		
Subalpine Riparian Carbonate	**F**	**F**	**F**		**A**
Aspen Woodland	**G**	**G**	**G**		
Montane Sagebrush Steppe mountain	H,**I**	H,**I**	H,**I**	**D**	
Curl-leaf Mountain Mahogany	B,**J**,M	B,**J**,M	B,**J**,M	B,D,E,H	
Low Sagebrush Steppe	K	K	K		
Aspen-Mixed Conifer	**H**	**H**	**H**	**F**	
Mixed Conifer	B,C,D,**L**	B,C,D,**L**	B,D,**L**	B,C,D,**G**	
Ponderosa Pine	L,**M**	L,**M**		G,**H**	
Jeffrey Pine			**L**M		
Montane Riparian	E,**N**	E	E	**I**	
Montane Riparian Carbonate	F	F	F		A
Chaparral			L,M	D,E,G,H,J	
Mountain Shrub	**O**	**O**	**O**	**J**	
Pinyon-Juniper	L,M,**P**	L,M,**P**	L,M,**P**	E,F,G,H,**K**	
Big Sagebrush Steppe	G,I,O,**Q**	G,I,O,**Q**	G,I,O,**Q**		
Big Sagebrush upland	G,H,I,O,**R**	G,H,I,O,**R**	G,H,I,O,**R**	I,**L**	
Low-Black Sagebrush	I,J,K,P,R,**S**	I,J,K,P,R,**S**	IJ,K,P,R,S	K	
Juniper Savanna					
Blackbrush-mesic	**T**		S	K,**M**	
Blackbrush-thermic	T			M,L,**N**	
Washes	N				
Wyoming Big Sagebrush	J,P,Q,R,**U**	J,P,Q,R,**U**	J,P,Q,R,**U**		
Low-Elevation Grassland					
Semi-Desert Grassland					
Creosotebush-Bursage	**V**	**V**	**V**	N,**O**	
Mixed Salt Desert	S,U,V	S,U,V	S,U,V	O	
Greasewood					
Warm Desert Riparian					
Paloverde-Mixed Cacti				O	

We were encouraged by Drs. Tausch and Weisberg (Dr. Peter Weisberg, University of Nevada, Reno) to build hypotheses about range shifts in Nevada because quantitative results do not exist. We created two matrices of hypotheses about shifts from one to one or more BpSs (i.e., the direction of shift), and about the percentage of shifts over 100 years (the simulations are based on rates of shift: probability per year). The directions of various hypothetical shifts are presented in Table 4.

Most of the range shifts are simply colonization of the next higher elevation zone. Intuitive examples in Table 4 were (descriptions of shifts are from the perspective of model disturbances: arrows point out from the losing BpS [usually cooler-wetter] towards the gaining BpS [usually warmer-drier]):

1. Transition out from Montane Sagebrush Steppe mountain (i.e., subalpine) to Big Sagebrush upland (montane);
2. Transition out from Big Sagebrush upland (montane) to Wyoming Big Sagebrush (semi-desert) or Low-Black Sagebrush (semi-desert to montane) on harsher soils;
3. Transition out from Subalpine Riparian to Montane Riparian on both non-carbonate and carbonate rocks;
4. Transition out from Montane Riparian to Washes on non-carbonate rocks, where rivers with losing and gaining reaches are sensitive to precipitation. Carbonate aquifers buffer discharge because creeks are dominated by gaining reaches with older water recharge; therefore there is no predicted shift to Washes.

Other shifts are less intuitive because recipient BpSs have large ecological amplitude. For example, Curl-leaf Mountain Mahogany is the most likely recipient BpS of areas occupied by the Limber-Bristlecone Pine BpS (droughty sites) in the subalpine zone as seen today in the Snake Range (NV) and White Mountains (CA). Ponderosa Pine, however, at montane elevations in eastern Nevada and the Mojave Desert (or Jeffrey Pine in the Sierra Nevada) is predicted to be replaced by Curl-leaf Mountain Mahogany, Chaparral, and Pinyon-Juniper BpSs. Dominant species of these “warmer” BpSs are today sub-dominant species in Ponderosa Pine; therefore the range shift to a drier BpS is justified. A less obvious range shift is out of Aspen-Mixed Conifer to Montane Sagebrush Steppe mountain and Big Sagebrush upland BpSs. Aspen-Mixed Conifer contains a subalpine form composed of Engelmann spruce and limber pine at subalpine elevations that would shift to Montane Sagebrush Steppe mountain, whereas the montane form of aspen composed of white fir and Douglas-fir will shift to Big Sagebrush upland with warming.

The rates of conversion from losing to gaining BpSs were hypothesized based on their productivity, whether or not the losing and gaining indicator species are the same (for example, Low Sagebrush Steppe to Low-Black Sagebrush BpSs), different species but already overlapping at the same location (for example, Wyoming Big sagebrush to Mixed Salt Desert BpSs), or species are not in the same range (i.e., requiring long distance dispersal) (Table 5). The highest rate of conversion was 60% when the losing and gaining indicator species are the same in high and intermediate productivity BpSs at subalpine to montane elevations. One exception is the riparian BpS on carbonate aquifers, which is thermally buffered by cold water feeding creeks dominated by gaining reaches. For BpSs found at alpine elevation or the lowest elevations, the rate of conversion drops to 50% for the same indicator species at intermediate productivity (no cases at high productivity); however, the rate is halved to 25% for mesic to thermic Blackbrush (*Coleogyne ramosissima*) in the Mojave Desert because it requires that increased temperature kills drought resistant Utah junipers while preserving blackbrush. All rates for shifts among

the same indicator species drop by 10% (i.e., 60% to 50% or 50% to 40%) for low productivity BpSs (for example, Low Sagebrush Steppe).

Table 5. Hypothetical percentage of range shifts according to BpSs productivity and indicator species distribution over 100 years. Biophysical settings are approximately arranged by elevation in the Great Basin.

	Productivity								
Source BpS Type	High			Medium			Low		
	Recipient Species in Landscape? Same Indicator Species?			Recipient Species in Landscape? Same Indicator Species?			Recipient Species in Landscape? Same Indicator Species?		
	Yes/ Same	Yes/ Different	No/ Different	Yes/ Same	Yes/ Different	No/ Different	Yes/ Same	Yes/ Different	No/ Different
Alpine					10% [i]				
Limber-Bristlecone Pine								5%[r]	
Spruce					10% [j]				
Subalpine Shrub				60%[f]	15%[k]		50%[o]		
High Elevation Meadow		20%[d]							
Aspen		20% [e]							
Montane Forest					15%[l]			10%[s]	
Riparian Non-Carbonate	60%[a]				15%[m]				
Riparian Carbonate	10% [b]								
Montane Shrub	60%[c]			60%[g]	10% [n]				
Subxeric Woodland								5%[t]	
Semi-desert Shrub							40%[p]	5%[u]	1%[v]
Desert Shrub				25% [h]			40%[q]		1%[w]

[a]: Subalpine to Montane Riparian and to Washes
[b]: Subalpine Riparian carbonate to Montane Riparian carbonate
[c]: Mountain Shrub to Big Sagebrush upland and Big Sagebrush Steppe
[d]: High-Elevation Meadow to Mixed Conifer
[e]: Aspen Woodland to Big Sagebrush upland and Big Sagebrush Steppe; Aspen Mixed Conifer to Big Sagebrush upland and Montane Sagebrush Steppe mountain
[f]: Montane Sagebrush Steppe mountain to Big Sagebrush upland and Low-Black Sagebrush
[g]: Big Sagebrush Steppe to Wyoming Big Sagebrush
[h]: Blackbrush mesic to Blackbrush thermic
[i]: Alpine to Limber-Bristlecone Pine
[j]: Spruce to Mixed Conifer
[k]: Montane Sagebrush Steppe mountain to Chaparral in Mojave Desert
[l]: Mixed Conifer to Ponderosa Pine in Great Basin and Columbia Plateau; Mixed Conifer to Ponderosa Pine, Chaparral and Pinyon-Juniper in Mojave desert; Ponderosa pine to Curl-leaf Mountain Mahogany, Chaparral, and Pinyon-Juniper in Mojave Desert

[m]: Montane Riparian to Big Sagebrush upland in Mojave Desert; Big Sagebrush upland to Washes in Mojave Desert
[n]: Big Sagebrush upland to Wyoming Big Sagebrush in Great Basin; Mountain Shrub to Chaparral in Mojave Desert
[o]: Low Sagebrush Steppe to Low-Black Sagebrush
[p]: Wyoming Big Sagebrush to Mixed Salt Desert except Mojave Desert
[q]: Blackbrush thermic to Creosotebush-White Bursage
[r]: Limber-Bristlecone Pine to Curl-leaf Mountain Mahogany and Mixed Conifer
[s]: Mixed Conifer to Pinyon-Juniper and Ponderosa Pine; Jeffrey Pine to Chaparral and Pinyon-Juniper in the Eastern Sierra
[t]: Pinyon-Juniper or Curl-leaf Mountain Mahogany to Wyoming Big Sagebrush and Low-Black Sagebrush in the Great Basin; Curl-leaf Mountain Mahogany to Chaparral and Pinyon-Juniper in the Mojave Desert
[u]: Low-Black Sagebrush to Mixed Salt Desert in Great Basin; Low-Black Sagebrush to Blackbrush mesic in Mojave Desert
[v]: Mixed Salt Desert to Creosotebush-White Bursage in Great Basin; Low-Black Sagebrush to Blackbrush mesic in Mojave Desert
[w]: Creosotebush-White Bursage to Mixed Salt Desert and Paloverde-Mixed Cacti in Mojave Desert

Range shifts are substantially smaller when the indicator species of the gaining BpSs differ from those of the losing BpS (second column in each productivity group). The rates drop by 5% for the BpSs at the harsher alpine and low elevations (for examples, Big Sagebrush upland to Wyoming Big Sagebrush, Spruce to Mixed Conifer, and Alpine to Limber-Bristlecone Pine). The smallest range shifts (1%) are hypothesized when the recipient BpSs are far away (not in the landscape) from the losing BpS or the dispersal ability of the gaining indicator species is highly improbable (for example, blackbrush), and indicator species are different. Only three cases fall in this category: the shift from Low-Black Sagebrush to Blackbrush BpSs on shallow calcareous soils of the Mojave Desert, from Mixed Salt Desert to Creosotebush-White Bursage BpSs in the Great Basin, and from Creosotebush-White Bursage to Paloverde-Mixed Cacti BpSs in the Mojave Desert.

The percentages of range shifts in Table 5 translate to rates (probability per year) in simulations. Special disturbances named CC-Conversions were created to execute the range shifts. We assumed that range shifts occur immediately after stand replacing events when the original indicator species (for example, Jeffrey pine) cannot reproduce at a site where it previously could. This shift only occurs during the first year of any early succession class ("A" class and such classes as Annual-Grassland [AG] and Early-Shrub [ES]). Also, losing pixels are gained by other BpSs on the second year, thus guaranteeing that incoming pixels are not immediately transferred to the next BpSs in a second range shift. Appendix IV contains all the range shifts disturbances and their rates, including all other disturbances. Because range shifts were hypothesized and considered a worst case scenario, we also arbitrarily cut the rates of range shifts by approximately half (actually 45% to accomplish a realized ~50% range shift in simulations) to test sensitivity of results, and recalculated disturbance rates. A final characteristic of CC-Conversion is its build-up over time. We assumed that climate change-induced range shifts are null at the beginning of the simulation, but increase linearly with time until they double by year 75 (the maximum duration of a simulation); therefore, the temporal multiplier is equal to one at about 38 years into the simulation. Doubling the temporal multiplier by year 75 guaranteed that the average of the time series is one (i.e., no change to the baseline parameter).

Accounting for Variability in Disturbances

The basic VDDT models incorporate stochastic disturbance rates that vary around a mean value for a particular disturbance associated with each ecological system. The default variability is relatively minor in magnitude and constant over the duration of a simulation. For example, fire is a major disturbance factor for most BpSs, including replacement fire, mixed severity fire, and surface fire. These fire regimes have different rates or probabilities of occurrence in a given year (i.e., inverse of the mean fire return interval) that are incorporated into the models for each BpS where they are relevant. However, in real-

world conditions the disturbance rates are likely to vary appreciably over time. To simulate strong yearly variability for fire activity, drought-induced mortality, non-native species invasion rates, tree encroachment rate, loss of herbaceous understory, flooding, and so on, we incorporated temporal multipliers in the model run replicates.

A temporal multiplier is a number in a yearly time series that multiplies a base disturbance rate in the VDDT models: e.g., for a given year, a temporal multiplier of one implies no change in a disturbance rate, whereas a multiplier of zero is a complete suppression of the disturbance rate, and a multiplier of three triples the disturbance rate. A temporal multiplier can be obtained from time series data or theoretically derived. Each temporal multiplier has a without and with climate change version.

We generated temporal multipliers for two different purposes: 1) to represent a period of approximated current land management (i.e., generally fire suppression and livestock grazing) continuing 50 years into the future without climate change effects and 2) to represent the same management assuming climate change effects 50 years into the future.

Temporal multipliers without climate change

We created a group of temporal multipliers for each of 13 regions. Temporal multipliers were for 7-year, 20-year, and 100-year flooding, exotic forb-invasion, exotic-tree invasion (in the Mojave Desert and southern Great Basin regions), flash-flooding (in the Mojave Desert and southern Great Basin regions), replacement fire, mixed severity fire, surface fire, drought, insect/disease outbreaks, annual-grass invasion, tree (natives) invasion, tree competition, very wet years, temperature (subalpine trees), and freezing in the Mojave Desert.

Temporal multipliers for Montane and Subalpine Riparian, and Washes BpSs were strongly dependent on discharge variations (Rood et al. 2003; McBride and Strahan 1984). Variability of the 7-year, 20-year, and 100-year flood events used in the models were all based on filtering the full time series for increasingly higher values of annual peak discharge that corresponded to these flood events. We obtained one peak discharge time series per region from one USGS gage that contained a long and generally continuous record, preferably from a major creek or river (Table 6). The three levels of flooding corresponded to 7-year events that killed or removed only herbaceous vegetation; 20-year events that killed or removed shrubs and young trees; and 100-year events that top-killed larger trees (i.e., these are three distinct disturbances in the riparian VDDT models).

Time series of peak discharge from different regions were of different lengths. We created five replicates of 75 years each by resampling the original time series using random numbers and MS Excel®'s vlookup function. Each resampled peak discharge values was divided by the temporal average discharge of that gage, thus generating a dimensionless time series of peak flow with an average of one (i.e., the temporal multiplier). Based on known flood events for the Truckee River, the 7-year, 20-year and 100-year flood events, respectively, corresponded to ~0.8, ~1 and ~3.69 of the flood temporal multiplier series. All values less, respectively, than the thresholds of 1 and 3.69 for the 20-year and 100-year flood events were set to zero because they did not have enough force to destroy class-dependent vegetation (i.e., had no effect on vegetation in the class), whereas all values above the flood event thresholds were used directly as a temporal multiplier (Figure 3). The 7-year flood events encompass the full time series of peak flow because few peak flows were below the 7-year event threshold and those that were below actually suppressed the model's disturbance rate, as desired. All values of temporal multipliers for rivers and creeks of each region are shown in Appendix V.

Table 6. Source USGS gage data for discharge dependent temporal multipliers.

Gage number & name	Region
09418500 MEADOW VALLEY WASH NR CALIENTE, NV	Clover Delamar & Tonopah; 56 years
10243700 CLEVE CK NR ELY, NV	Calcareous; 49 yrs
10244950 STEPTOE CK NR ELY, NV	Eureka; 43 years
10249280 KINGSTON CK BLW COUGAR CYN NR AUSTIN, NV	Toiyabe; 43 years
10251300 AMARGOSA RV AT TECOPA, CA	Mojave; 34 years
10293000 E WALKER RV NR BRIDGEPORT, CA	Eastern Sierra Nevada Range; 87 years
10301500 WALKER RV NR WABUSKA, NV	Walker; 88 years
10308200 E FK CARSON RV BLW MARKLEEVILLE CK NR MARKLEEVILLE	Carson Range; 49 years
10312000 CARSON RV NR FORT CHURCHILL, NV	Lahontan Basin; 99 years
10316500 LAMOILLE CK NR LAMOILLE, NV	Elko; 72 years
10321000 HUMBOLDT RV NR CARLIN, NV	Humboldt; 66 years
10352500 MCDERMITT CK NR MCDERMITT, NV	Black Rock Plateau; 61 years
13174500 OWYHEE RV NR GOLD CK, NV	Owyhee Desert; 82 years

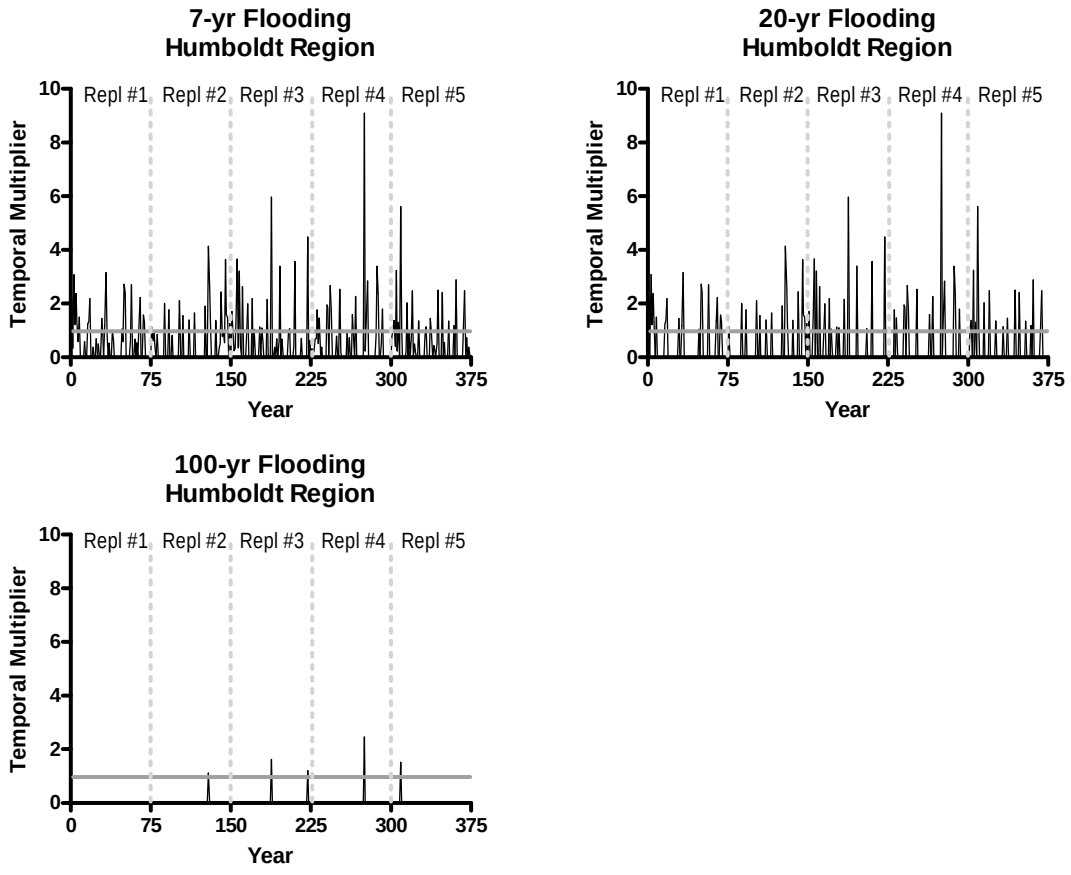

Figure 3. Riparian temporal multipliers for 7-year, 20-year, and 100-year flood events without climate change effects for the Humboldt River at the Carlin gage. For the 20-year and 100-year flood events, respectively, all values below their threshold were zero. Five replicates (Repl) are shown each per 75-year period. Flood events are based on annual peak flow. The gray line for temporal multiplier = 1 represented the “no-change” or neutral parameter line.

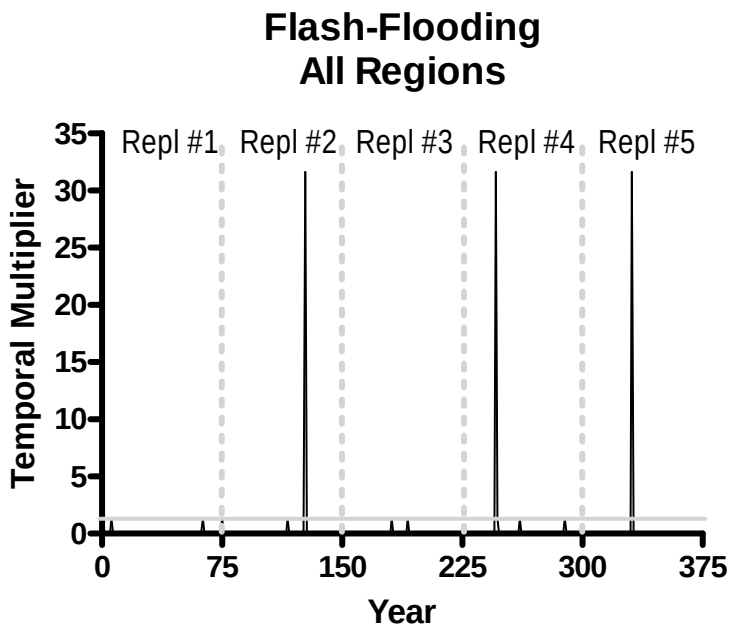

Figure 4. Flash-flooding temporal multipliers without climate change effects for Kyle Canyon. Only flood events >19-year occurrence were retained; all other values were made zero. Five replicates (Repl) are shown each per 75-year period. The gray line for temporal multiplier = 1 represented the "no-change" or neutral parameter line.

Two other discharge-dependent temporal multipliers applied to the Calcareous, Clover-Delamar, Mojave Desert, and Tonopah regions: flash-flooding in washes and exotic-species invasion in Warm Desert Riparian. We used the 39-year peak discharge time series from Kyle Canyon in the Spring Mountains near Las Vegas as the archetype for flash-flooding. Each value was divided by the temporal average discharge (dimensionless temporal multiplier series) and the time series was resampled to create five replicates of 75 years that was used in all four regions. Flash-flooding events were uncommon for the Mojave Desert as indicated by temporal multipliers (Figure 4).

For simplicity, exotic-species invasion was identical for three related temporal multipliers: exotic invasion in the Montane Riparian BpSs, and exotic-forb invasion and exotic-tree invasion in the Warm Desert Riparian BpS. The exotic-invasion disturbance generally encompasses forbs and trees, whereas the disturbance was split by forb and tree species in southern Nevada. We assumed that the variability of exotic species invasion was entirely dependent on average annual discharge of the same creeks and rivers used for peak flow (annual discharge is the average discharge among months, whereas peak discharge is the maximum discharge recorded). Years of greater than average annual discharge would favor the invasion of exotic forbs and trees. The rate of exotic forb invasion in VDDT models was, therefore, multiplied by the annual flow temporal multiplier. The temporal multipliers were obtained exactly as done for peak discharge, except annual discharge was used. Two examples representing the Humboldt and the Mojave Desert regions are shown in Figure 5. Appendix VI contains temporal multipliers for exotic invasion and exotic-species invasion in all regions.

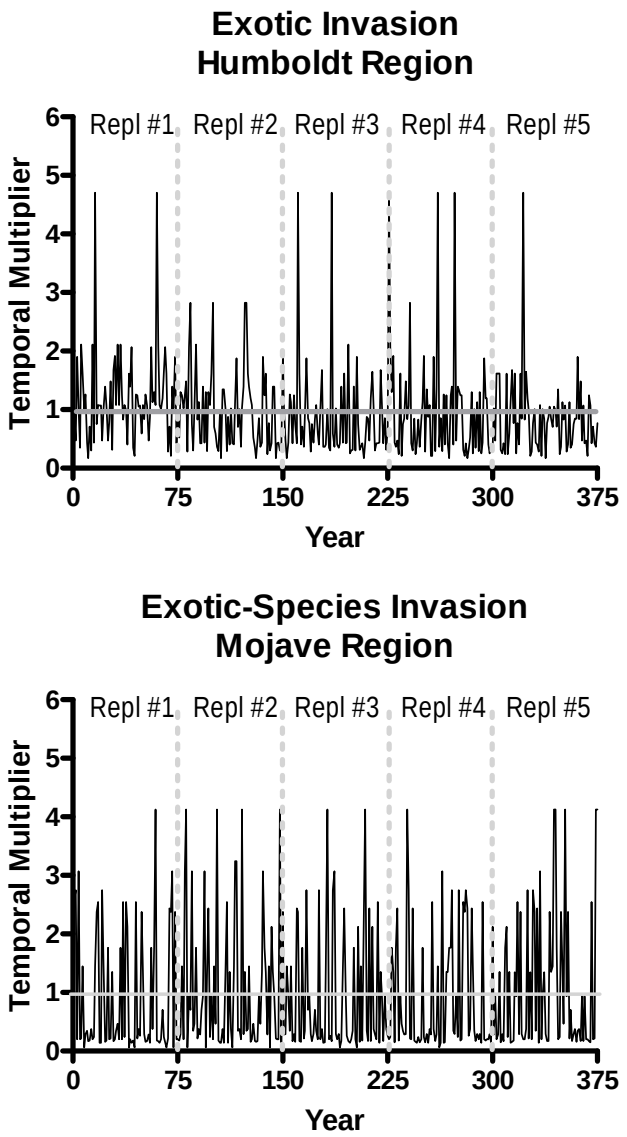

Figure 5. Exotic invasion and exotic-species invasion temporal multipliers without climate change effects for the Humboldt region at the Carlin gage of the Humboldt River and the Mojave Desert region at the Amargosa River Tecopa (CA) gage. Five replicates (Repl) are shown each per 75-year period. Flood events are based on average annual discharge. The gray line for temporal multiplier = 1 represented the "no-change" or neutral parameter line.

Fire temporal multipliers were obtained from data downloaded from the Federal Fire Occurrence Website for the whole western U.S.A. These data reflect fire activity under current management, which is generally intended to be full fire suppression. Time series of fire size (in acres) from 1980 to 2008 were extracted for the whole region with ARC GIS 9.3. As done above, each year's value was divided by the temporal average of the time series to create dimensionless temporal multipliers. Five replicate time series of fire activity each 75 years long were created by resampling the original time series; the first 28 years of the original series started the first replicate. One fire temporal multiplier series is illustrated for the Humboldt region in Figure 6. For some years, fire activity was multiplied by 8.25 compared to

baseline average fire activity; however suppressed fire activity (temporal multiplier < 1) was the norm for most years. All temporal multipliers are tabulated in Appendix VII.

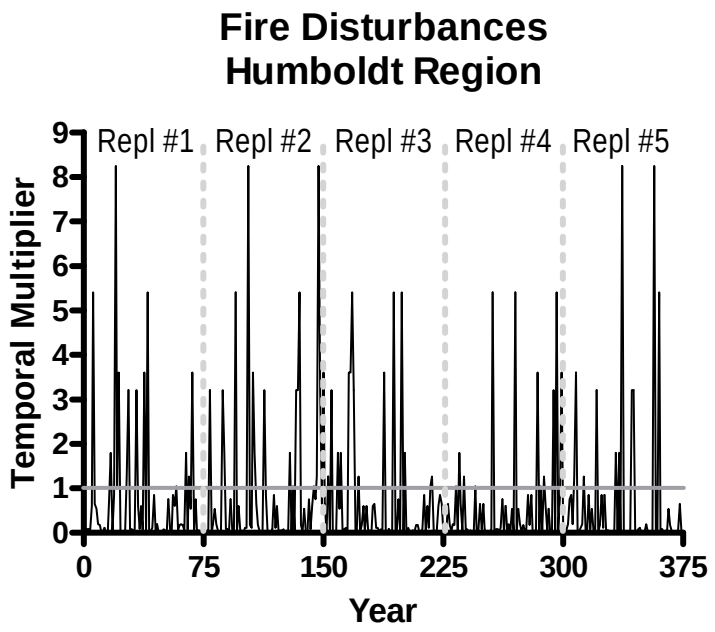

Figure 6. Fire temporal multipliers for replacement fire, mixed severity fire, and surface fire without climate change effects for the Humboldt region. Five replicates (Repl) are shown each per 75-year period. Data are total area burned per region. The gray line for temporal multiplier = 1 represented the "no-change" or neutral parameter line.

All other temporal multipliers were climate related: drought-induced mortality, insect/disease outbreaks, tree competition, annual grass invasion rate, tree invasion rate, very-wet-year, temperature, and freezing. The Palmer Drought Severity Index (PDSI; Heddinghaus and Sabol 1991) was used for all multipliers except temperature and freezing. PDSI is a long-term drought measure because it incorporates the cumulative influence of past monthly observations (Heddinghaus and Sabol 1991). PDSI values are available from 1895 to current for the four climatic regions of Nevada, in which we placed the 14 regions (using the majority rule for division boundaries dividing some regions) (Table 7). For each climatic region, we extracted PDSI values starting in 1935 to 2009 (75 years for the first replicate) and resampled this original 75-year time series four more times to obtain a total of five replicates. Negative PDSI values indicate drought, whereas positive ones represent wetter than average years. Severe droughts and very wet periods, respectively, have PDSI values <-3 and >3. Taylor and Beaty (2005) showed that the PDSI is highly negatively correlated to fire frequency and total area burned for forest types during pre-settlement in the northern Sierra Nevada: more fire was observed during increasingly drier years. The same relationship holds for average temperature (Westerling et al. 2006). This, however, does not apply to shrublands that must first experience consecutive wetter than average years to accumulate fine fuels that will more likely burn in a dry year immediately following the wet year sequence (Westerling and Bryant 2008; Westerling, *in press*).

Table 7. Climatic divisions of Nevada and nested regions.

Region	Climate Division
Black Rock Plateau	1
Sierra Nevada	1
Eastern Sierra Nevada Range	1
Humboldt	1
Lahontan Basin	1
Calcareous	2
Elko	2
Eureka	2
Owyhee Desert	2
Clover Delamar	3
Toiyabe	3
Tonopah	3
Walker Corridor	3
Mojave	4

Temporal multipliers for drought-induced mortality, insect/disease outbreaks, and tree competition were all identically calculated from PDSI because we assumed that more severe droughts cause increased mortality and tree competition, whereas wetter conditions suppressed these disturbances. Because PDSI can be negative, therefore incompatible with VDDT, we chose a negative exponential function to create positive values that increased exponentially with smaller (more negative) PDSI values:

$$\text{Temporal multiplier for drought mortality, insect/disease outbreaks, and tree competition} = 0.6 * e^{-0.6 * PDSI}$$

The parameters of this function were chosen such that PDSI values close to -3 were slightly greater than 3 (actually, 3.63) and that very severe droughts with PDSI as high as -5.2 translated into slightly more than doubling of the temporal multipliers (13.8). Another consideration was that a mild drought characterized by a PDSI of -1 would about equal to a neutral temporal multiplier value of 1. Figure 7 demonstrates the relationship between PDSI and its temporal multiplier for all climatic divisions.

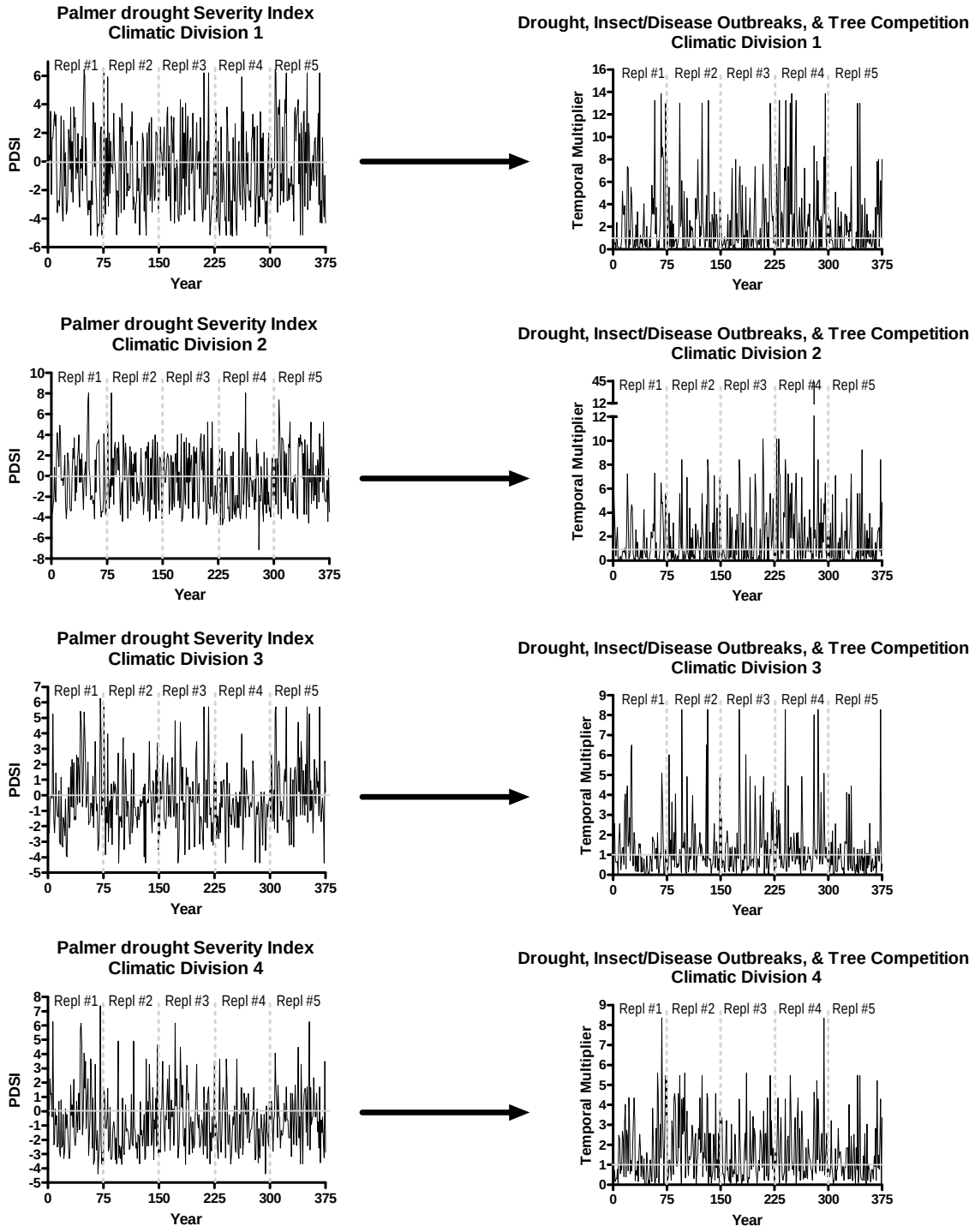

Figure 7. Palmer drought severity index (PDSI) time series and calculated drought-related temporal multipliers without climate change effects for the four climatic divisions of Nevada. Five replicates (Repl) are shown each per 75-year period. The gray line for PDSI = 0 represented average drought conditions, whereas the gray line for the drought temporal multiplier = 1 represented the "no-change" or neutral parameter line.

Temporal variability for annual grass invasion and tree (mostly pinyon and juniper) invasion rates were dependent on drought levels: greater drought severity, therefore lower soil moisture, was detrimental to recruitment and growth and, conversely, greater soil moisture favored the spread of annual grasses and trees (Bradley 2009b; Brown et al. 2004; Smith et al. 2000). We assumed that tree invasion was a much slower process than annual grass invasion. This implies that PDSI was directly related to the variability of these invasion rates:

Annual grass invasion

PDSI > 0, temporal multiplier = $(0.75 \times e^{0.75 \times PDSI})^{0.5}$

PDSI ≤ 0, temporal multiplier = $0.75 \times e^{0.75 \times PDSI}$

Tree invasion

PDSI > 0, temporal multiplier = $(0.2 \times e^{0.8 \times PDSI})^{0.5}$

PDSI ≤ 0, temporal multiplier = $0.2 \times e^{0.8 \times PDSI}$

Similarly, the PDSI time series were used to calculate the variability in very wet years, which is a source of mortality for some sub-xeric BpSs. Very wet years were assumed to occur for PDSI > 2, but considered null for PDSI ≤ 2. Furthermore, we assumed that the effect of very wet years increased by the square of the PDSI after correction to indicate an accelerating effects of water spread on water-logged soils that cannot absorb any more water. Water-logged soils kill roots of subxeric shrubs:

Very-wet-year

PDSI > 2, temporal multiplier = $(PDSI - 2)^2$

PDSI ≤ 2, temporal multiplier = 0

We illustrated the temporal multipliers for annual grass invasion, tree invasion, and very-wet-year using climatic region #1 (Figure 8; respectively, values in Appendices VIII-X).

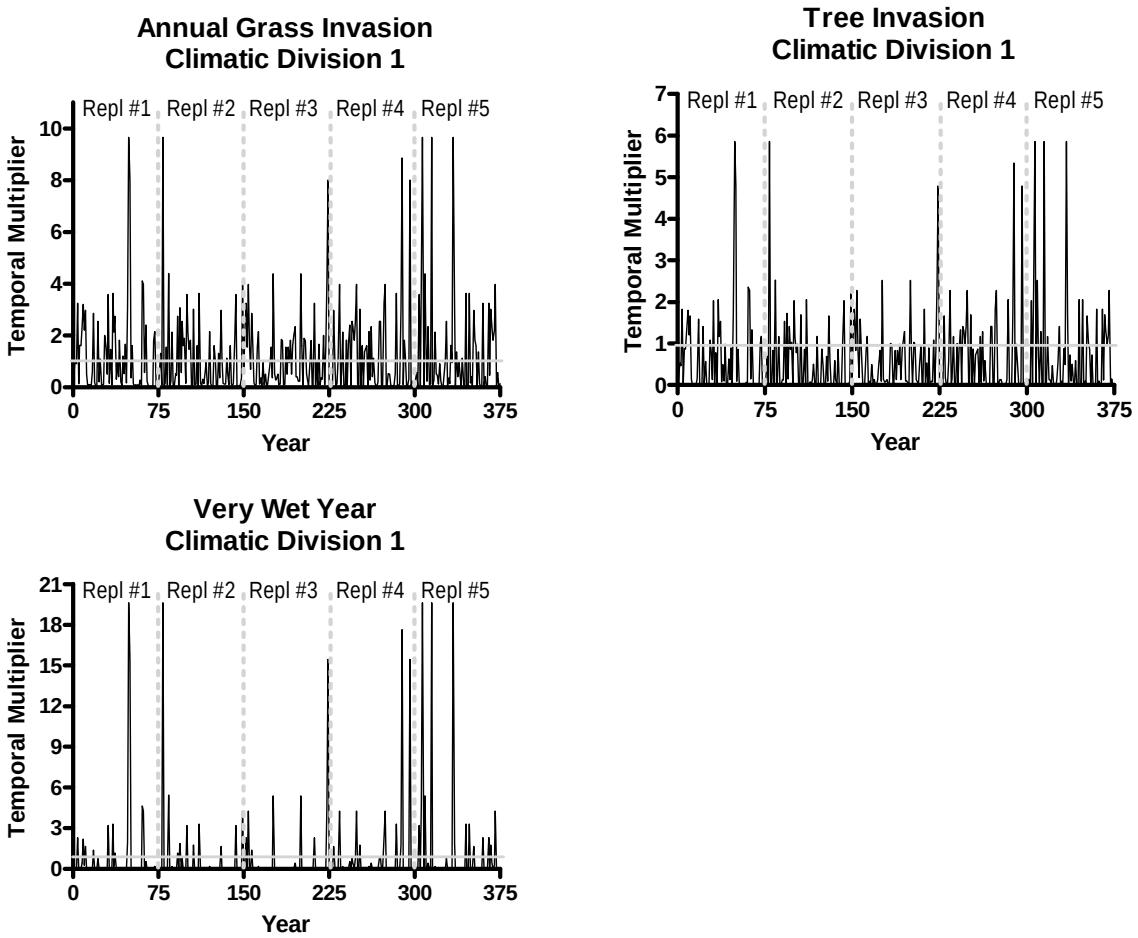

Figure 8. Temporal multipliers of annual grass invasion, tree invasion, and very wet years without climate change effects for the first climatic divisions of Nevada. Five replicates (Repl) are shown each per 75-year period. The gray line for the drought temporal multiplier = 1 represented the "no-change" or neutral parameter line.

The temporal multiplier for temperature only applied to subalpine conifers. Increasing temperature favors tree ring growth (Salzer et al. 2009) and speed of succession for subalpine conifers. Dr. Matt Salzer at the University of Arizona's Laboratory of Tree Ring Research kindly shared a 2002-year tree ring width time series of ancient bristlecone pine from Mount Washington from the southern Snake Range (The Long Now Foundation's Keyhole property) (Figure 9). We divided each entry of the time series by the temporal average to obtain the dimensionless temporal multipliers. We extracted five 75-year time series from 1628 AD to 2002 for the non-climate change period, which included a variety of cooling and warming periods (Figure 10).

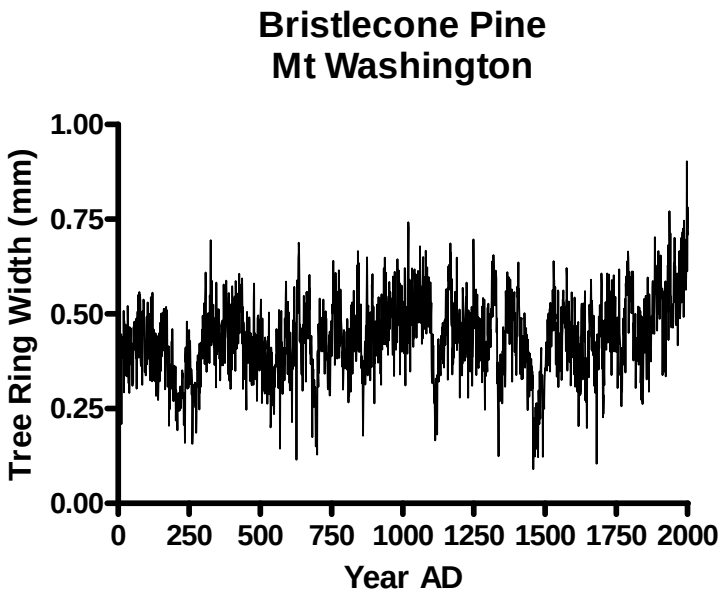

Figure 9. Tree ring width of ancient bristlecone pine from Mt. Washington in the southern Snake Range, Nevada. Data provided by Dr. Matt Salzer from the University of Arizona's Laboratory of Tree Ring Research.

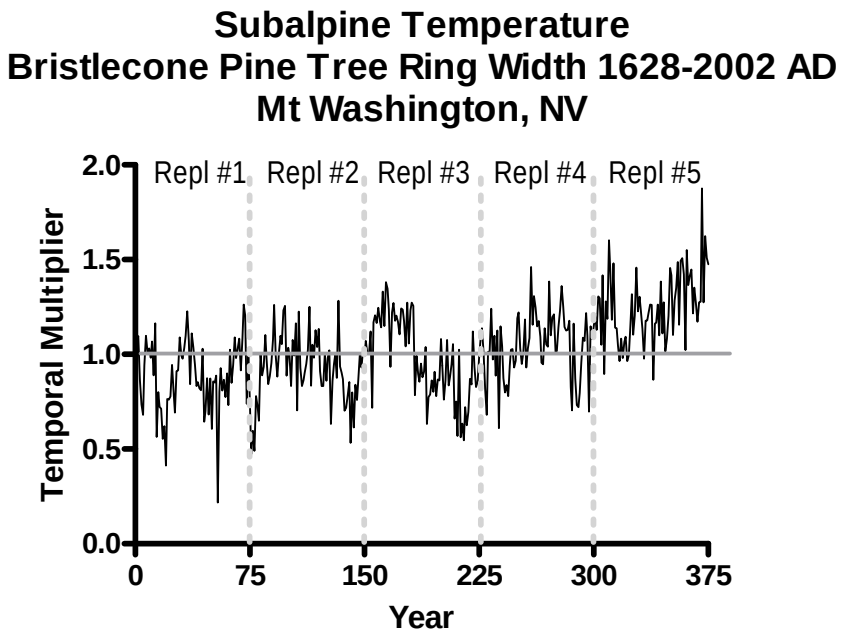

Figure 10. Temporal multiplier for subalpine temperature obtained from tree ring widths (1628 to 2002 AD) of ancient bristlecone pine from Mt. Washington in the southern Snake Range, Nevada. Data provided by Dr. Matt Salzer from the University of Arizona's Laboratory of Tree Ring Research. Five replicates (Repl) are shown each per 75-year period. The gray line for temporal multiplier = 1 represented the "no-change" or neutral parameter line.

The last temporal multiplier series was for prolonged (several consecutive days) freezing causing mortality in the Paloverde-Mixed Cacti BpS at the very southern tip of Nevada. We obtained a time series of minimum monthly temperature from the Searchlight, Nevada, weather station. We selected the minimum of any month as the time series to resample. The original temporal multiplier was calculated as a deviation from the 32^0C:

Temperature temporal multiplier =
If temperature ≤ 32^0C then (33- temperature)
else 0.

The resulting time series was resampled to create five 75-year replicates (the original series was not used; Figure 11).

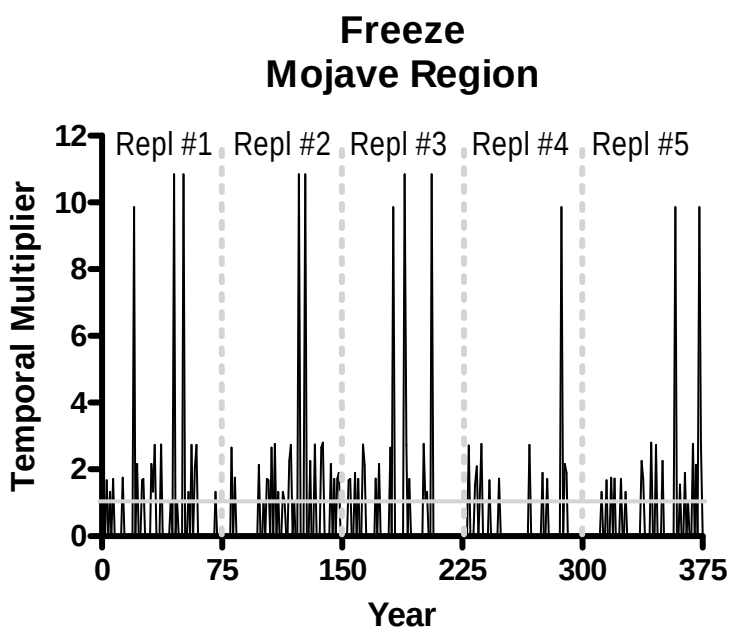

Figure 11. Temporal multiplier freeze obtained based on minimum temperature from the weather station in Searchlight, Nevada. Five replicates (Repl) are shown each per 75-year period. The gray line for temporal multiplier = 1 represented the "no-change" or neutral parameter line.

Temporal multipliers with climate change

Modification of temporal multipliers depends on the predicted changes in greenhouse gases, temperature, and precipitation for a period at least matching the duration of our simulations: we simulated 50 years from the 75 years we could accommodate. In turn, these predicted climatic changes determined hypothesized ecological effects of climate change on temporal multipliers.

Most of Nevada is under the strong influence of the Pacific Ocean; therefore we used predictions made for the Northern Sierra Nevada to find trends applicable to all of Nevada. Predictions for temperature and precipitation were obtained from the Parallel Climate Model (PCM; Dettinger et al. 2004) with the A1Fi business-as-usual emissions scenario (similar to the A2 scenario [IPCC 2007]). These modifications to the ecological models require a full time series of future climate projections (i.e., every year from 2000-2050). While data from the other GCMs were available for this area, a downscaled time-series of data for this area was not readily available. Thus, we focused only on the results of the PCM GCM for

this portion of the analysis. We obtained a greenhouse gas concentration prediction from IPPC (2007: Figure 3.1). The overall scenario is for a hotter climate by about 3°C with greater greenhouse gas concentration (Figure 12), but with the same total amount of average precipitation (Figure 13).

The greatest uncertainty for future climate forecasting (high divergence among Global Circulation Models) will be for a western shift of the western boundary for the monsoonal effect (i.e., summer precipitation), which currently penetrates into eastern Nevada by no more than 60 miles (97 km; Egan Range may be the limit) and into the Mojave Desert as west as the Sheep Range. We assumed that the Calcareous, Clover-Delamar, and Mojave Desert regions of Nevada would experience a greater amount of summer precipitation; therefore less drought. Presumably, increased summer precipitation would change fire regimes and erosion patterns.

We developed predicted ecological impacts resulting from climate change (hypotheses of change) for each type of BpS based upon the consequences of Figure 12 and Figure 13. Some hypotheses were directly supported by recent publications, albeit few, whereas the remaining hypotheses were inferred:

- Directly supported hypotheses:
  - Increased dispersal of non-native species (annual grasses, forbs, and trees) caused by CO_2 fertilization of plant growth during wetter than average years (Bradley 2009b; Brown et al. 2004; Smith et al. 2000)
  - Decreased dispersal of non-native species (annual grasses, forbs, and trees) during drier than average years regardless of CO_2 concentrations (Bradley 2009b; Brown et al. 2004; Smith et al. 2000)
  - Higher tree mortality during longer growing season droughts (Pennisi 2009)
  - Longer period of low flows caused by earlier snowmelt (Dettinger et al. 2004; Maurer 2007; Stronestrom and Harrill 2006)
  - Greater severe flood variability due to greater frequency of rain-on-snow events (Dettinger et al. 2004; Maurer 2007), which would favor cottonwood and willow recruitment on currently regulated rivers and creeks
  - Longer period of groundwater recharge during colder months with low evapotranspiration and greater percentage of rain *versus* snow (more effective recharge) (Stronestrom and Harrill 2006; personal communication, Dr. Rick Niswonger, USGS Carson City, 2008)
  - More stable discharge (buffered from precipitation) for springs, seeps, wet meadows, creeks, and rivers on carbonate geology and, conversely, less stable discharge on non-carbonate geology (personal communications, Drs. David Prudik [retired] and Rick Niswonger, USGS Carson City, 2008)
  - More frequent, larger fires in forested systems (Brown et al. 2004; Westerling and Bryant 2008; Westerling, *in press*)
  - Increased growth and recruitment of subalpine trees due to increased tree line temperature regardless of CO_2 fertilization (Salzer et al. 2009; personal communication, Dr. Hugh Safford, US Forest Service, University of California at Davis 2008)

- Inferred hypotheses:
  - Longer fire return intervals in shrubland systems due to increased drought frequency preventing fine fuel build up (Westerling and Bryant 2008; Westerling, *in press*)
  - Increased dispersal of pinyon and juniper in shrublands caused by CO_2 fertilization during wetter than average years (Tausch and Nowak 1999)
  - Greater conifer and deciduous tree species recruitment and growth in wetlands/riparian due to drought and CO_2 fertilization (Brown et al. 2004)
  - Impaired recruitment of willow and cottonwood due to descending peak flows occurring one month earlier and limited ability of these species to flower one month earlier in cold drainages (Maurer 2007)
  - Faster growth of fast-growing native tree species (Brown et al. 2004; personal communication, Dr. Hugh Safford, US Forest Service, University of California at Davis 2008)

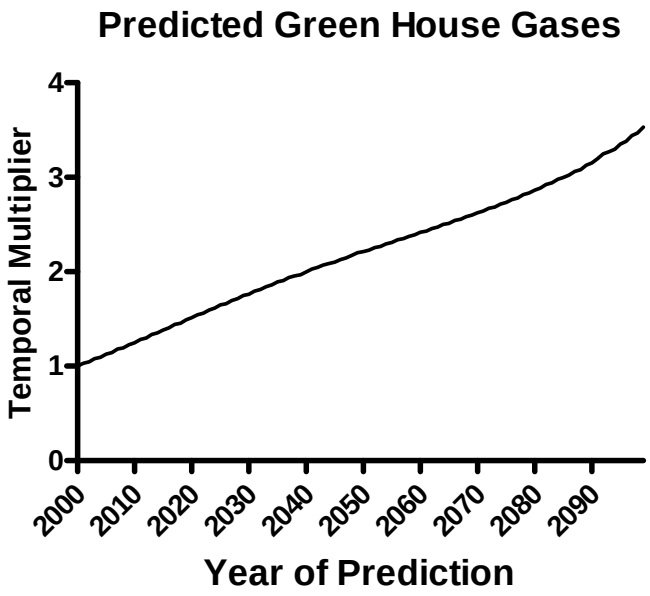

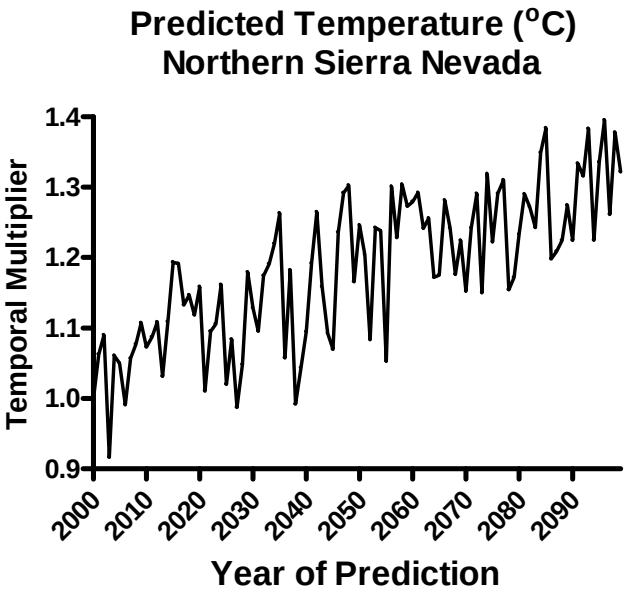

Figure 12. Temporal multiplier for global green house gases (based on IPCC 2007) and temperature for the Northern Sierra Nevada (based on Dettinger et al. 2004) under the "business-as-usual" (A1Fi for PCM; A2 for IPCC) climate change scenario. Temperature raw data obtained from Dr. M. Dettinger, USGS, 2009 based on the PCM simulations. The green house gases and temperature temporal multipliers were each calculated by dividing each yearly value by the value of the first year of the time series.

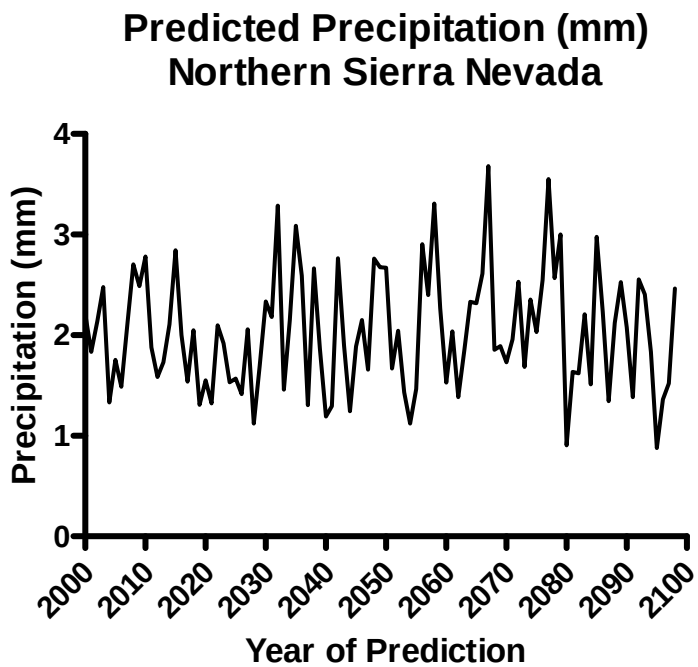

Figure 13. Temporal multiplier of precipitation (mm) for the Northern Sierra Nevada (based on Dettinger et al. 2004) under the "business-as-usual" (A1Fi) climate change scenario. Precipitation raw data obtained from Dr. M. Dettinger, USGS, 2009 based on the PCM simulations.

The peak discharge temporal multipliers without climate change were modified for climate change (+CC) under the simple assumptions that peak flows and their variability increase with time due to more frequent rain-on-snow events and early snow melt. A heuristic relationship was built in the absence of a more mechanistic discharge modification equation:

Peak Flow_{+CC} temporal multiplier

If *Modifier*(time-step) ≥ 0,

= Peak Flow_{-CC} temporal multiplier × (1 + *Modifier*[time-step] × $\log_{10}$[time-step])

If *Modifier*[time-step)] < 0,

= 0

and

$$\textit{Modifier}(\text{time-step}) = (U_i - \log_{10}[\text{time-step}] \times U_j) \times (1 - e^{-0.3 \times [\textit{time-step} - 1]}),$$

where U_i is the ith random number draw (0≤U<1) from a uniform distribution. Without the *Modifier* equation, peak flow would deterministically increase by three times (i.e., 3 = 1+log(100)) over 100 years; however, the *Modifier* equation prevents this by introducing variability and damping. The first damping factor is the negative exponential that is zero or near zero for the first years, but rapidly become equal to one with time, thus having no damping effect after 20 years. The second damping factor is also the source of strong variability. As both random numbers are drawn in the *Modifier* equation, the outcome will favor negative values over time because of the logarithmic function's contribution that increases with time, which will cause either zero flow (dry creeks and rivers as expected on especially non-carbonate rocks) or reduced flow for positive outcomes. As a result, peak flow becomes highly variable

(Figure 14 right side; Appendix XI). The new time series by regions were used to obtain 7-year, 20-year, and 100-year flood events using the same rules as described above.

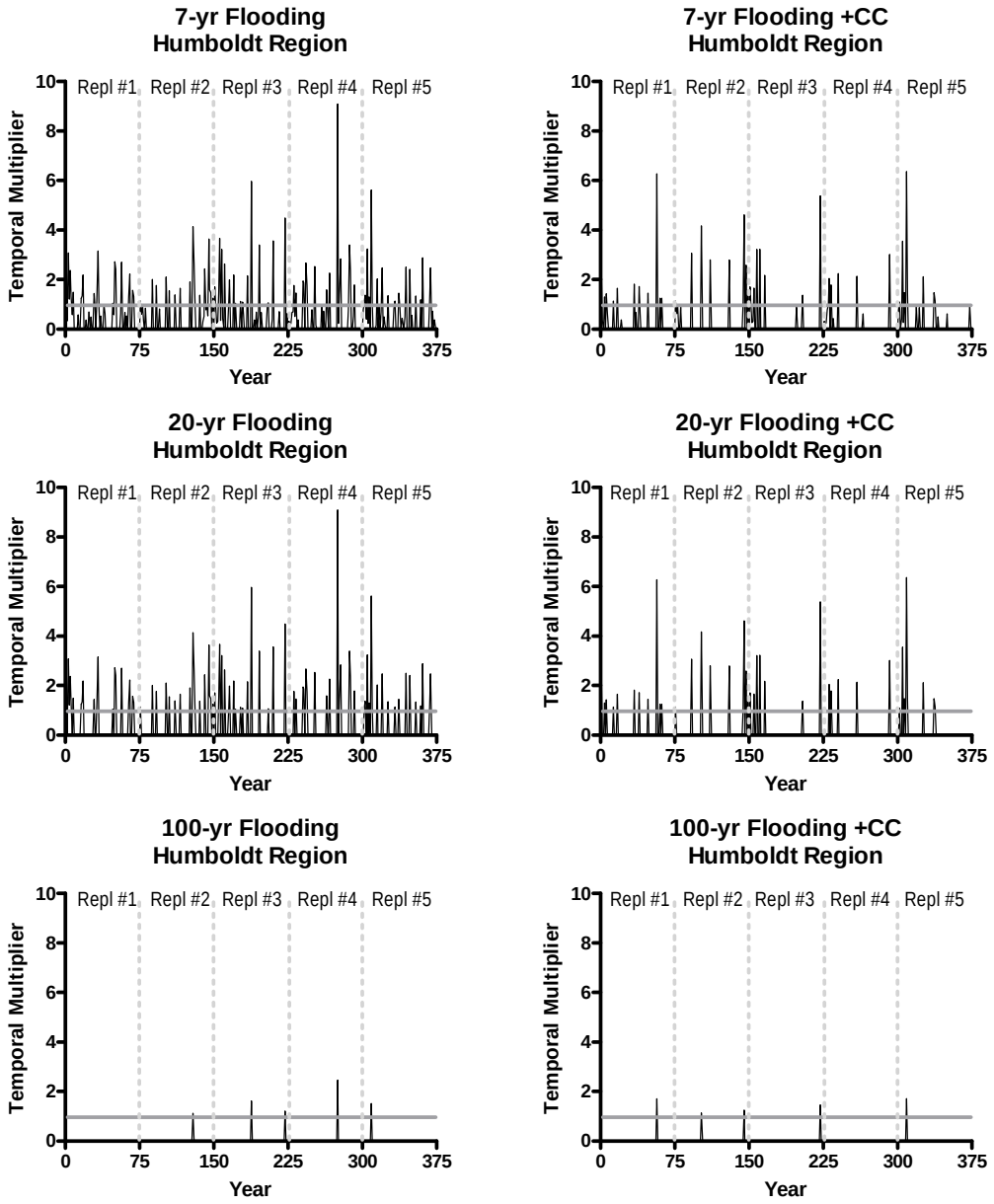

Figure 14. Peak flow temporal multipliers without climate change (left) versus with climate change effects (right) used to illustrate heuristic transformation using the Humboldt region. Difference between without and with climate change are due to random number draws. Five replicates (Repl) are shown each per 75-year period. Flood events are based on average annual discharge. The gray line for temporal multiplier = 1 represented the "no-change" or neutral parameter line.

The same previous equations for modifying peak discharge were used to generate temporal multipliers for flash flooding and exotic-species invasion. For flash flooding, peak discharge from Kyle Canyon, and not the temporal multiplier, was the input data for the equation and peak discharge with climate change

was the output. The original temporal multiplier was obtained by dividing each year's values by the new temporal average. Five replicates of 75 years each for the four flash-flooding regions (Calcareous, Cover-Delamar, Mojave, and Tonopah) where obtained by complete resampling. The temporal multipliers for the Mojave Region are shown in Figure 15 with the remaining data presented in Appendix XII.

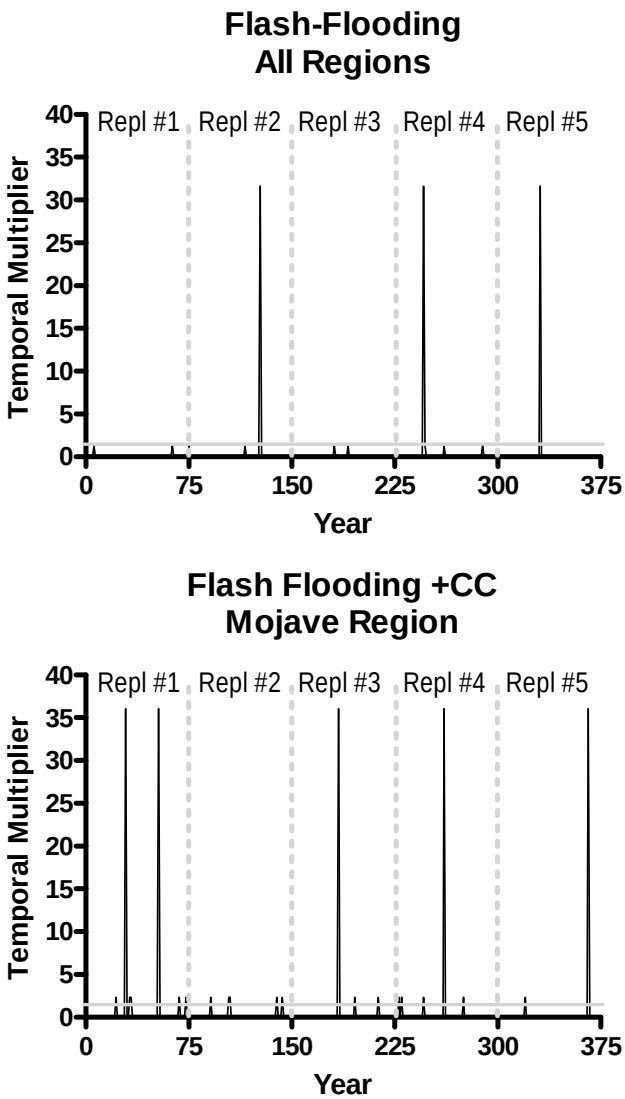

Figure 15. Flash-flooding temporal multipliers without (top) and with climate change (bottom) effects for the Mojave Region. Only flood events >19-year occurrence were retained; all other values were made zero. Five replicates (Repl) are shown each per 75-year period. Different flood events are due to random number draws. The gray line for temporal multiplier = 1 represented the "no-change" or neutral parameter line.

We hypothesized that carbon from enhanced atmospheric greenhouse gases would fertilize exotic forb species growth, seed or root production, and invasion of uninfested areas if the floodplain was sufficiently wetted by annual (not peak) flows (Bradley 2009b; Smith et al. 2000). The temporal multiplier for exotic forb invasion was obtained from the same equations as used for peak discharge

(but with annual discharge) with the exception one inserting the temporal multiplier for greenhouse gas in the equation:

Exotic Forb Invasion$_{+CC}$ temporal multiplier
= Exotic Forb Invasion$_{-CC}$ temporal multiplier × (1 + *Modifier*[time-step] × TM_{GHG} × $\log_{10}$[time-step]),

where TM_{GHG} is the temporal multiplier for GreenHouse Gases, which is predicted to increase smoothly over time. Using the Humboldt and Mojave regions for illustration, Figure 16 (right side) clearly shows a strong influence of climate change on this parameter. The full data for all regions is presented in Appendix XIII.

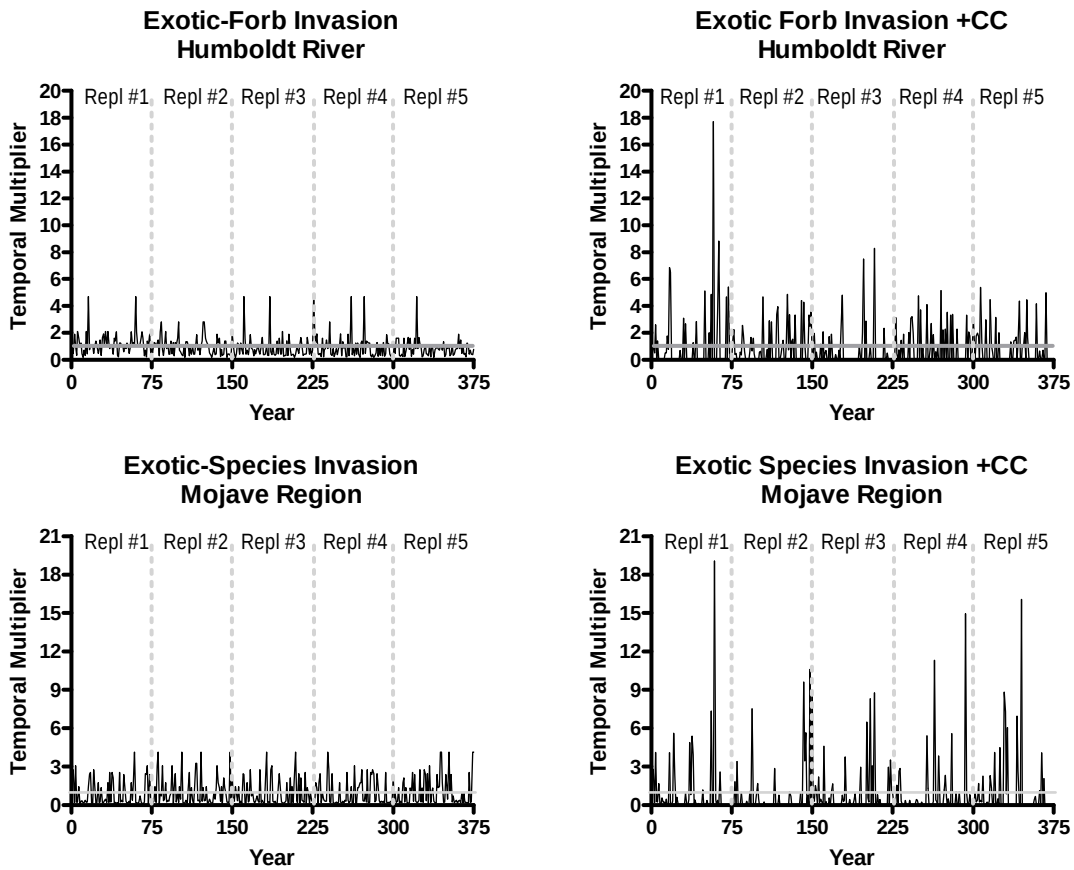

Figure 16. Exotic invasion and exotic-species invasion temporal multipliers without (left) and without climate change effects (right) for the Humboldt River at the Carlin gage and the Mojave Desert region at the Amargosa River Tecopa (CA) gage. Five replicates (Repl) are shown each per 75-year period. Flood events are based on average annual discharge. The gray line for temporal multiplier = 1 represented the "no-change" or neutral parameter line.

With the exception of subalpine temperature and freezing in the Mojave Desert, all other temporal multipliers involved modifications to drought, including fire. Climate change modifications to drought were differently obtained than with previous temporal multipliers; therefore, side by side comparisons of no climate change and climate change effects were no longer possible. We assumed that the new PDSI under climate change would show drier (higher temperature with same total precipitation would

create more evapotranspiration) conditions, which means that positive PDSI values would become smaller and that negative values would become even more negative. Although this assumption was conceptually true, the mathematical implementation of the modification is not straightforward, in part because several variables enter into the computation of PDSI (not just temperature) and its time step is monthly, not yearly (yearly PDSI is obtained through averaging) (Heddinghaus and Sabol 1991):

$$PDSI_t = 0.897 \times PDSI_{t-1} + \text{calibrated change in soil moisture}_t$$

where *t* is the month and the calibrated change in moisture can be ≥ or < zero (Heddinghaus and Sabol 1991).

We alternatively chose to mine a 2,300-year old time series of western juniper ring width from the Walker River basin of western Nevada and eastern California (Biondi et al. 2007) to find drought conditions from the past. The narrower the tree ring, the less soil moisture available during the year of growth. Biondi et al. (2007) expressed the time series as departure from the mean (normalized to zero) and used novel statistics to detect severe drought periods (usually, ≥7 years of consecutive below average tree ring width — negative values). About 13 severe droughts were detected during the last 2,300 years, including the Dust Bowl period. Conveniently, the distribution of the normalized values around the mean of zero behaved like the PDSI.

We applied western juniper data to all climatic regions of Nevada because Biondi et al. (2007) showed very high correlation ($r > 0.7$) of this time series to other tree ring time series of Nevada deposited in the a national databank. The procedure by which we obtained replicate temporal multipliers was involved:

1. The 2,300-year time series was segmented in group of five consecutive years. The purpose for segmentation was to preserve periods of climate that may retain periods of drought, average, and wet years;
2. The average of each 5-year was calculated and averages were sorted from driest to wettest;
3. About half of the time series was retained from the driest to the slightly wettest groups, thus deleting the wettest averages, because our goal was to simulate drier future conditions;
4. We randomly selected about 20 groups and recreated time series by stringing together groups as if they had always been consecutive years. This procedure was repeated 65 times (five 75-year replicates × 13 regions), which was extremely tedious;
5. Each new time series was flipped (not sorted) to create conditions of increasing drought over time.
6. Because tree ring width was expressed as a deviation from zero, the narrowest rings were negative, which is incompatible with temporal multipliers. Therefore, we used a negative exponential function as done for PDSI and with trial-and-error parameter fitting imitating values found for drought temporal multipliers without climate change:

   Drought or insect/disease outbreak temporal multipliers +CC =
   if tree-ring deviation ≤ 0, then $-(\text{tree-ring deviation} \times e^{-0.2656 \times \text{tree-ring deviation}})$,
   else then 0.
7. Ten replicate temporal multipliers among the 65 were identified because they showed less drying over time; these least "droughty" replicates became temporal multipliers for the

Calcareous region that was predicted to receive more monsoonal precipitation, whereas the next five of the least droughty became the temporal multipliers for the Clover-Delamar region also expected to receive more monsoonal precipitation. The 55 other replicates were randomly assigned to the remaining regions.

The drought temporal multipliers for the Humboldt region is shown in Figure 17 (all values in Appendix XIV). Notice the obvious upswing of drought values with increasing years by replicate.

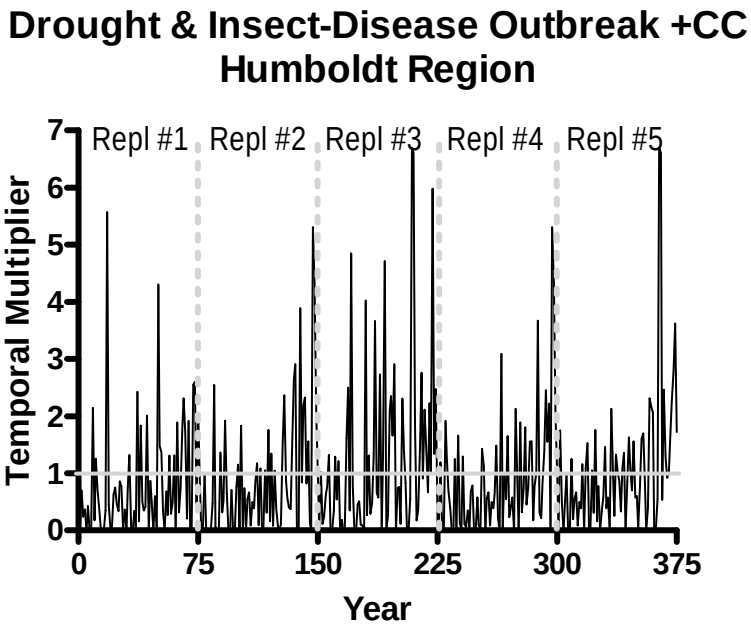

Figure 17. Drought and insect-disease outbreak temporal multipliers with climate change effects for the Humboldt region. Five replicates (Repl) are shown each per 75-year period. Values are based on a 2,300-years time series of western juniper tree rings. The gray line for temporal multiplier = 1 represented the "no-change" or neutral parameter line.

The same pattern was created from tree ring deviations for the tree competition and tree encroachment temporal multipliers but using a different negative exponential function with a less variable outcome (we assumed that tree competition and loss of understory species due to tree encroachment in late succession was a more buffered process):

$$\text{Tree competition or tree encroachment temporal multiplier} = 20 \times e^{-(\text{tree-ring deviation} + 4)}.$$

Again, we show the result for the Humboldt region in Figure 18 (Appendix XV).

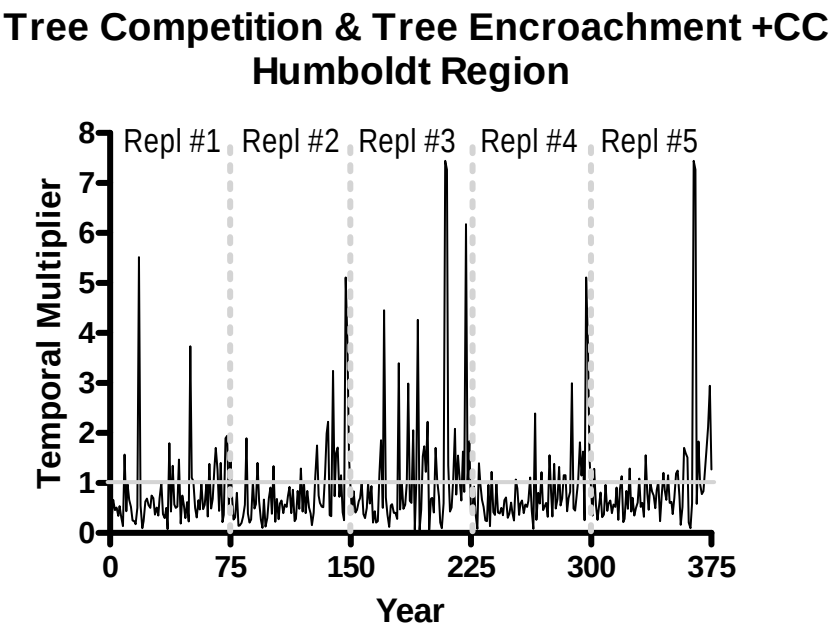

Figure 18. Tree competition and tree encroachment temporal multipliers with climate change effects for the Humboldt region. Five replicates (Repl) are shown each per 75-year period. Values are based on a 2,300-years time series of western juniper tree rings. The gray line for temporal multiplier = 1 represented the "no-change" or neutral parameter line.

Previously without climate change, we calculated the very-wet-year temporal multipliers in the absence of climate change effects, we elevated the PDSI by the square. The PDSI reached higher values than tree ring deviations; therefore, we used a more "aggressive" exponential function for climate change effects and tree ring deviations that started with a tree ring deviation value of 1 (2 for PDSI) to make this temporal multiplier more comparable between tree rings and PDSI (Figure 19; Appendix XVI):

Very-wet-year temporal multiplier =
If tree ring deviation ≥ 1, then $e^{(\text{tree ring deviation} - 1)}$
else then 0.

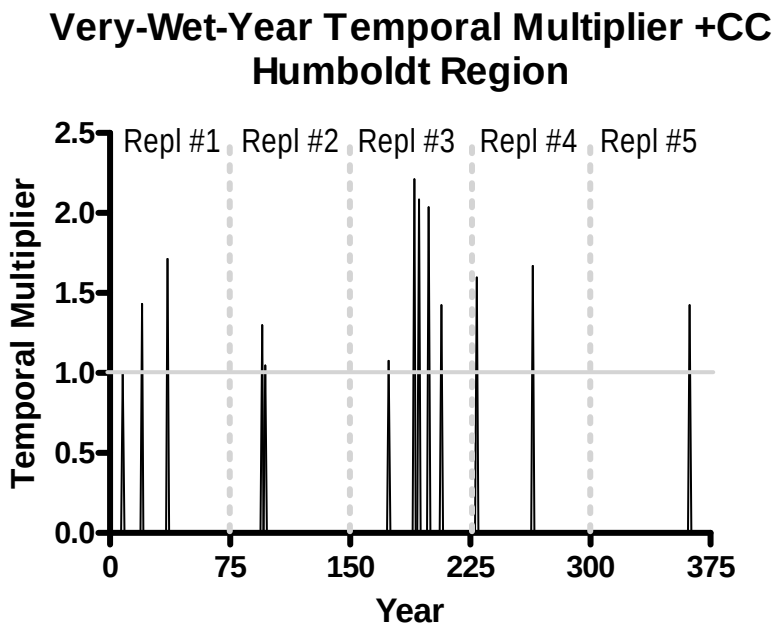

Figure 19. Very-wet-year temporal multipliers with climate change effects for the Humboldt region. Five replicates (Repl) are shown each per 75-year period. Values are based on a 2,300-years time series of western juniper tree rings. The gray line for temporal multiplier = 1 represented the "no-change" or neutral parameter line.

The tree ring deviations were used to calculate temporal multipliers for future replacement fire, mixed severity fire, and surface fire because of the tight relationship between drought and fire activity. The temporal multipliers for replacement fire were calculated differently than for mixed severity and surface fire. Forested BpSs, with the exception of pinyon-juniper and mountain mahogany woodlands, experience greater fire activity with greater drought because their standing biomass only requires ignition (Taylor and Beaty 2005; Westerling et al. 2006; Westerling and Bryant 2008; Westerling in press). Forests are usually not water limited. Conversely, shrublands being water limited normally have no to little fine fuels to carry fire; therefore fire activity increases when fine fuels first build up during two or more years of consecutive of above average soil moisture followed by a dry year (Westerling and Bryant 2008; Westerling, in press). These assumptions were imbedded in the equations for fire temporal multipliers based on tree ring deviations. For simplification, the temporal multiplier for replacement fire, which is the only fire regime in shrublands and is less common in forests, was calculated following the shrubland assumptions. The temporal multipliers for mixed severity fire and surface fire (we used the same temporal multipliers), which are dominant regimes in forests, were calculated following the forest assumptions.

We chose two consecutive years of above average soil moisture (positive tree ring deviations) followed by a dry year (negative tree ring deviation) using the Gompertz equation ($y = [1/a]/[1+e^{bx}]$) , which has a convenient shape compatible with positive and negative *x* values, to calculate the replacement fire multipliers:

$$\text{Replacement fire temporal multiplier}\{t\} = e^{(\text{tree-ring deviation}\{t-2\} + \text{tree-ring deviation}\{t-1\})} \times (1/0.8808)/(1+e^{2 \times \text{tree-ring deviation}\{t\}}),$$

where *t* is time (*t-2* is two years ago) and *a = 0.8808* and *b = 2* are fitting constants. The Gompertz part of the equation has less weight than the first exponential because more importance was given to fine fuel build up in the first exponential function. Greater droughts on the third year were not assumed to equate with greater storm activity.

For mixed severity fire and surface fire, less importance was given to fuel build up in the previous year (the Gompertz equation) and more weight to drought during the current year:

$$\text{Replacement fire temporal multiplier}\{t\} = (1/0.33)/(1+e^{-1.75 \times \text{tree-ring deviation } \{t-1\} -1.4}) \times e^{-(\text{tree-ring deviation } \{t\} + 1)}.$$

Figure 20 shows temporal multipliers for replacement fire (Appendix XVII for all regions) and mixed severity/surface fire from the Humboldt region (Appendix XVIII for all regions).

Tree ring deviations were used to calculate two other temporal multipliers: annual grass invasion and tree invasion. We assumed that both increased CO_2 and soil moisture fertilized annual grasses and tree invasion into shrublands; however, soil moisture was the most limiting factor. For annual grasses, the temporal multiplier for greenhouse gases (Figure 12) had a linear influence on annual grass dispersal, whereas tree ring deviations were given an exponential role:

$$\text{Annual grass invasion temporal multiplier}_t = \text{temporal multiplier of greenhouse gases}_t \times e^{\text{tree ring deviation}_t}.$$

Because our hypotheses assume a greater frequency of future droughts, annual grass invasion often decreases with time (see variation among replicates in Figure 21; other regions in Appendix IXX).

Tree invasion is a slower process of mostly pinyon and juniper, sometimes higher elevation conifers, colonizing shrublands because trees grow slowly in the arid west. We simply dampened the rate of invasion used for annual grass invasion with power functions:

$$\text{Tree invasion temporal multiplier}_t = \text{If (temporal multiplier of greenhouse gases}_t \times e^{\text{tree ring deviation}_t} < 1\text{), then (temporal multiplier of greenhouse gases}_t \times e^{\text{tree ring deviation}_t})^2 \text{ else (temporal multiplier of greenhouse gases}_t \times e^{\text{tree ring deviation}_t})^{0.5}.$$

The role of dampening is easily seen by comparing the upper graph (annual grass invasion) and lower graph (tree invasion) of Figure 21 (Appendix XX for the tree invasion multipliers in other regions).

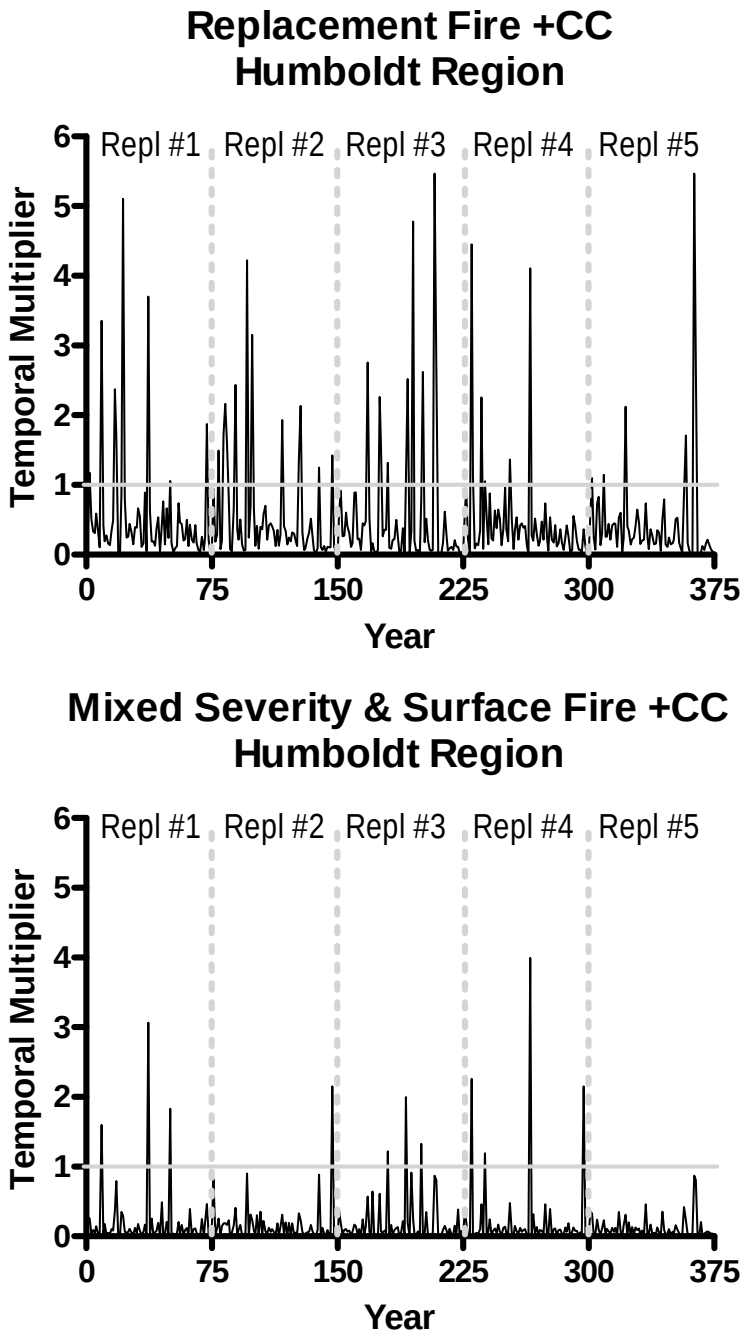

Figure 20. Replacement, mixed severity, and surface fire temporal multipliers with climate change effects for the Humboldt region. Five replicates (Repl) are shown each per 75-year period. Values are based on a 2,300-years time series of western juniper tree rings. The gray line for temporal multiplier = 1 represented the "no-change" or neutral parameter line.

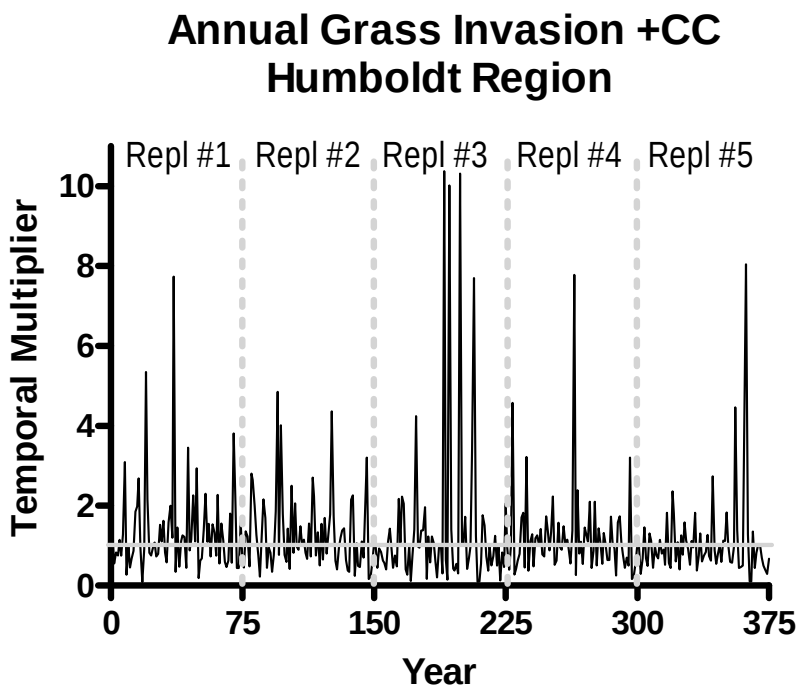

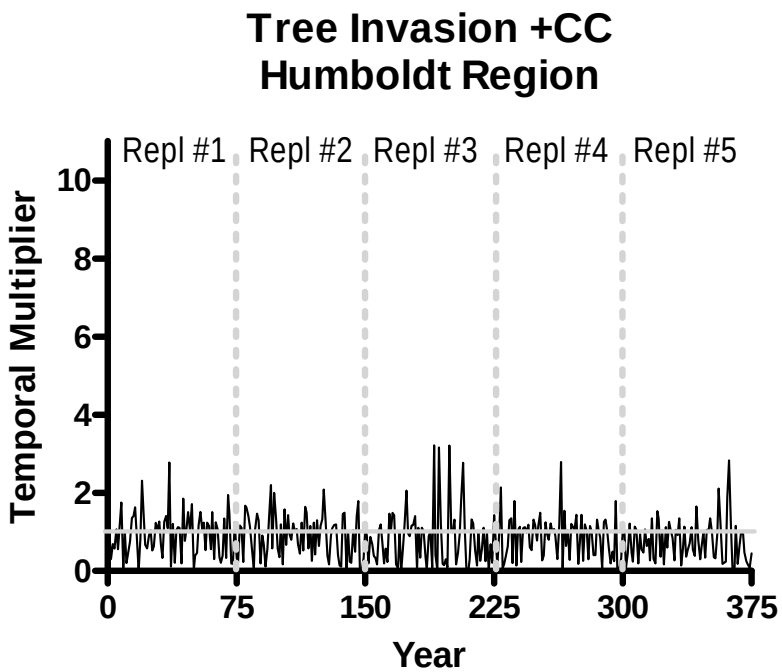

Figure 21. Annual grass invasion and tree invasion temporal multipliers with climate change effects for the Humboldt region. Five replicates (Repl) are shown each per 75-year period. Values are based on a 2,300-years time series of western juniper tree rings. The gray line for temporal multiplier = 1 represented the "no-change" or neutral parameter line.

Under the scenario of no climate change, we previously used minimum monthly temperatures that were below freezing (suggesting several consecutive days of hard freezing) to determine the frequency and strength of freezing events. For climate change, we selected the next highest temperature from the monthly values per year. If the temperature was ≤32^{0}F, then it was retained in the time series, otherwise it was set to zero. Each year's value was divided by the temporal average and this original series was resampled to create five replicates of 75 years each for the Mojave region (Figure 22). It is noteworthy that these temporal multipliers are substantially less and fewer than those in Figure 11 without climate change effects.

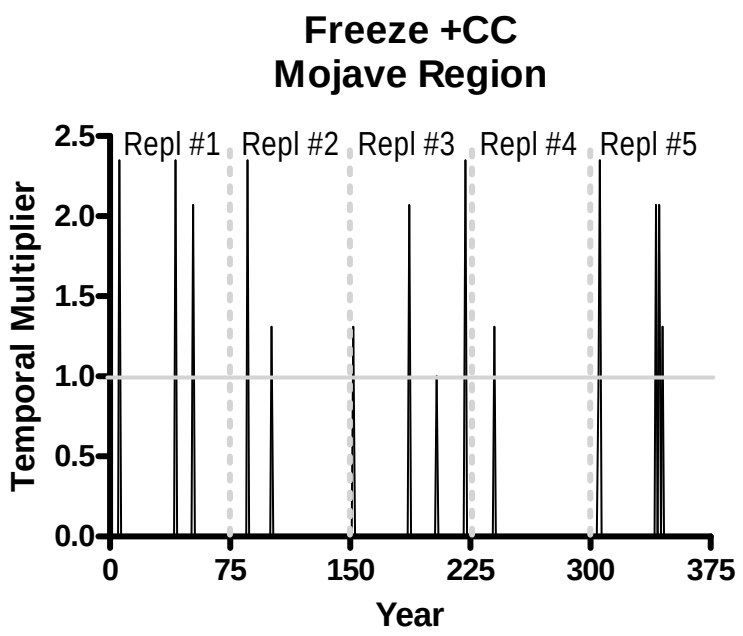

Figure 22. Freeze temporal multiplier with climate change effects for the Mojave region. Data from the Searchlight's weather station minimum temperature series. Five replicates (Repl) are shown each per 75-year period. The gray line for temporal multiplier = 1 represented the "no-change" or neutral parameter line.

The last temporal multiplier with climate change was for subalpine temperature. Previously we used the University of Arizona's tree ring width time series from 1628 to 2002. For climate change, we restricted our tree ring data from 1902 to 2002 as this phase of the record shows the strongest consistent increase in tree ring width (thus temperature by correlation) of the full 2,000+ years (Figure 10). This time series' temporal multipliers were sampled 20 times (five replicates for each of the four climatic regions of Nevada) while preserving the order of the series to maintain the pattern of tree ring growth (Figure 23; Appendix XXI for the four climatic regions).

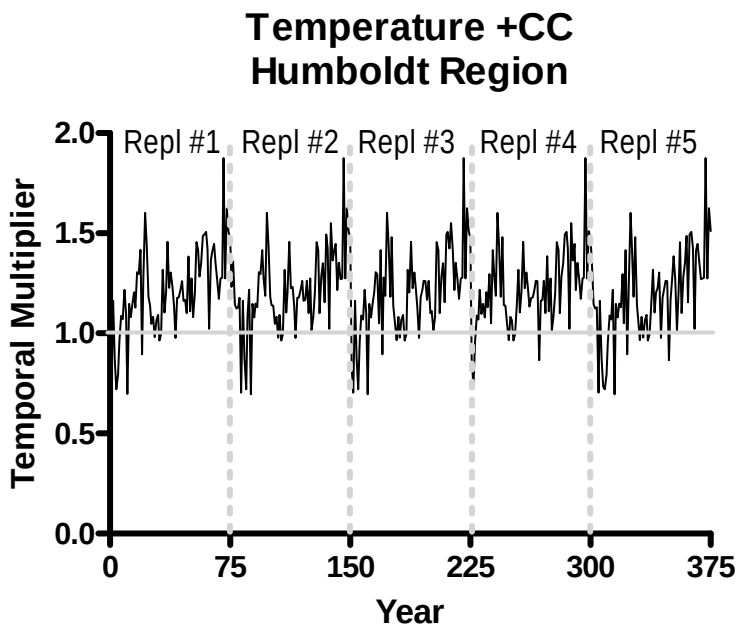

Figure 23. Temporal multiplier for subalpine temperature with climate change obtained from tree ring widths (1902 to 2002 AD) of ancient bristlecone pine from Mt. Washington in the southern Snake Range, Nevada. Data provided by Dr. Matt Salzer from the University of Arizona's Laboratory of Tree Ring Research. Five replicates (Repl) are shown each per 75-year period. The gray line for temporal multiplier = 1 represented the "no-change" or neutral parameter line.

Active Management Scenario

TNC and NDOW staff held workshops in Carson City twice, Ely, and Las Vegas to seek expert knowledge on BpS management for the Calcareous, Eastern Sierra Nevada, Elko, Lahontan, Mojave, and Walker regions. These regions represent a broad spectrum of contrasting regions in Nevada. The goal was to develop coarse and representative management strategies to abate detrimental climate change effects and order of magnitude costs for regions belonging to different ecoregions. BpSs chosen for management simulations would need to be significantly affected by climate change scenarios and either widespread in many regions or threatened in all the limited regions where it occurs. Not all regions contained all these BpSs and not all focal BpSs were simulated for active management in one region where experts were not available (for example, montane riparian in the Eastern Sierra Nevada).

RESULTS & DISCUSSION

Minimum Management

Comparisons of scenario results after 50 years revealed consistent effects by BpSs and differences among regions compared to the scenario without climate change. Climate change caused detrimental results (increased ED, HR, or loss of aspen; Table 8), no change, beneficial results (decreased ED, HR, **or** loss of aspen), and creation of BpSs previously not found in a region (Table 9). Differences between the full and half rates of range shifts were often minor (Appendices XXII and XXIII).

Detrimental effects of climate change compared to no-climate change were more widespread among regions for about 12 BpSs relative to the number of regions where they occur (Table 8): aspen-mixed conifer, aspen woodland, blackbrush mesic and thermic, curl-leaf mountain mahogany (half of regions), creosotebush-bursage, Jeffrey pine, mixed conifer, low-black sagebrush (only for HR, not ED), montane riparian (non-carbonate), montane sagebrush steppe-mountain site (≥14 inch precipitation zone), and Wyoming big sagebrush semi-desert (<12 inch precipitation zone; for HR). These BpSs were targeted for management simulations. Many other BpSs that were predicted to be in poor ecological condition in 50 years did not suffer from added detrimental climate change effects (Appendices XXII and XXIII). The primary causes of either increased ED or HR were increased area invaded by annual grasses, exotic riparian forbs and trees, and loss of aspen.

Among detrimental results, some BpSs suffered relatively large net losses. Net losses occur when more of a BpS's "pixels" are converted to other BpSs than pixels from other BpSs being converted to the focal BpS. The Alpine BpS, which was too small to estimate meaningful ED and HR values, was only detected in the Elko region by LANDFIRE (although this BpS is truly found in other regions but classified as barren by LANDFIRE). Both climate change scenarios caused the disappearance of the Alpine BpS (Appendix XXII, Table XXII-10). The Mountain Shrub and Montane Riparian (non-carbonate) BpSs similarly vanished from the Mojave Desert region with climate change scenarios, although they persisted elsewhere (Table 8; Appendix XXII, Tables XXII-6 and XXII-7). Significant aspen loss was found for the Aspen-Mixed Conifer BpS in the Calcareous, Clover-Delamar, and Eastern Sierra Nevada regions, and in the Aspen Woodland BpS in the Toiyabe region (Table 8).

Loss of a BpS in a region has two main causes: 1) the BPS was too small such that a few decades of incremental range shifts will extirpate it (for example, Alpine BpS) and 2) the region experienced more stand replacing events than other regions due to predicted local drought and wet year sequences (temporal multipliers), both of which determine future replacement fire regimes and mortality-related disturbances. Greater stand replacing activity accelerates rates of range shifts.

The counterpart to the loss of acres from range shifts is the conversion of acres to another recipient BpS, and even the creation of BpSs not previously found in a region. Three BpSs were especially prone to being created in regions where previously absent: Big Sagebrush Steppe, Creosotebush-White Bursage, and Washes. The second and third BpSs are the most indicative, respectively, of the Mojave Desert vegetation moving north into the southern Great Basin ecoregion and disappearance of perennial water in montane streams found on non-carbonate geology.

Counter-intuitive results were encountered. It was not unusual for a BpS to show decreased ED (Table 9

) but increased HR (Table 8). ED might decrease because simulations introduce, for examples, larger amounts of fire activity in fire-suppressed BpSs and flood events in traditionally regulated rivers. Such activity would cause ED to decrease because reference vegetation classes are "rebalanced;" however, annual grass invasion and exotic riparian forb and tree invasion, often exacerbated by fire and CO_2 enrichment, and tree invasions into shrublands, also exacerbated by CO_2 enrichment, would simultaneously cause the remaining uncharacteristic classes with non-native species or encroaching trees to become dominant relative to the total amount of uncharacteristic classes and HR to increase (Low et al. 2010). Examples of this type are found for the Low-Black Sagebrush BpS in the Clover-Delamar and Owyhee regions, and Mountain Shrub BpS in the Clover-Delamar region, and Wyoming Big Sagebrush BpS in the Tonopah region (Table 8 and Table 9).

Another counter-intuitive result would be the disproportional reduction of uncharacteristic classes caused by range shifts in classes of vegetation that "cycle" faster, such as annual grasslands and early shrubs. These uncharacteristic classes "escape" to other BpSs and remain uncharacteristic (i.e., "passing on the problem to another BpS), while incoming classes to the focal BpS usually enter by the early-succession class (A class) (cooler BpSs often have less uncharacteristic classes that warmer ones).

Climate change had no significant effects or decreased ED or HR for a large number of BpSs: big sagebrush upland sites (12 to 14 inch precipitation zone); chaparral, curl-leaf mountain mahogany (half the regions), greasewood, limber-bristlecone pine, mixed salt desert, pinyon-juniper woodland, washes, Wyoming big sagebrush semi-desert (for ED) (Table 9)

Regions were not equal in the distribution of results. The Mojave Desert, Elko, and Calcareous regions showed the greatest number of BpS (respectively, 15, 13, and 10 BpS of 32) with increased ED, HR, or loss of aspen clones (Table 8). The least affected regions with only three BpSs impacted were the Lahontan and Walker—these regions also contained less BpSs than others. It is noteworthy that the warmest and coldest regions were the most susceptible to climate change influences. The Calcareous region is somewhat unusual because it essentially ranges between limits of the Mojave Desert and Columbia Plateau ecoregions and harbors some of the highest elevations in Nevada; therefore a high gradient of BpSs are positioned to experience climate change.

The regions containing the greatest number of BpSs with non-significant or beneficial effects were the Clover-Delamar (17), Tonopah (15), Calcareous (13) and Lahontan (13) regions, whereas the regions with the smallest numbers of BpSs with non-significant or beneficial results were the Elko (8) and Owyhee (8) regions (Table 9

). The significance of these results was less clear than for detrimental changes because confounded causes can explain results. For example, the absence of response to climate change could indicate that the BpS was already very degraded (high ED) or the BpS was very large and can buffer negative effects.

Table 8. Overview of significant increases in ecological departure (ED), high-risk classes (HR), or aspen clone loss (AL) for all BpSs and regions due to climate change effects. All colored entries indicate an effect of climate change among the scenarios "no climate-change", "half climate change", and "full climate change." Legend: ↑ED= significant increase in ecological departure compared to natural range of variability ; AL = significant loss of aspen; ↑HR = significant increase in high risk classes; ~ED= borderline significant effect on ED.

	Regions												
BP	Black Rock	Calcareous	Clover-Delamar	Eastern Sierra Nevada	Elko	Eureka	Humboldt	Lahontan	Mojave	Owyhee	Toiyabe	Tonopah	Walker
Aspen-Mixed Conifer	↑ED	AL/~↑ED	AL	AL	↑ED/AL				↑HR				
Aspen Woodland	↑ED /AL	~↑ED			↑ED/AL	↑ED	↑ED	↑ED	↑HR	↑HR	AL /~↑ED	↑HR	
Big Sagebrush Steppe						create d↑HR					created ↑HR		
Big Sagebrush upland												↑HR	↑HR
Blackbrush-mesic									↑ED				
Blackbrush-thermic			↑HR						~↑ED/ ↑HR				
Chaparral													
Creosotebush-Bursage									↑ED				
Curl-leaf Mountain Mahogany	↑ED			↑ED	↑ED		↑HR				↑ED		
Greasewood									↑ED		↑HR /~~↑ED		
High Elevation Meadow													
Jeffrey Pine				↑ED									
Juniper Savanna													
Limber-Bristlecone Pine					~↑ED				↑ED				
Low-Black		↑HR	↑HR			↑ED	↑HR			↑HR	~↑ED/↑	↑ED	↑HR

Sagebrush											HR		
Low Sagebrush Steppe	↑ED	~↑ED		↑ED						↑ED			
Low-Elevation Grassland													
Mixed Conifer	↑ED	~↑ED		↑ED	~↑ED				↑ED				
Mixed Salt Desert					↑HR						↑HR		
Montane Riparian	↑ED	↑ED	↑HR	↑ED	↑ED	↑ED	↑ED	↑ED	vanish	↑ED	↑ED	↑ED	↑ED
Montane Riparian Carbonate									~↑ED				
Montane Sagebrush Steppe mountain	↑ED	~~↑ED	↑HR	↑ED	↑ED	↑ED	↑ED	↑ED	↑HR	↑ED	~↑ED	↑ED	
Mountain Shrub	↑ED	↑HR	↑HR		↑HR		~↑HR		vanish	↑HR			
Paloverde-Mixed Cacti									↑ED				
Pinyon-Juniper		↑ED	↑ED		~↑ED				↑HR		↑ED	↑ED	
Ponderosa Pine			~~↑ED						↑ED				
Semi-Desert Grassland													
Spruce-Fir					~~↑ED								
Subalpine Riparian					↑HR /~~↑ED					↑ED			
Warm Desert Riparian													
Washes			~~↑ED										
Wyoming Big Sagebrush		↑HR			↑HR /~~↑ED	↑ED	↑HR			↑ED		↑HR	

Table 9. Overview of significant decreases in ecological departure (ED), high-risk classes (HR), or aspen clone loss (AL) for all BpSs and regions due to climate change effects. All colored entries indicate an effect of climate change among the scenarios "no climate-change", "half climate change", and "full climate change." Legend: no = no effect of climate change; ↓ED = significant ecological departure decrease (i.e., more like reference condition); created = system not present in NO CC scenario, but present with CC due to range shifts.

	Regions												
Climate change effects	Black Rock	Calcareous	Clover-Delamar	Eastern Sierra Nevada	Elko	Eureka	Humboldt	Lahontan	Mojave	Owyhee	Toiyabe	Tonopah	Walker
Aspen-Mixed Conifer									no				
Aspen Woodland				no					no	↓ED		no	
Big Sagebrush Steppe	↓ED	created		created	↓ED	created	created	created		no	created	created	created
Big Sagebrush upland	↓ED	↓ED	↓ED	no	↓ED	↓ED	↓ED	↓ED		no	↓ED	no	no
Blackbrush-mesic			↓ED									↓ED	
Blackbrush-thermic			↓ED									created	
Chaparral			↓ED	no				no	↓ED			no	
Creosotebush-Bursage		created	no					created			created	created/ ↓ED	created
Curl-leaf Mountain Mahogany		no	no			no	no	no	↓ED			no	
Greasewood	↓ED	no	↓ED	no	no	no	no	no		↓ED		no	no
High Elevation Meadow	No												
Jeffrey Pine													
Juniper Savanna		no			no				no				
Limber-Bristlecone Pine	No	no				↓ED	no	no			no	created	
Low-Black Sagebrush	No	no	↓ED	no	↓ED		↓ED	no	no	↓ED			no

Low Sagebrush Steppe			↓ED		no								
Low-Elevation Grassland	No												
Mixed Conifer			no			no	no	↓ED			no	no	
Mixed Salt Desert	↓ED	↓ED	↓ED	↓ED	no	↓ED	↓ED	↓ED		↓ED	no	no	no
Montane Riparian			↓ED										
Montane Riparian Carbonate			no										
Montane Sagebrush Steppe mountain			↓ED						no				no
Mountain Shrub		no	↓ED		no					no			
Paloverde-Mixed Cacti													
Pinyon-Juniper	↓ED			↓ED		↓ED	↓ED	↓ED	↓ED	no			no
Ponderosa Pine													
Semi-Desert Grassland											created	↓ED	
Spruce-Fir	No	no											
Subalpine Riparian	No	no									no		
Warm Desert Riparian			no										
Washes						created/ ↓ED	created	created/ ↓ED	no		created	no	created
Wyoming Big Sagebrush	↓ED	no	↓ED	↓ED			no	↓ED			↓ED	↓ED	↓ED

Active Management Scenario

BpSs chosen for management simulations were: aspen-mixed conifer, aspen woodland, blackbrush mesic and thermic, creosotebush-bursage, Jeffrey pine, mixed conifer, low-black sagebrush, montane riparian (non-carbonate), montane sagebrush steppe-mountain site, and Wyoming big sagebrush semi-desert. Not all regions contained all these BpSs and not all focal BpSs were simulated for active management in one region where experts were not available (for example, montane riparian in the Eastern Sierra Nevada). Results are shown by habitat types.

Mojave Mid-Elevation Mixed Desert Scrub Habitat

A first step requested by partners prior to simulating management was to update the initial conditions of both Blackbrush BpSs. LANDFIRE and NNHP's geodata reflect primarily levels of exotic species interpreted from imagery captured before 2005. Since the abundant precipitation of 2005, most communities of the Mojave Desert have shown to be dominated by exotic grasses and forbs. We used initial conditions that reflect recent high-resolution remote sensing from the Spring Mountains completed in 2008 (Provencher et al. 2008). Essentially, >90% of the BpSs are in the Shrub-Annual-Grass-Perennial-Grass class.

Both Blackbrush BpSs received the same three treatments that shared the use of an herbicide suppressing the germination of annual species (Plateau®). The herbicide is 40-60% successful, but success changes from the first to the second year after application (Dr. Leslie DeFalco, USGS Henderson, NV, personal communication); therefore, we chose 50%. Herbicide alone was applied to the Shrub-Annual-Grass-Perennial-Grass class to recover late-succession blackbrush. Recovery of the Annual Grass class is the greatest challenge because the success rate of native seedings is currently very low (1%). Because of active research on developing new plant material and species combinations (Abella et al. 2011), we proposed "hypothetical" restoration treatments that assumed continuation of the current level of success (1%) for the first 20 years, then, following a 20-year period of research, a 10% success rate for the remaining 30 years of the simulation. The newer success rate was dependent on one important assumption that made a great difference: livestock grazing had to be retired from the new seeded areas, otherwise the seeding failed because of herbivory on young plants.

50-YEAR PREFERRED MANAGEMENT Strategies and Costs

Strategy	Rate (acres/yr)	Years of Application	Cost ($/acre)
Spray herbicide to control exotic annuals in blackbrush with an understory of exotic annuals	15,000	50	25
Spray herbicide to control exotic annuals and seed native species (current seed mix) in annual grassland	10,000	1st 20	100
Spray herbicide to control exotic annuals and seed native species (new seed mix) in annual grassland	15,000	last 30	150
Retire livestock grazing in areas seeded with native seed		50	

The average annual cost of these treatments was, respectively, $1,530,943 and $1,228,790 for a total of $76,547,162 in mesic blackbrush and $61,439,475 in thermic blackbrush over 50 years.

50-YEAR OUTCOME

Management actions reduced ED by 40% in mesic blackbrush (Figure 24) and by 11% in thermic blackbrush (Figure 25). There was no overlap in confidence intervals between means. Reduction of ED in thermic blackbrush was more difficult than in mesic blackbrush because succession is much slower at the lower elevations in the former BpS.

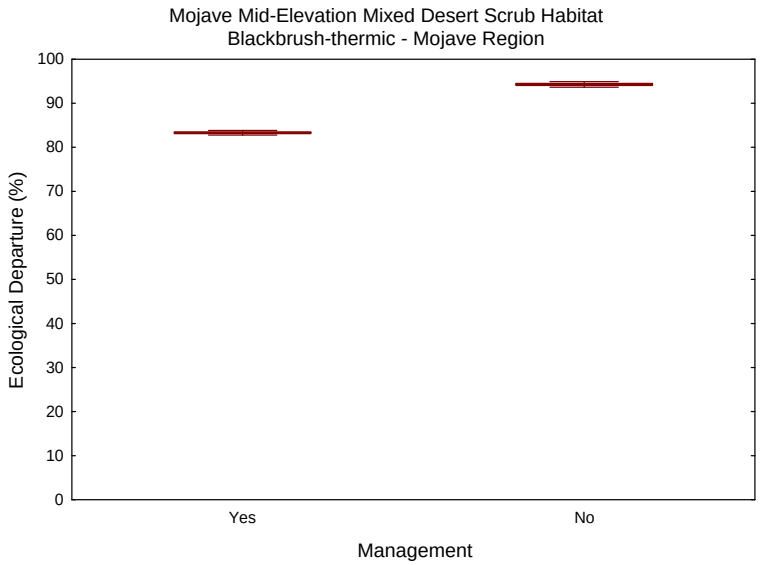

Figure 24. ED for mesic blackbrush simulated with climate change, and with and without management actions in the Mojave region. For this BpS, ED and HR are mathematically equal. Box plot: mean, 1 ± Ste, 1 ± 95% CI, extreme outlier (star). N = 5 replicates.

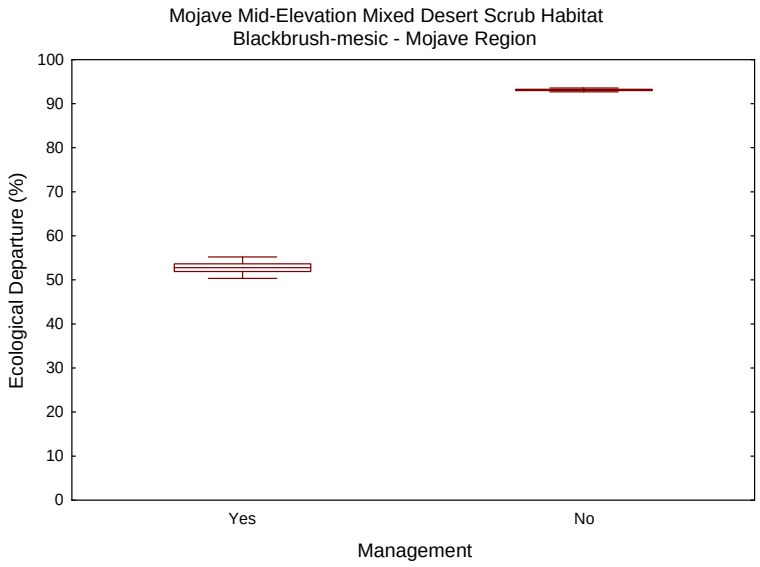

Figure 25. ED for thermic blackbrush simulated with climate change, and with and without management actions in the Mojave region. For this BpS, ED and HR are mathematically equal. Box plot: mean, 1 ± Ste, 1 ± 95% CI, extreme outlier (star). N = 5 replicates.

Mojave/Sonoran Scrub Habitat

The challenge described for restoration of blackbrush is equally true for the Creosotebush-White Bursage BpS. Restoration solutions are also similar, although the BpS is more productive because it occupies deeper and loamier soils than blackbrush. However, this latter BpS is more extensive; therefore, implementation rates were also more extensive.

50-YEAR PREFERRED MANAGEMENT Strategies and Costs

Strategy	Rate (acres/yr)	Years of Application	Cost ($/acre)
Spray herbicide to control exotic annuals in blackbrush with an understory of exotic annuals	37,000	50	25
Spray herbicide to control exotic annuals and seed native species (current seed mix) in annual grassland	5,500	1st 20	100
Spray herbicide to control exotic annuals and seed native species (new seed mix) in annual grassland	37,000	last 30	150
Retire livestock grazing in areas seeded with native seed		50	

The average annual cost of these treatments was $1,535,558 for a total of $76,777,892 in creosotebush-white bursage over 50 years.

50-YEAR OUTCOME

Management actions reduced ED by 32% for creosotebush-white bursage (Figure 26). There was no overlap in confidence intervals.

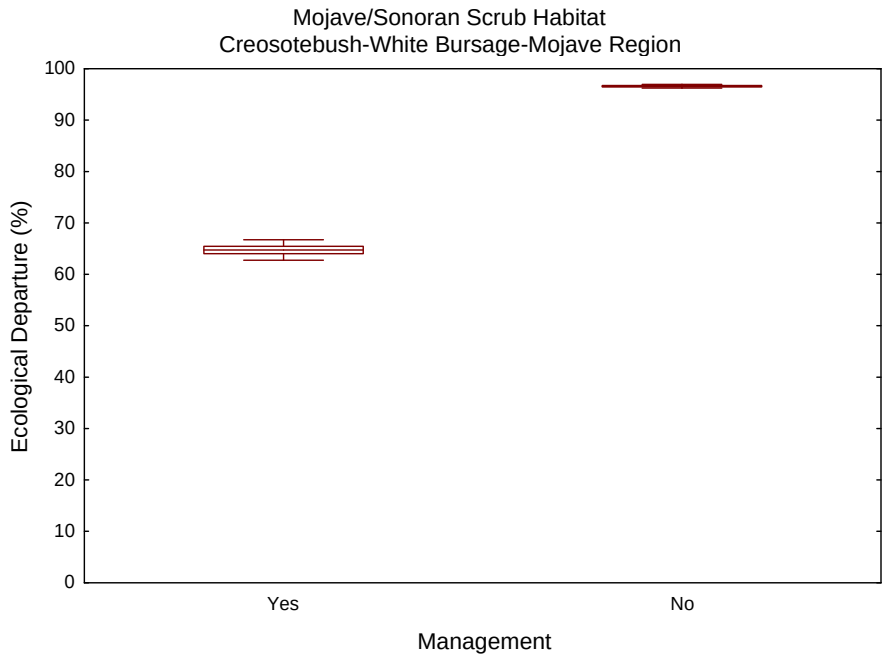

Figure 26. ED for creosotebush-white bursage simulated with climate change, and with and without management actions in the Mojave region. For this BpS, ED and HR are mathematically equal. Box plot: mean, 1 ± Ste, 1 ± 95% CI, extreme outlier (star). N = 5 replicates.

Lower Montane Woodland Habitat

Mountain shrub was the only BpS receiving managed simulations in this habitat. Management was required in the Mojave, Calcareous, and Elko regions. Fire was involved in all because mountain shrubs typically resprout after fire and the productivity of the BpS favors herbaceous growth. Differences among regions reflect the need to reduce older class of vegetation (Calcareous and Elko) or tree encroachment (Mojave), and cheatgrass (Calcareous).

50-YEAR PREFERRED MANAGEMENT Strategies and Costs

Strategy	Rate (acres/yr)	Years of Application	Cost ($/acre)
Mojave			
Prescribed burning and native seeding in tree-encroached shrubland (TE)	11,789	1st 5	150
Calcareous			
Prescribed burning in third oldest reference class (C)	150	50	50
Herbicide to control annuals in Shrub-Annual-Grass-Perennial-Grass class (SAP)	40	50	100
Elko			
Prescribed burning in two older reference classes (C and D)	500	1st 10	50

The average annual costs of these treatments in mountain shrub were for:

- Mojave region; $1,747,877 for 5 years for a total of $8,739,386 over 50 years
- Calcareous region; $11,686 for a total of $584,298 over 50 years
- Elko region; $25,276 for 10 years for a total of $252,759 over 50 years.

50-YEAR OUTCOME

Management actions led to dramatic results. In the Mojave region, the Mountain Shrub BpS vanished due to climate change conversions, whereas the BpS "survived", but shrunk, with management achieving ED of 40% and HR of 16%.

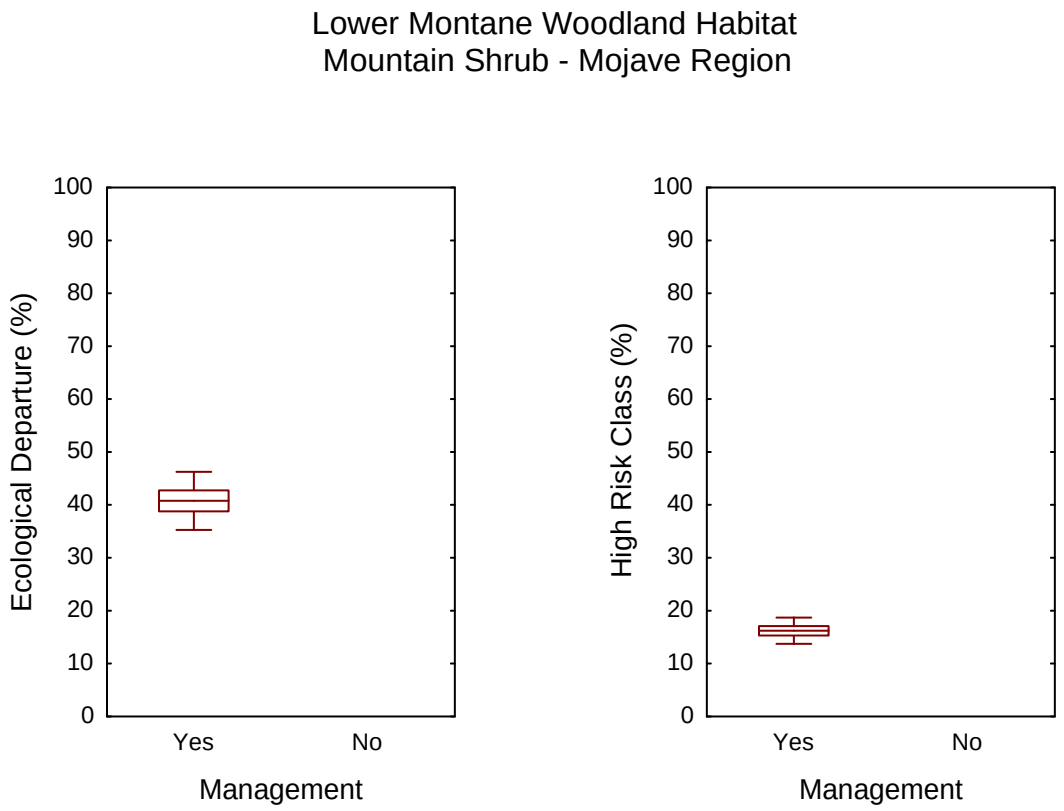

Figure 27. ED and HR for mountain shrub simulated with climate change, and with and without management actions in the Mojave region. Box plot: mean, 1 ± Ste, 1 ± 95% CI, extreme outlier (star). N = 5 replicates. The absence of values for NO management represents the loss of the BpS to climate change.

Climate change did not cause mountain shrub to vanish from the Calcareous (Figure 28) or Elko (Figure 29) regions, but shrinkage did occur. In the Calcareous region, management actions targeting two different sources of departure reduced ED and HR, respectively, by 32% and 34%, which is substantial given the low investment described above.

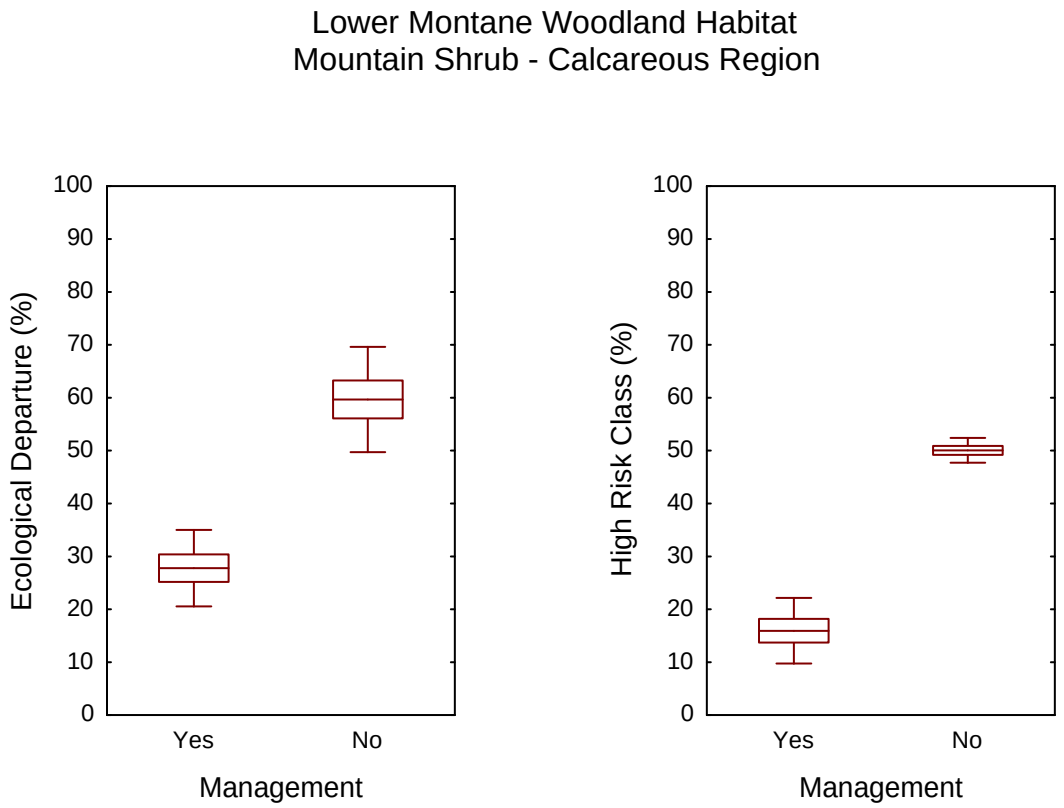

Figure 28. ED and HR for mountain shrub simulated with climate change, and with and without management actions in the Calcareous region. Box plot: mean, 1 ± Ste, 1 ± 95% CI, extreme outlier (star). N = 5 replicates.

In the Elko region, a different outcome emerged from using only prescribed fire. ED decreased by 15%, however HR increased by 3%, a non-significant difference as shown by overlapping confidence intervals (Figure 29). Management in Elko only focused on rebalancing reference classes, while neglecting on-going cheatgrass invasion and tree encroachment into shrublands. In retrospect, the choice of management level was the least expensive of the three regions. However, the Mountain Shrub BpS remained moderately departed not reaching ED values less than 50+%. In other words, the BpS was not restored.

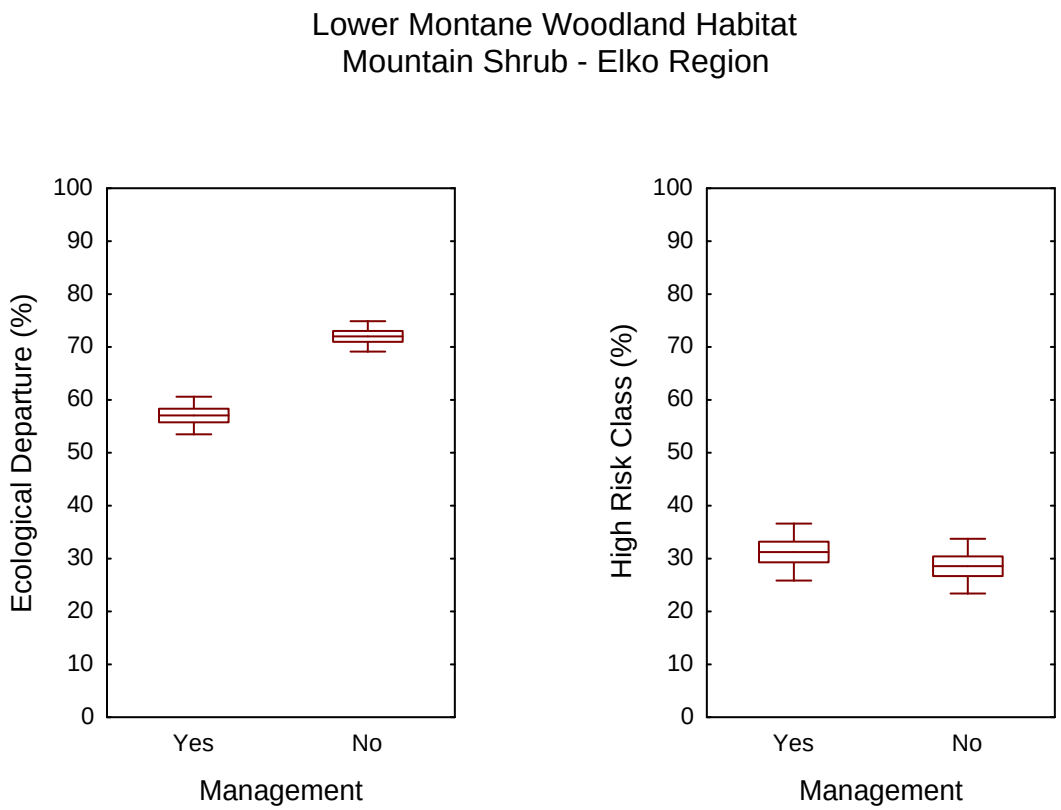

Figure 29. ED and HR for mountain shrub simulated with climate change, and with and without management actions in the Elko region. Box plot: mean, 1 ± Ste, 1 ± 95% CI, extreme outlier (star). N = 5 replicates.

Intermountain Rivers & Streams Habitat

The Montane Riparian BpS is widespread in Nevada. The two dominant problems with this BpS are invasion of exotic forbs (for examples, tall whitetop and thistles) and entrenchment of rivers and streams. Depending on the width of waterways, solutions can be simple in streams and fairly complex in larger rivers. Due to the coarse resolution of this assessment, we strived for simple management actions: weed inventories and weed control, and, for the calcareous region, an attempt to abate entrenchment with low technology rock riffles placed in streams. For the Lahontan and Walker regions the infestation of exotic forbs is already so widespread as to render inventories unhelpful; therefore, the solution was to proceed directly with exotic species control.

50-YEAR PREFERRED MANAGEMENT Strategies and Costs

Strategy	Rate (acres/yr)	Years of Application	Cost ($/acre)
Calcareous			
Weed inventory all classes	500	50	50
Exotic species control	125	50	260
Fill entrenched reaches with rock riffles	250	1st 5	100
Elko			
Weed inventory all classes	3,000	50	50
Exotic species control	1,000	50	350
Lahontan			
Exotic species control (respectively)	3,400/100	1st 20/30	40/50
Mojave			
Weed inventory all classes	1,000	50	50
Exotic species control	80	50	250
Walker			
Exotic species control (respectively)	400/100	1st 20/30	40

The average annual costs of these treatments in montane riparian were for:

- Calcareous region; $48,929 for a total of $2,446,431 over 50 years
- Elko region; $482,166 for a total of $24,108,335 over 50 years
- Lahontan region; $52,815 for a total of $2,640,761 over 50 years
- Mojave region; $48,581 for a total of $2,429,056 over 50 years
- Walker region; $4,175 for a total of $208,731 over 50 years.

50-YEAR OUTCOME

Benefits of management actions were similar in all regions; reductions of ED and HR were between 27% and 8% and nowhere did restoration accomplish low ED or HR (Figures 30-34). In the best case, final ED > 60%, which is moderately departed (Figure 34). Without management, the riparian habitat was completely converted to other BPSs in the Mojave region; however, implementation of management actions slowed down the loss of riparian habitat in the Mojave region while achieving ED of about 65%. All riparian habitat on non-carbonate geology shrank in every region, although more so in the warmer regions. Conversely, riparian habitat on carbonate geology was not allowed to shrink as an assumption of the models described in the Methods section.

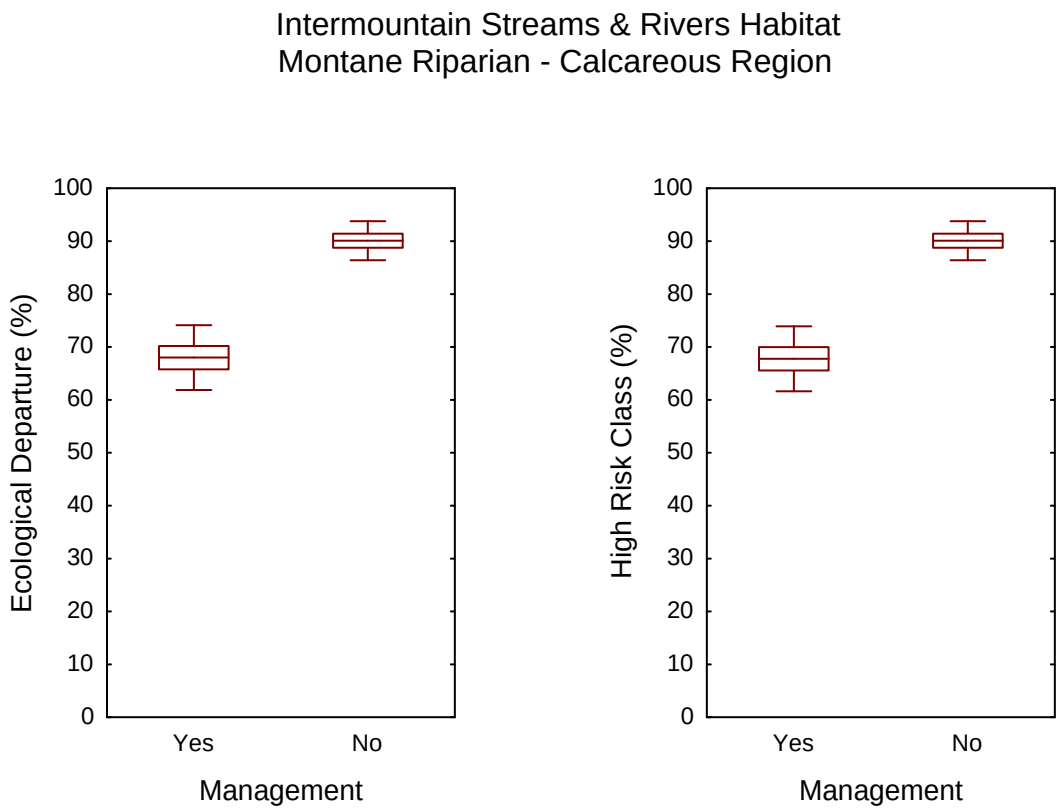

Figure 30. ED and HR for mountain riparian simulated with climate change, and with and without management actions in the Calcareous region. Box plot: mean, 1 ± Ste, 1 ± 95% CI, extreme outlier (star). N = 5 replicates.

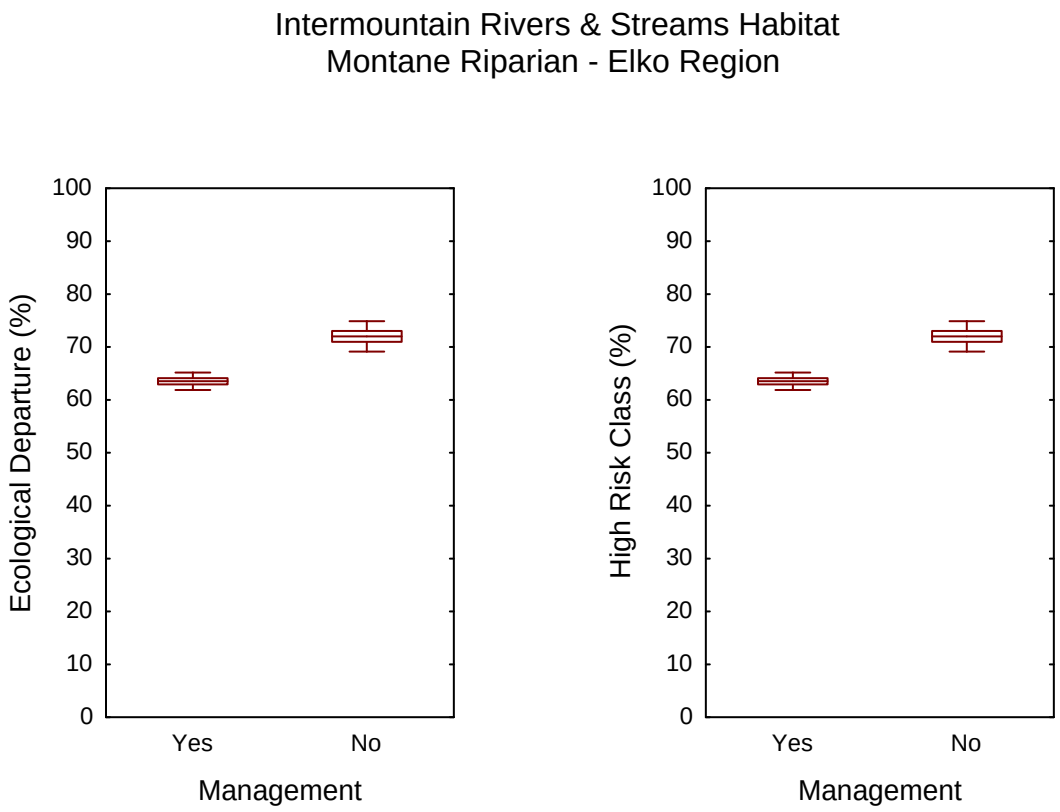

Figure 31. ED and HR for mountain riparian simulated with climate change, and with and without management actions in the Elko region. Box plot: mean, 1 ± Ste, 1 ± 95% CI, extreme outlier (star). N = 5 replicates.

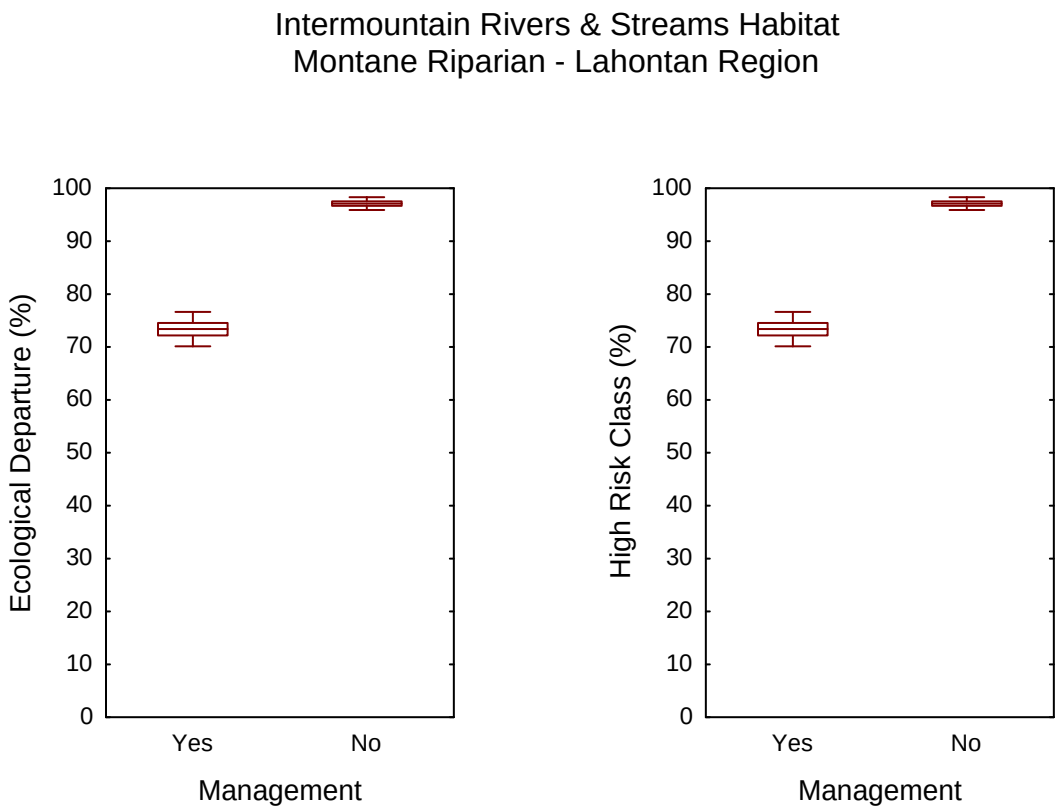

Figure 32. ED and HR for mountain riparian simulated with climate change, and with and without management actions in the Lahontan region. Box plot: mean, 1 ± Ste, 1 ± 95% CI, extreme outlier (star). N = 5 replicates.

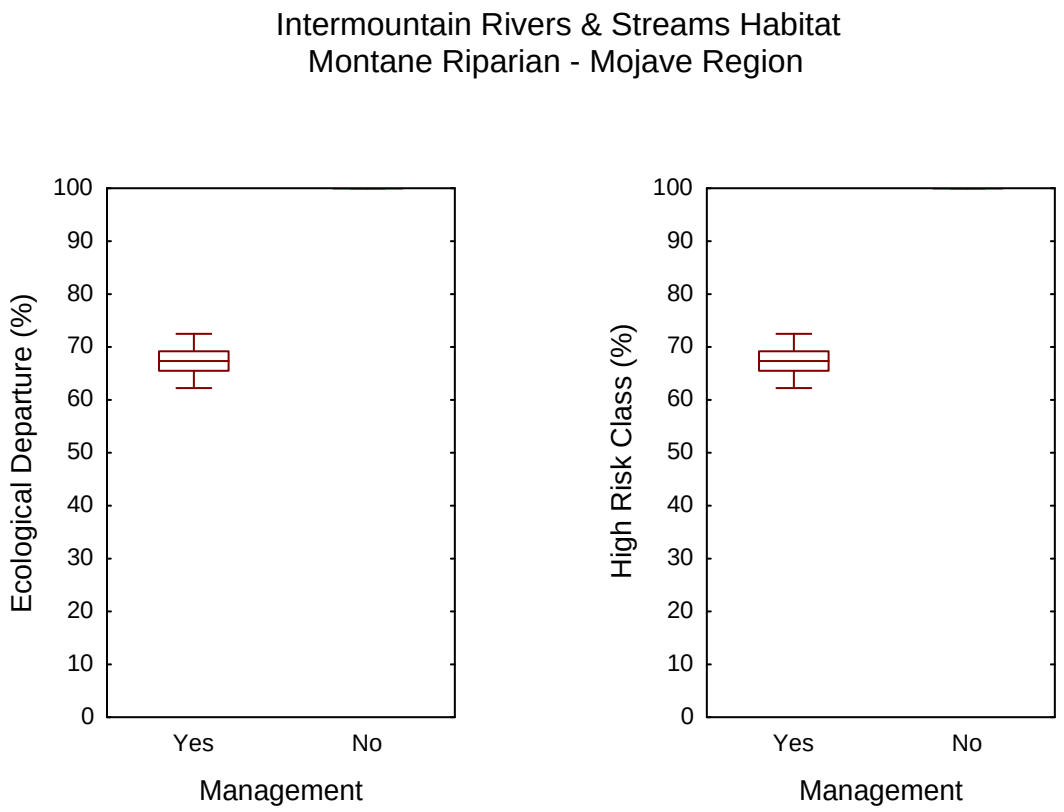

Figure 33. ED and HR for mountain riparian simulated with climate change, and with and without management actions in the Mojave region. The absence of data for "No" management represents complete conversion of the BpS due to climate change. Box plot: mean, 1 ± Ste, 1 ± 95% CI, extreme outlier (star). N = 5 replicates.

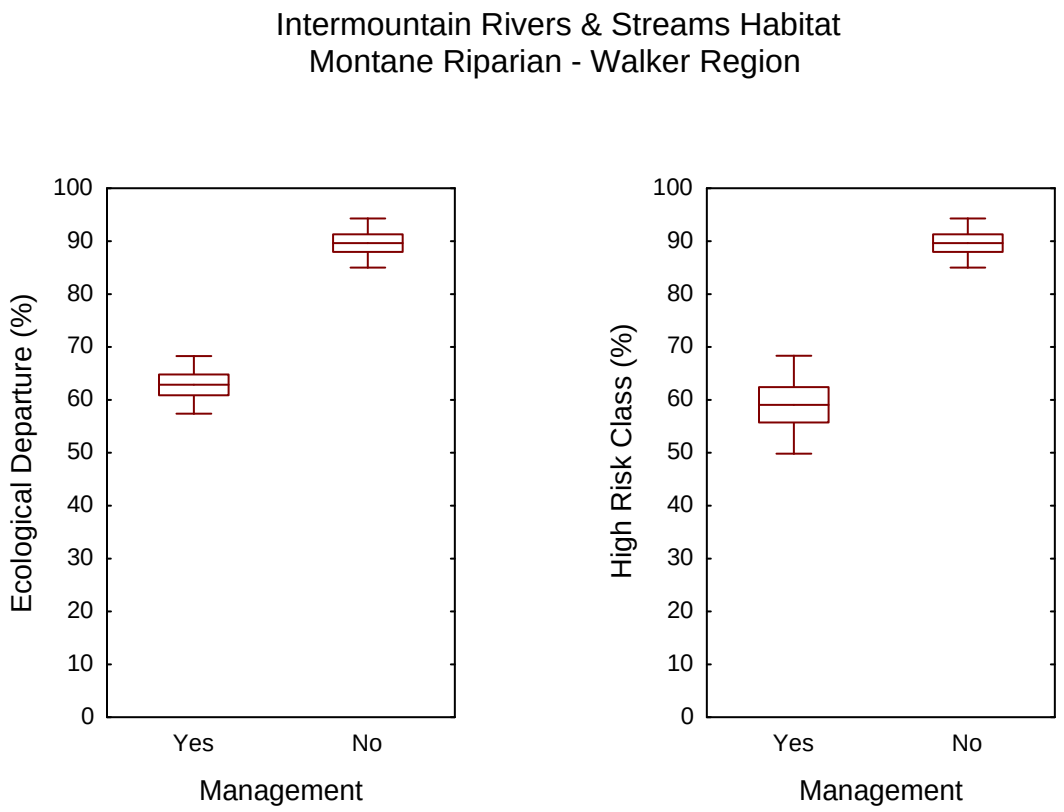

Figure 34. ED and HR for mountain riparian simulated with climate change, and with and without management actions in the Walker region. Box plot: mean, 1 ± Ste, 1 ± 95% CI, extreme outlier (star). N = 5 replicates.

Sagebrush Habitat

Four BpSs were included in the sagebrush habitat: Wyoming Big Sagebrush, Big Sagebrush-upland, Low-Black Sagebrush, and Montane Sagebrush Steppe-mountain. All BpS are used by Greater Sage-grouse. Results are presented by BpS.

WYOMING BIG SAGEBRUSH

The Wyoming Big Sagebrush BpS is difficult to restore because the success of any seeding is low at semi-desert elevations (about 50% successful without livestock grazing), unless introduced crop species such as crested wheatgrass are used. During simulations with partners, it became clear that large areas of this BpS are very expensive to restore and restoration would accomplish meager ecological returns. The two regions where management simulations were conducted reflect very different approaches to restoration. The Calcareous region is mostly dominated by black sagebrush communities with Wyoming big sagebrush communities found in shallow valleys or at the toe of non-carbonate mountain ranges;

therefore, management in semi-desert Wyoming big sagebrush is often conducted for small wildlife projects where the primary goal is to remove trees. In contrast, the Wyoming Big Sagebrush BpS is the dominant matrix community in the Elko region; therefore, restoration is at large scale.

50-YEAR PREFERRED MANAGEMENT Strategies and Costs

Strategy	Rate (acres/yr)	Years of Application	Cost ($/acre)
Calcareous			
Chainsaw lopping of pinyon and juniper in the tree-encroached and cheatgrass invaded class (TA) for wildlife value	450	50	50
Elko			
Mechanically thin dense sagebrush cover, spray herbicide to control cheatgrass, and seed native species in the Shrub-Annual-Grass class	3,000	1st 20	130

The average annual costs of these treatments in Wyoming big sagebrush were for:

- Calcareous region; $22,038 for a total of $1,101,910 over 50 years
- Elko region; $154,104 for a total of $7,705,206 over 50 years.

50-YEAR OUTCOME

Results of managing the Wyoming Big Sagebrush BpS were modest. The small wildlife projects simulated in the Calcareous region were not designed to change ED or HR; indeed, no change in ED and HR were observed (Figure 35). Management actions actually increased the area of Annual Grass and Shrub-Annual-Grass classes because of the built-in failure rates. In the Elko region, management actions had no effect on ED (Figure 36), however HR was reduced by 15% because uncharacteristic classes were partly converted to the Seeded class, which is not considered in HR. Management actions targeted uncharacteristic classes, not reference classes.

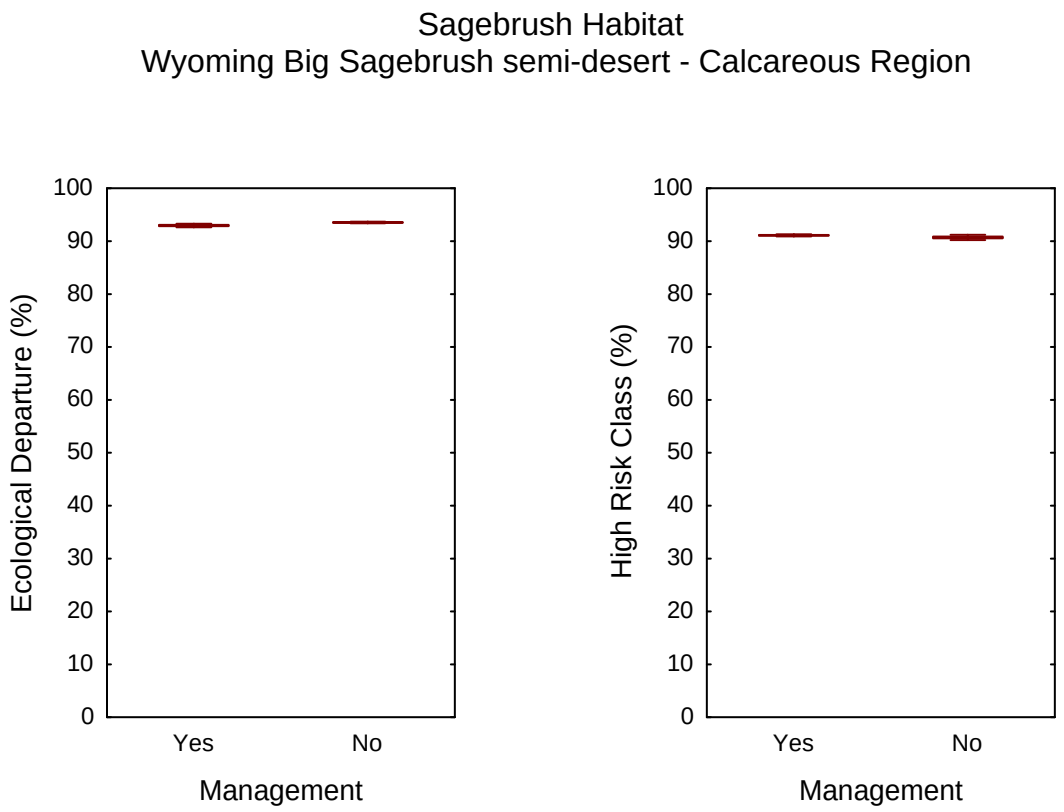

Figure 35. ED and HR for Wyoming big sagebrush simulated with climate change, and with and without management actions in the Calcareous region. Box plot: mean, 1 ± Ste, 1 ± 95% CI, extreme outlier (star). N = 5 replicates.

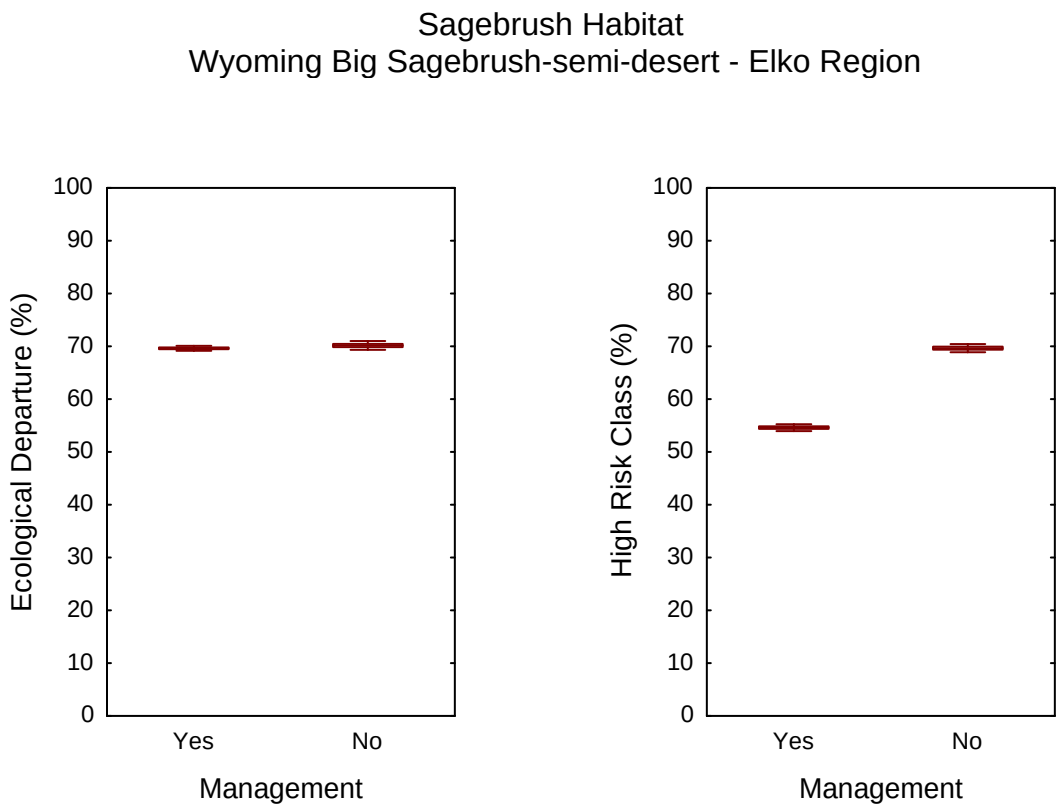

Figure 36. ED and HR for Wyoming big sagebrush simulated with climate change, and with and without management actions in the Elko region. Box plot: mean, 1 ± Ste, 1 ± 95% CI, extreme outlier (star). N = 5 replicates.

BIG SAGEBRUSH-UPLAND

The Big Sagebrush-upland BpS represents most people's idea of the traditional mountain big sagebrush communities; however, this BpS also includes the upland soils of Wyoming big sagebrush communities and their hybrid zone. The BpS is fairly productive, but experiences high levels of invasion of cheatgrass and encroachment of pinyon and juniper into open shrublands. Moreover, decades of management have homogenized the BpS towards late-succession class dominance and past livestock practices have often depleted the understory of its herbaceous layer. Although the BpS probably deserves restoration in all regions of Nevada, the added effect of climate change was only detected in the Walker region where late-succession classes with pinyon-juniper were over-represented. Mechanical methods of tree removal were simulated as partners expressed local agency resistance to the use of prescribed fire.

50-YEAR PREFERRED MANAGEMENT Strategies and Costs

Strategy	Rate (acres/yr)	Years of Application	Cost ($/acre)
Walker			
Mastication of late-succession class (E)	275	50	700

The average annual cost of this treatment in big sagebrush-upland was for:

- Walker region; $9,838,182 for a total of $196,763 over 50 years.

50-YEAR OUTCOME

Mastication of trees reduced ecological departure by 16% and high risk classes by 14% (Figure 37). Mastication caused the early and mid-succession classes to increase and prevented the late-succession class from converting to the Tree-Encroached class.

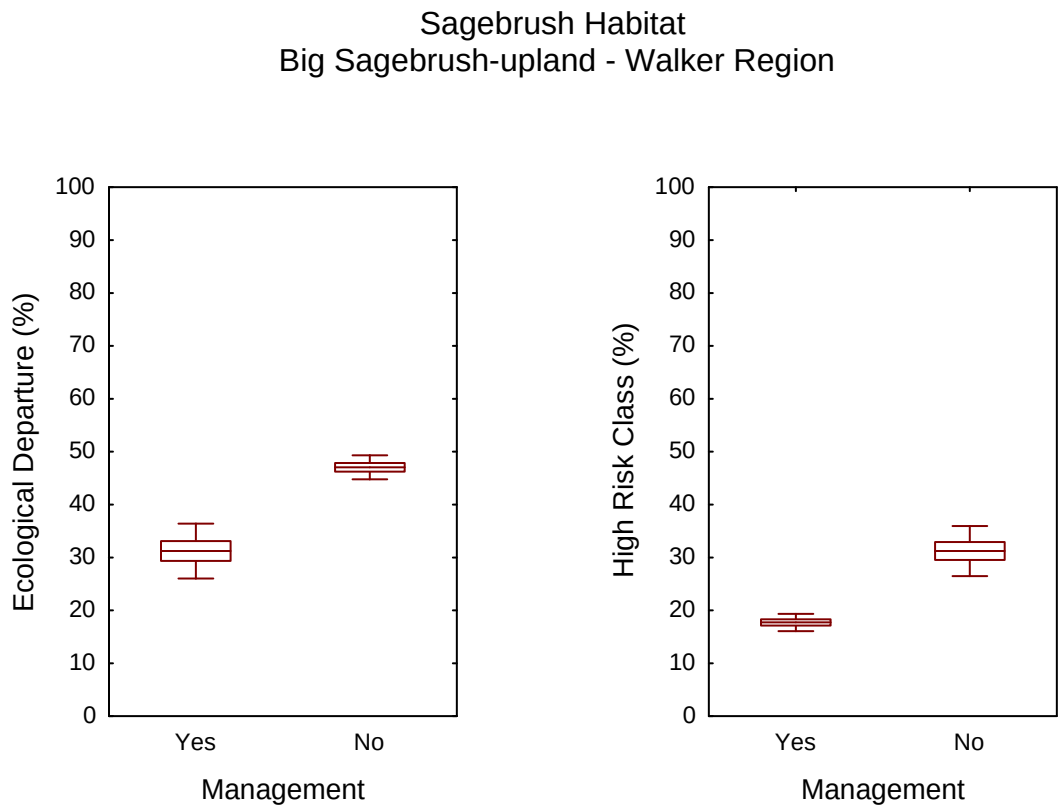

Figure 37. ED and HR for big sagebrush-upland simulated with climate change, and with and without management actions in the Elko region. Box plot: mean, 1 ± Ste, 1 ± 95% CI, extreme outlier (star). N = 5 replicates.

LOW/BLACK SAGEBRUSH

Low and black sagebrush are found on harsh soils with shallow root restricting layers. Cheatgrass invasion is usually low to moderate. Pinyon and juniper invasion also occurs slowly, although more rapidly and completely in black sagebrush communities. Given the importance of both low and black sagebrush to Greater Sage-grouse diet and the intolerance of grouse for trees, restoration was focused on tree removal in the Tree-Encroached class.

50-YEAR PREFERRED MANAGEMENT Strategies and Costs

Strategy	Rate (acres/yr)	Years of Application	Cost ($/acre)
Calcareous			
Chaining and native seeding in Tree-Encroached class	9,300	50	130
Mastication and native seeding in Tree-Encroached class	1,000	50	350
Walker			
Chainsaw-lop and seed in Tree-Annual-Grass and Tree-Encroached classes	1,000	50	350

The average annual costs of these treatments in low/black sagebrush were for:

- Calcareous region; $1,208,024 for a total of $60,403,726 over 50 years
- Walker region; $55,314 for a total of $2,769,684 over 50 years.

50-YEAR OUTCOME

Removal of trees and seeding reduced, respectively, ED and HR by 10 and 15% in the Calcareous region (Figure 38). Increases in the Early-Succession and Early-Shrub classes (A and ES) were the primary recipient of the treated areas. The BpS remained highly departed, however. These improvements were slight to moderate given the $60 million cost of implementation over 50 years.

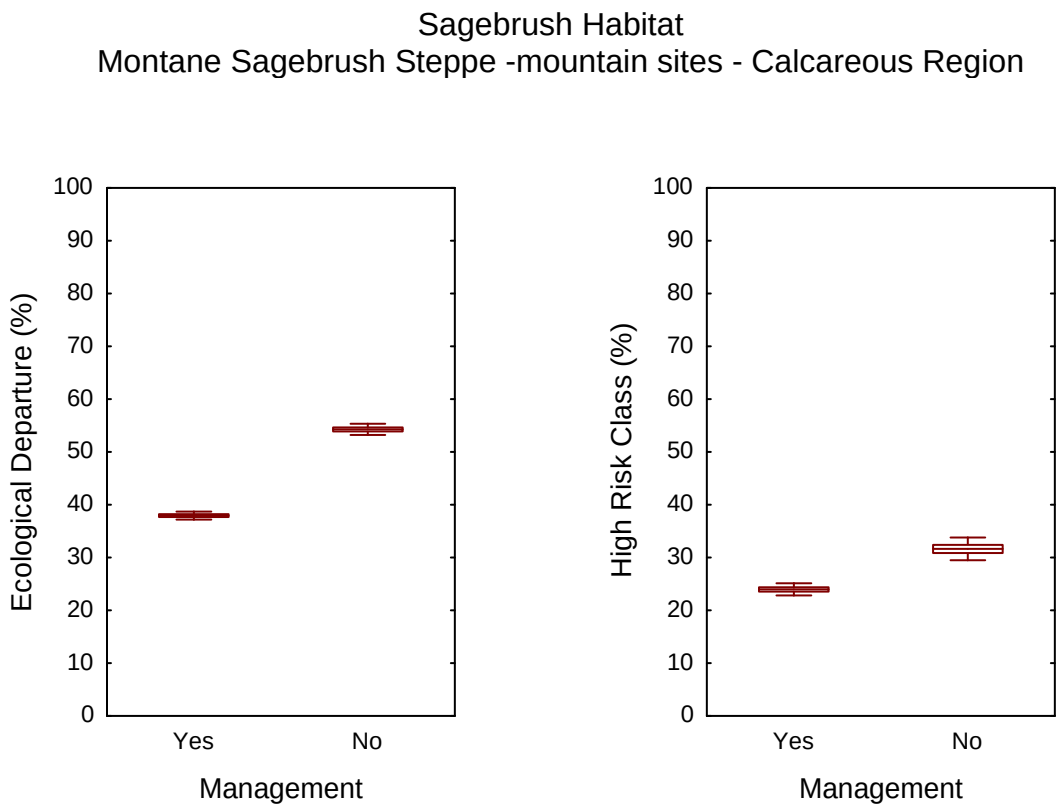

Figure 38. ED and HR for low/black sagebrush simulated with climate change, and with and without management actions in the Calcareous region. Box plot: mean, 1 ± Ste, 1 ± 95% CI, extreme outlier (star). N = 5 replicates.

The pattern of improvement was similar in the Walker region; a 21% reduction of ED and 11% for HR (Figure 39). In contrast to the Calcareous region, the resulting average ED placed the BpS just below in the low departure habitat. The same two vegetation classes also received the majority of the treatment acres.

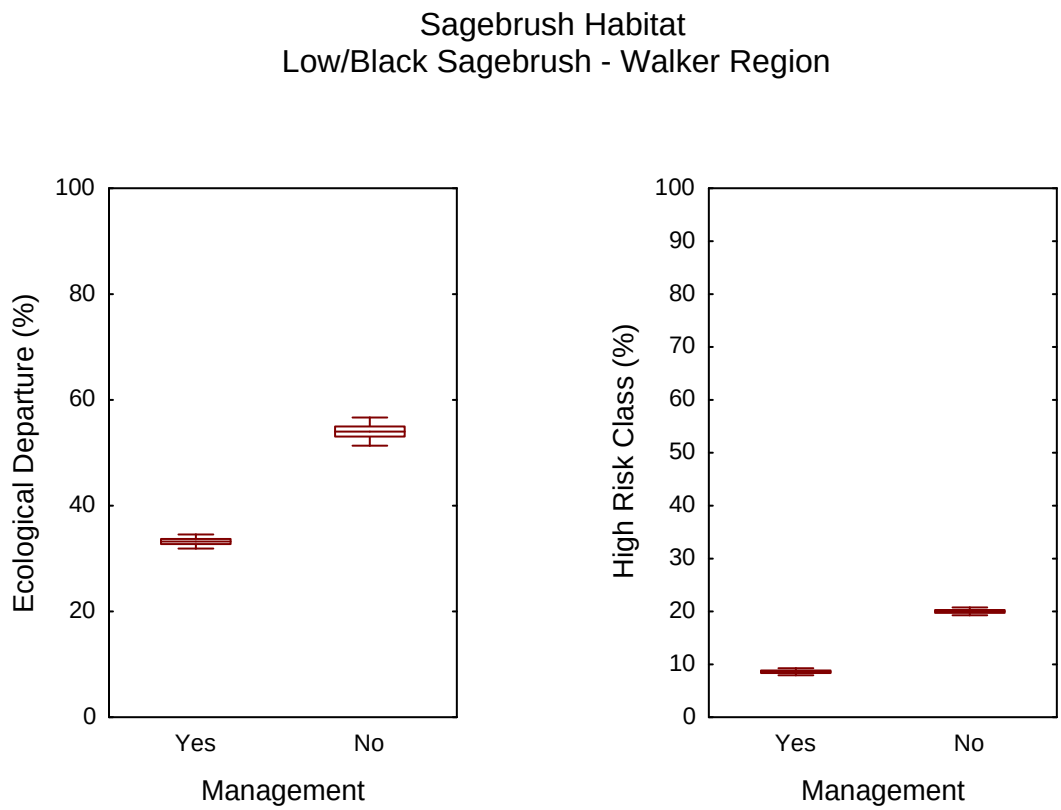

Figure 39. ED and HR for low/black sagebrush simulated with climate change, and with and without management actions in the Walker region. Box plot: mean, 1 ± Ste, 1 ± 95% CI, extreme outlier (star). N = 5 replicates.

MONTANE SAGEBRUSH STEPPE-MOUNTAIN

This subalpine form of big sagebrush is considered by range managers to be very resilient to disturbances because cumulative precipitation is >14 inches. Seed banks and seed sources are rarely a problem and cheatgrass is usually absent. The traditional management action in areas dominated by older vegetation classes is prescribed fire.

50-YEAR PREFERRED MANAGEMENT Strategies and Costs

Strategy	Rate (acres/yr)	Years of Application	Cost ($/acre)
Calcareous			
Prescribed burning in the three oldest succession classes (C, D, and E)	8,800	50	25
Lahontan			

Prescribed burning in the three oldest succession classes (C, D, and E)	3,000	50	110

The average annual cost of this treatment in montane sagebrush steppe-mountain was for:

- Calcareous region; $222,271 for a total of $11,113,271 over 50 years
- Lahontan region; $330,071 for a total of $16,503,595 over 50 years.

50-YEAR OUTCOME

Prescribed burning reduced ED and HR, respectively, by 16% and 8% in the Calcareous region (Figure 40). The BpS remained moderately departed above the 33% cutoff separating low and moderate departure for ED. Simulation result indicated that prescribed fire implementation rates could be increased; however, a significant of amount of depleted sagebrush was not treated in simulation and should be addressed, perhaps with a combination of prescribed burning and aerial seeding at subalpine elevations.

In the Lahontan region, ED was reduced by 11% and HR by 5% (Figure 41). However, the BpS remained at the highest limit of moderate departure with ED at 66%. The BpS in this region has a greater amount of cheatgrass stored in the understory of shrubs in the Shrub-Annual-Grass-Perennial-Grass class (SAP). Prescribed burning did not address this source of departure from reference conditions. As a result, wildfires in this uncharacteristic vegetation class caused transitions to the Annual-Grass class (AG).

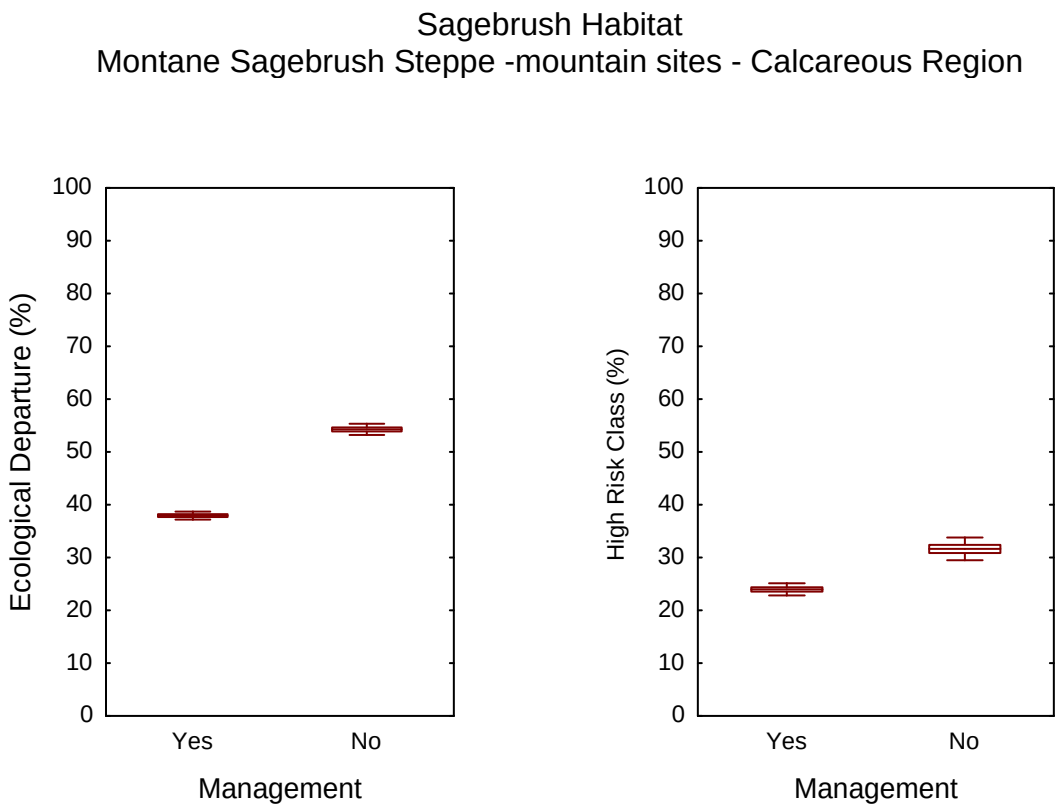

Figure 40. ED and HR for montane sagebrush steppe-mountain simulated with climate change, and with and without management actions in the Calcareous region. Box plot: mean, 1 ± Ste, 1 ± 95% CI, extreme outlier (star). N = 5 replicates.

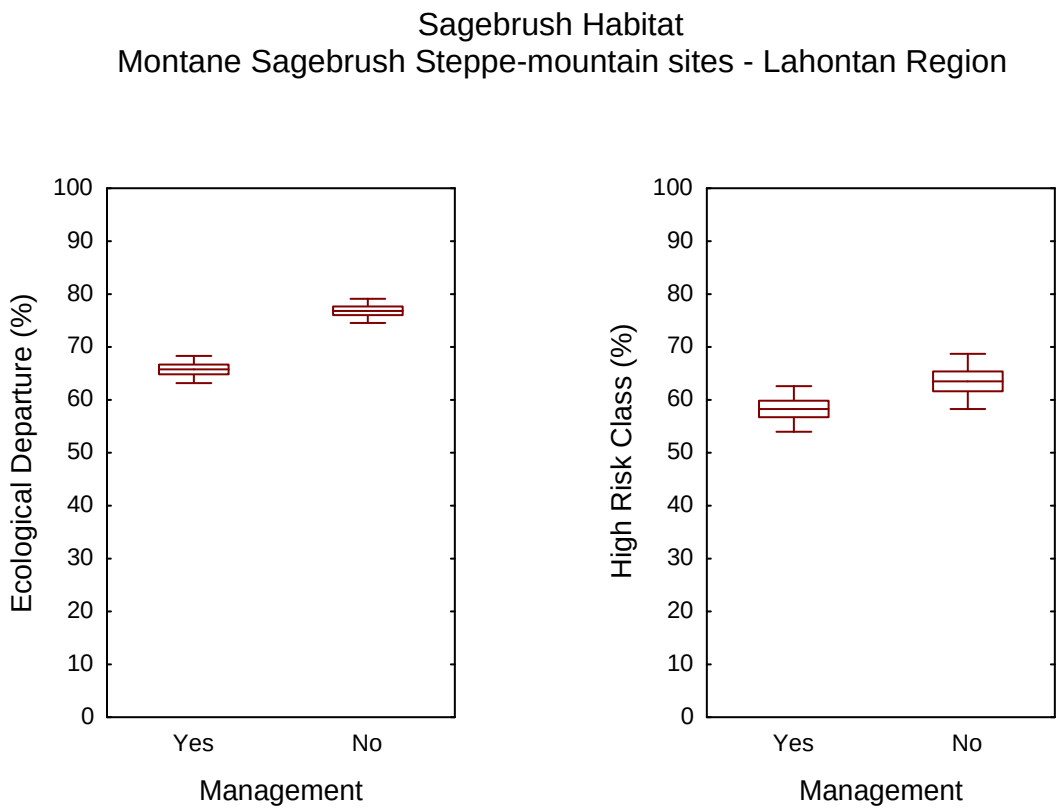

Figure 41. ED and HR for montane sagebrush steppe-mountain simulated with climate change, and with and without management actions in the Lahontan region. Box plot: mean, 1 ± Ste, 1 ± 95% CI, extreme outlier (star). N = 5 replicates.

Aspen Woodland Habitat

The Aspen-Mixed Conifer and Aspen-Woodland BpSs form the aspen-woodland habitat. Results are presented by BpS.

ASPEN-MIXED CONIFER

Also more commonly named seral aspen, the Aspen-Mixed Conifer BpS often suffers from two problem: loss of clones to mixed conifers (primarily white fir and also Engelmann spruce in some ranges) and herbivory on resprouting aspen. The Calcareous region was exemplary of the first problem and, as a result, prescribed burning was simulated to rapidly reduce late-succession classes. In Elko, protection of aspen from herbivory through active livestock herding away from aspen (cowboying) represented a strategy for the second problem.

50-YEAR PREFERRED MANAGEMENT Strategies and Costs

Strategy	Rate (acres/yr)	Years of Application	Cost ($/acre)
Calcareous			
Prescribed burning in the three oldest succession classes (C, D, and E)	3,000	1st 20	50
Elko			
Cowboying (periodic livestock herding away from aspen)	670	50	3

The average annual costs of these treatments in aspen-mixed conifer were for:

- Calcareous region; $147,503 for 20 years for a total of $2,950,071 over 50 years
- Elko region; $1,594 for a total of $79,703 over 50 years.

50-YEAR OUTCOME

For this BpS, there is no High Risk Class. The difference between the two strategies is apparent in Figure 42. In the Calcareous region, ED was reduced by 23% using prescribed burning. ED increased by a non-significant 2.4% in the Elko region. In the Calcareous region, the loss of aspen clones to the Mixed Conifer BpS was slowed and recruitment to younger classes increased. In the Elko region, aspen became older and substantial loss of aspen shrunk the BpS and, as a result, the Mixed Conifer BpS increased.

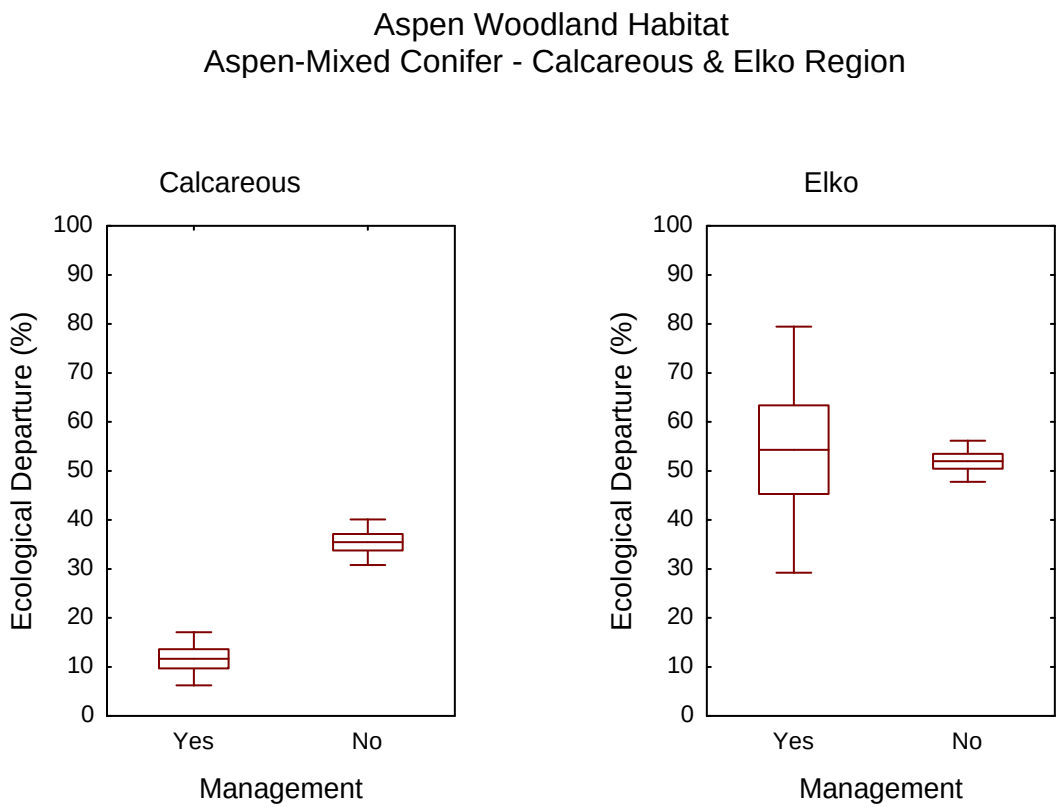

Figure 42. ED for aspen-mixed conifer simulated with climate change, and with and without management actions in the Calcareous and Elko regions. Box plot: mean, 1 ± Ste, 1 ± 95% CI, extreme outlier (star). N = 5 replicates.

ASPEN WOODLAND

The Aspen Woodland BpS, commonly termed "stable" aspen, can experienced excessive herbivory from livestock and wild ungulates, and loss of clones due to lack of stand replacing disturbances and sustained heavy herbivory. The Depleted vegetation class is the only uncharacteristic and high risk class in the BpS that represents an intermediate step before the loss of the clone. This class can be partially recovered, although more fully with fencing that excludes herbivores and less so with prescribed burning and mechanical methods. The late-succession and depleted classes were targeted for management.

50-YEAR PREFERRED MANAGEMENT Strategies and Costs

Strategy	Rate (acres/yr)	Years of Application	Cost ($/acre)
Calcareous			
Prescribed burning by helicopter dropping "ping-pong" balls in late-succession and Depleted classes (C, D, and DP)	2,000	1st 10	50
Elko			
Prescribed fire in the Depleted class	6,000	1st 20	50
Fence depleted aspen	50	1st 20	2000
Cowboying in all classes	5,000	50	3

The average annual costs of these treatments in aspen woodland were for:

- Calcareous region; $50,333 for 10 years for a total of $503,332 over 50 years
- Elko region; $135,663 for a total of $6,783,169 over 50 years.

50-YEAR OUTCOME

In the Calcareous region, prescribed burning had no effect on ED, which was already low, but decreased HR (Depleted class) by 11% (Figure 43). Reduction of the Depleted class would slow down the permanent lost of aspen. In the Elko region, the three management actions, including cowboying sustained for 50 years, reduced, respectively, ED and HR by 8% and 6% (Figure 44). Both metrics were in the low departure zone. The difference in aspen management between the two regions was primarily cost; >10 times more money was spent in the Elko than Calcareous region, which would explain the better results in the former region.

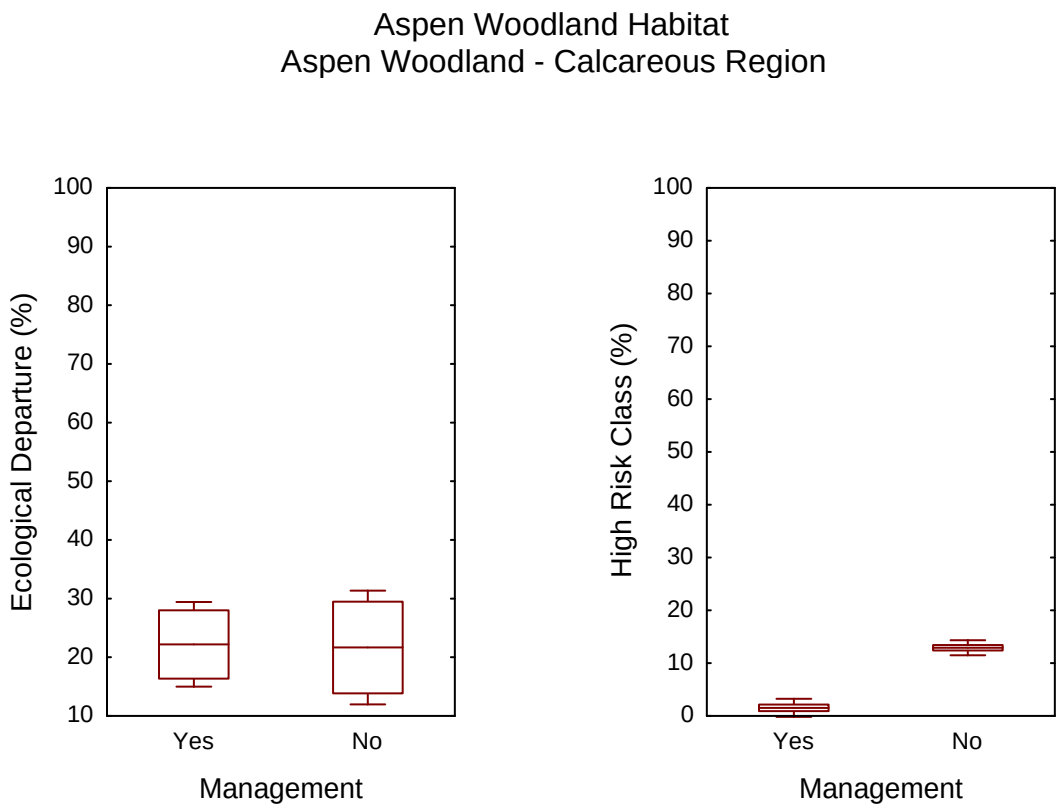

Figure 43. ED and HR for aspen woodland simulated with climate change, and with and without management actions in the Calcareous region. Box plot: mean, 1 ± Ste, 1 ± 95% CI, extreme outlier (star). N = 5 replicates.

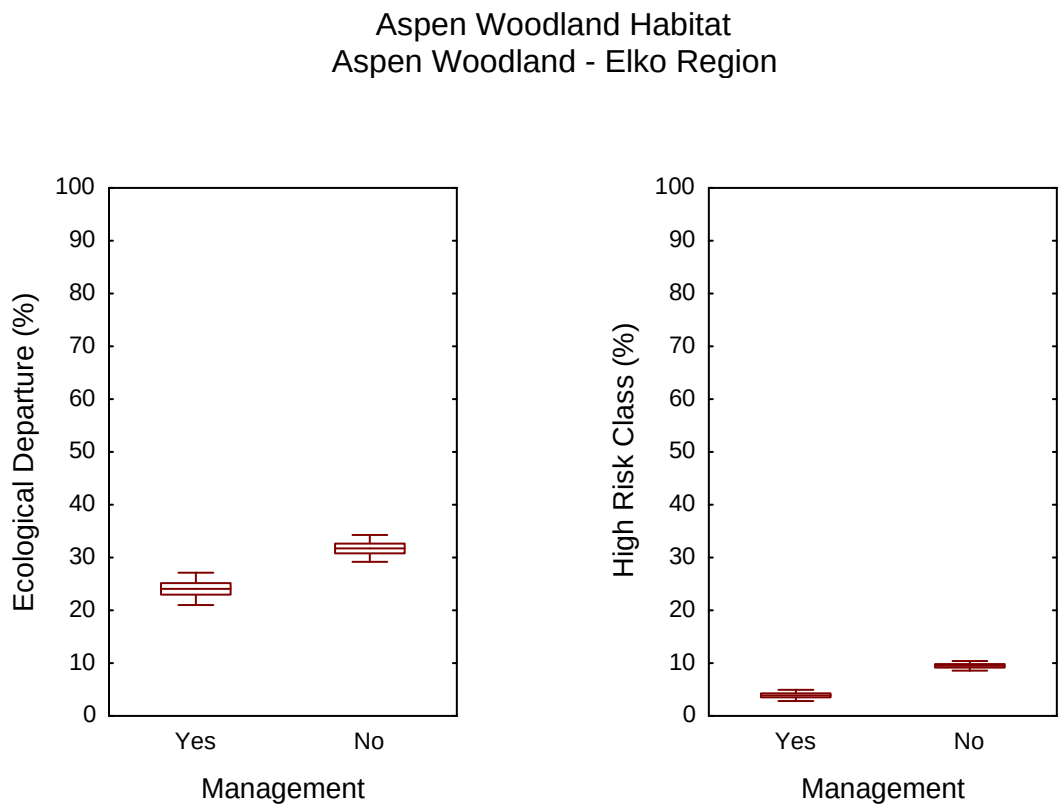

Figure 44. ED and HR for aspen woodland simulated with climate change, and with and without management actions in the Elko region. Box plot: mean, 1 ± Ste, 1 ± 95% CI, extreme outlier (star). N = 5 replicates.

Intermountain Conifer Forest & Woodlands Habitat

Management of Mixed Conifer and Ponderosa Pine BpSs was limited to the Mojave Desert region. The Mixed Conifer BpS is usually limited in range in the Great Basin and rarely receives management attention because it is found on very steep rocky slopes. Prescribed burning was the only action used. Moreover, only closed canopy classes were targeted. Although present, cheatgrass invaded classes were typically uncommon to rare.

50-YEAR PREFERRED MANAGEMENT Strategies and Costs

Strategy	Rate (acres/yr)	Years of Application	Cost ($/acre)
Mixed Conifer			
Prescribed burning of closed classes (B and E)	150	50	50
Ponderosa Pine			
Prescribed burning of closed classes (B and E)	2,000	1st 10	50
Prescribed burning of mid-succession closed class (B)	500	last 40	50

The average annual cost of this treatment in mixed conifer was for:

- Mixed Conifer; $7,972 for a total of $398,852 over 50 years
- Ponderosa Pine: $29,868 for a total of $1,493,327 over 50 years.

50-YEAR OUTCOME

ED was reduced by 20% and 6%, respectively, in Mixed Conifer and Ponderosa Pine BpSs. No detectable change in HR (Figures 45 and 46). Although ED in the Mixed Conifer BpS reached low departure, only moderate departure (close to low departure) was achieved in the Ponderosa Pine BpS; however, variability was high with some replicates achieving low departure.

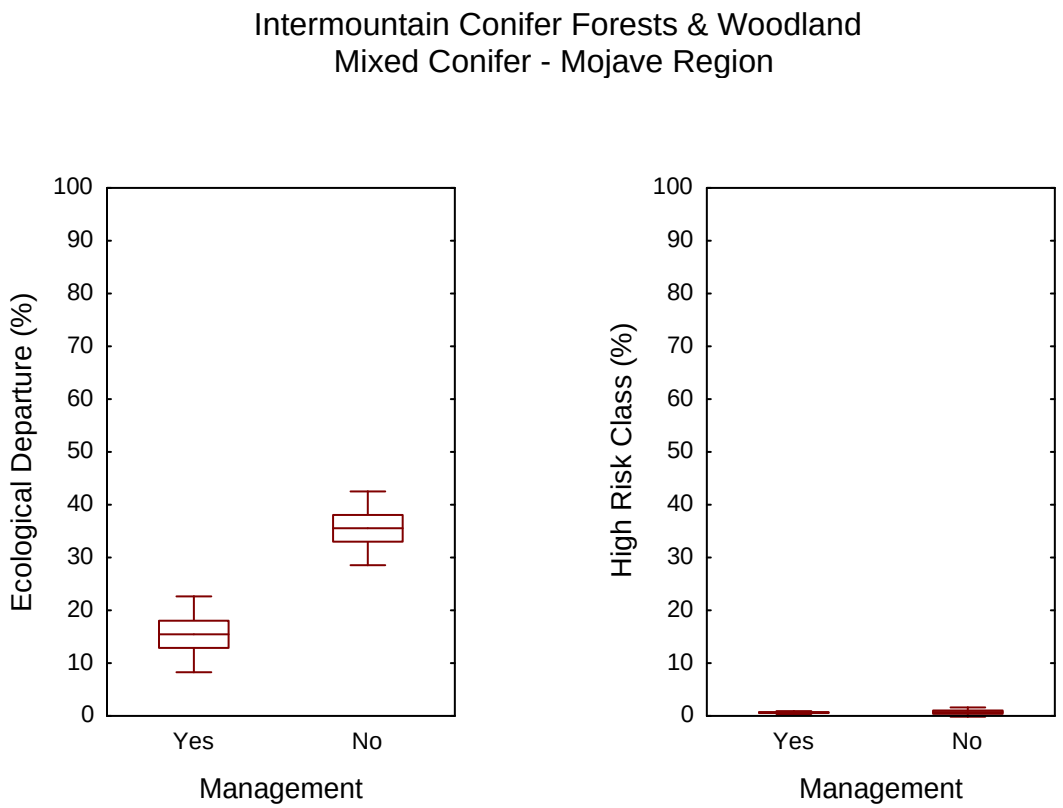

Figure 45. ED and HR for mixed conifer simulated with climate change, and with and without management actions in the Mojave region. Box plot: mean, 1 ± Ste, 1 ± 95% CI, extreme outlier (star). N = 5 replicates.

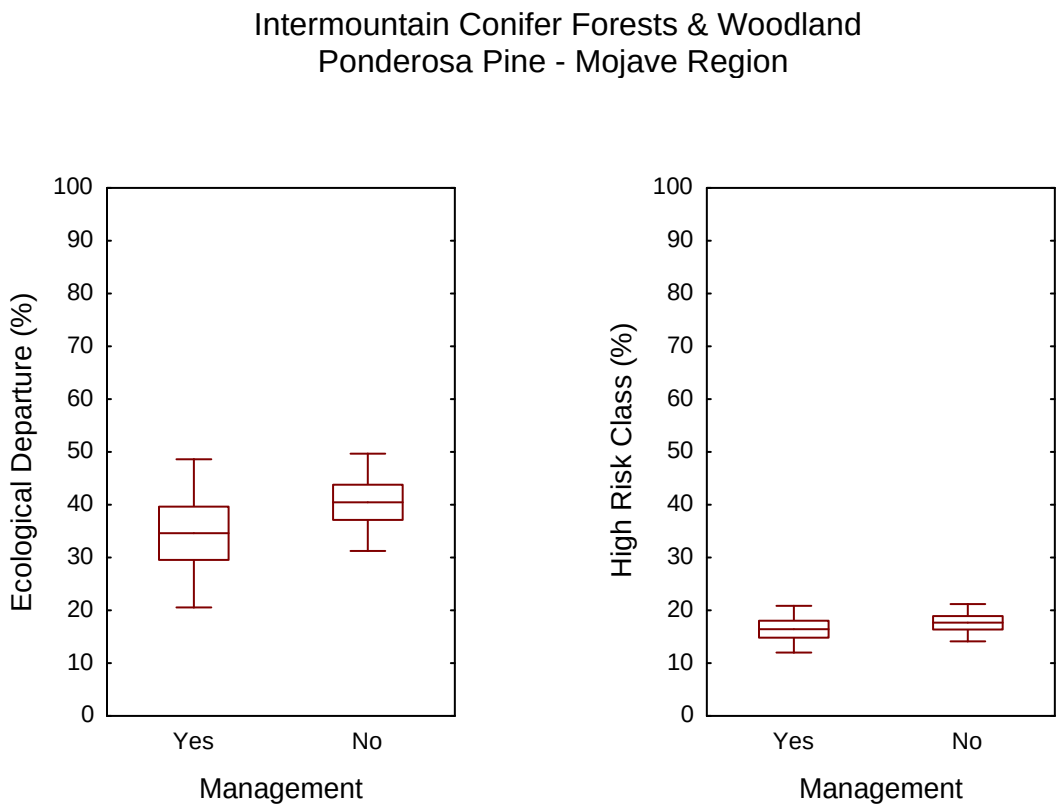

Figure 46. ED and HR for ponderosa pine simulated with climate change, and with and without management actions in the Mojave region. Box plot: mean, 1 ± Ste, 1 ± 95% CI, extreme outlier (star). N = 5 replicates.

Sierra Conifer Forest & Woodlands Habitat

Only two BpSs were simulated for management in the Eastern Sierra Nevada region: Jeffrey Pine and Mixed Conifer. The former BpS did not have the same species composition as in the rest of the state; although white fir can be abundant, it can co-occur with California red fir, western white pine, and lodgepole pine. In this part of the state, extensive urban areas, heavy tourism, and smoke management highly constrain forest management. The greater management challenge in this habitat was the reduction of over-abundant young closed-canopied forests balanced by the requirement to maintain older closed-canopied vegetation classes for threatened and endangered species management. In future years, cheatgrass invasion into more open forests became enough of a problem to received prescriptive grazing management.

50-YEAR PREFERRED MANAGEMENT Strategies and Costs

Strategy	Rate	Years of	Cost

	(acres/yr)	Application	($/acre)
Jeffrey Pine			
➢ Prescribed burning in mid-succession closed class (B)	30	50	650
➢ Masticate young conifers in early succession class (A)	50	50	300
➢ Prescriptive livestock (mostly sheep) grazing in Annual Grassland and Tree-Annual-Grass classes (AG and TA)	1,000	50	10
➢ Pre-commercial thinning of young conifers in early succession class (A)	250	50	750
➢ Commercial thinning of mid-succession closed class (B)	55	50	750
Mixed Conifer			
Thinning, pile burning, and prescribed burning in closed classes (B and E)	10	50	2,000

The average annual costs of these treatments were for:

- Jeffrey pine; $271,576 for a total of $13,578,822 over 50 years.
- Mixed Conifer; $16,729 for a total of $836,435 over 50 years.

50-YEAR OUTCOME

Despite the amount of money spent of reducing closed-canopied classes, average ED only decreased by 4% in both BpSs (Figures 47 and 48). The primary reason for these modest changes was a large increase of the early succession class in the Jeffrey Pine and Mixed Conifer BpSs and a large increase in the mid-succession closed class of the Mixed Conifer BpS. HR decreased by 13% in the Jeffrey Pine BpS, but was unchanged in the Mixed Conifer BpS. Not surprisingly sustained prescriptive grazing to decrease cheatgrass cover in the Jeffery Pine BpS was the source of this decease.

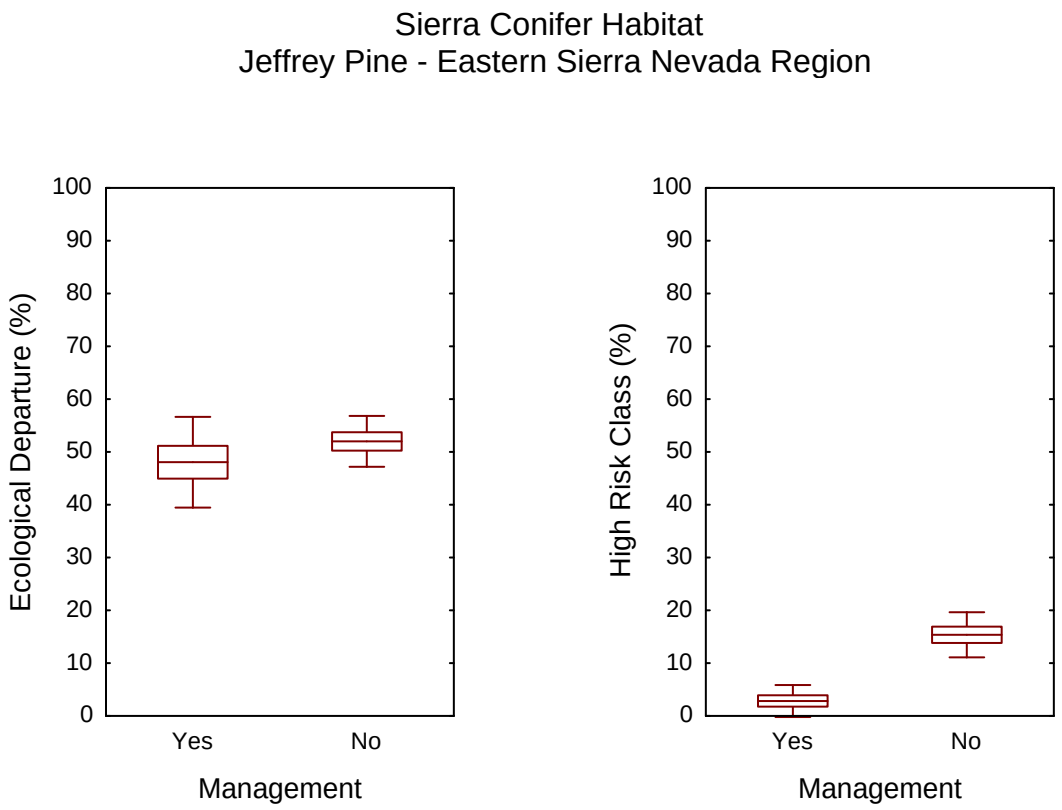

Figure 47. ED and HR for Jeffrey pine simulated with climate change, and with and without management actions in the Eastern Sierra Nevada region. Box plot: mean, 1 ± Ste, 1 ± 95% CI, extreme outlier (star). N = 5 replicates.

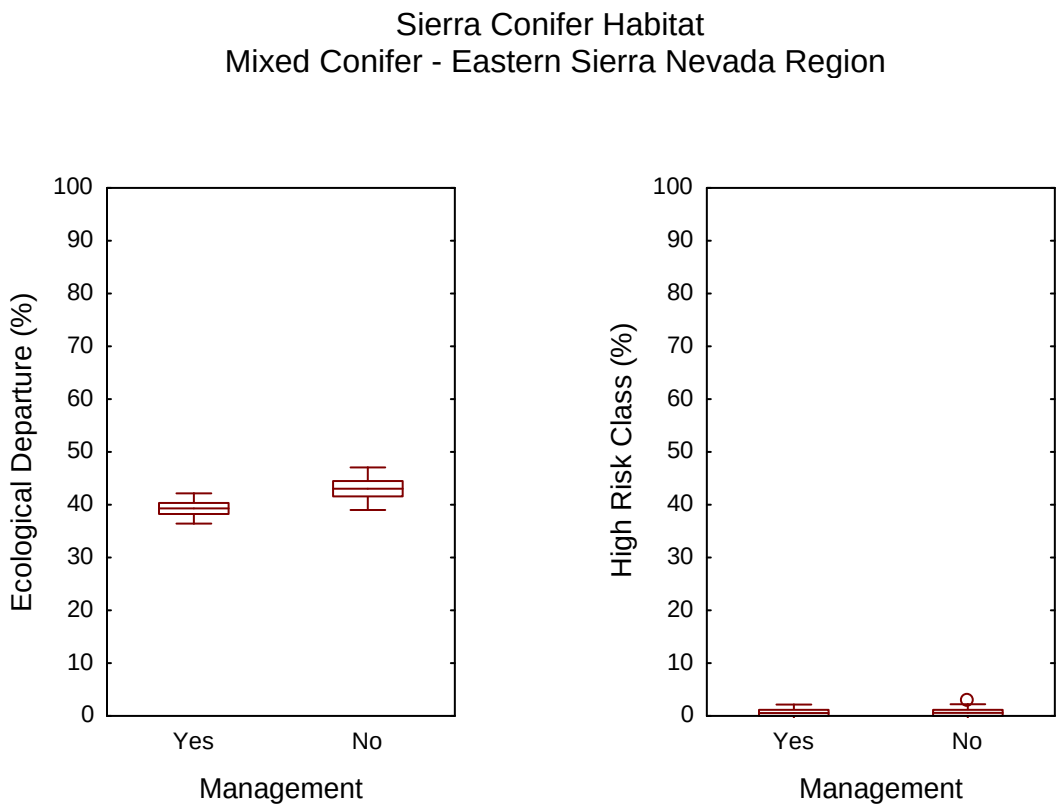

Figure 48. ED and HR for mixed conifer simulated with climate change, and with and without management actions in the Eastern Sierra Nevada region. Box plot: mean, 1 ± Ste, 1 ± 95% CI, extreme outlier (star). N = 5 replicates.

Lessons Learned

We retained seven lessons learned from our complex analysis of climate change in Nevada.

- Large differences in ED and HR were found in regions sharing the same models and climatic data. Differences in initial conditions, sometimes modest, fire activity, and flood regimes accounted for these differences.
- Comparable results were found between the full range shift and half range shifts scenarios; however, the rates and paths of range shifts were entirely hypothetical because no data exist on these topics. There is a dire need for basic conservation research on local range shifts caused by climate change that goes beyond the bioclimatic envelope modeling approach, which appears to greatly overestimate change.
- The regional cost of restoration was staggering for even a few BpS in a few regions. Our simulations easily spent $200 million using scenarios with higher Return-On-Investment. One BpS alone consumed >$75 million. Given the current success rates of restoration technology, the concept of wisely picking battles in a few promising large landscapes appears necessary.

- The staggering cost of restoration was primarily caused by the high failure rates of annual grass control and native plant material at middle and lower elevations. Greater sage-grouse, pygmy rabbit, mule deer, pronghorn, desert tortoise, and Ferruginous Hawk, to name a few wildlife species, prefer the middle and lower elevations. Technological and commercial breakthroughs in annual grass diseases and drought adapted native plant material are badly needed. Also needed until restoration success improves, conservationists need to reconsider the role of mixed species plant material at lower elevations incorporating introduced species (crested wheatgrass and forage koshia) to achieve long-term success by displacement of annual grasses and reconditioning of soils to facilitate recolonization of native species. Conservation organizations either refuse or resist use of introduced species, therefore leaving managers with a choice between annual grasslands and failed seeding returning to annual grasslands at the lower elevations.
- Restoration of the dominant creosotebush-white bursage and blackbrush matrix in the Mojave Desert appears hopeless because the effect of herbicides on annual grasses only persists for two years and the success rate of native plant material establishment is at best 1%. Promising research on plant material currently being conducted might become commercially viable in the next 10-20 years (Abella et al. 2011); however, preservation of the classic Mojave Desert lowlands might depend on accelerating that schedule while managers find temporary and mostly wishful actions to conserve Mojave lowlands.
- The restoration of burned blackbrush communities does not appear possible. Blackbrush communities have been described as fire-sensitive relicts of past climatic periods that do not have the ability to regenerate in the current climate (but see Pendleton et al. 1996). Although blackbrush produces and disperses seeds, small mammals, ants, and plant competition, including for parent plants, reduces establishment success to about 0% (Pendleton et al. 1996). "Young" blackbrush are rare and mostly found on bulldozer-exposed rights-of-ways adjacent to unburned communities (Pendleton et al. 1996). Burned blackbrush communities have two fates: exotic species grassland and forbland or the early-succession snakeweed-yucca-big sagebrush phase that can last a minimum of 200 years (2,000 years at the lowest elevations). Because it is safe to assume that blackbrush will not return to its former potential, the conservation, academic, and management community should think about creation of a BpS without blackbrush on former blackbrush soils. Considering climate change, this new community might include a mixed community of creosotebush, fire-adapted or neutral Mojave shrubs, succulents, white bursage, snakeweed, and many species of the mixed salt desert usually found at lower elevation (Abella et al. 2011).

Acknowledgments
This project was funded by a contract from NDOW to TNC as one component to a larger Q1 Bond award for the Climate Change Revision of the Nevada Wildlife Action Plan. We thank Larry Neel from NDOW for his encouragement, technical advice, time, and keeping us on schedule, and Laura Richards from NDOW for overseeing the project and supporting our ever evolving schedule of deliverables. We are grateful to Susan Abele for managing and initiating the project before moving from TNC to the U.S. Fish and Wildlife Service. The following individuals provided direct technical assistance to the project:

Amanda Brinnand, Curt Baughman, Carol L. Carlock, David Catalano, Gary Cottle, Leslie deFalco, Shawn Espinosa, Todd Esque, Steve Foree, Susan Garlow, Ken Gray, Kathleen Johnson, Kathleen Longshore, Ken Nussear, Duane Petite, Julia Richardson, Justin Rozich, Amery Sifre, Laurie Simons, Robin Tausch, Robert Unnasch, Tom Warren, and Peter Weisberg.

REFERENCES

Abele, S.L., G. Low, and L. Provencher. 2010. Ward Mountain Restoration Project: An ecological assessment and landscape strategy for native ecosystems in the Ward Mountain landscape. Report to the Bureau of Land Management and U.S. Forest Service, Ely, Nevada.

Abella, S.R., D.J. Craig, L.P. Chiquoine, K.A. Prengaman, S.M. Schmid, and T.M. Embrey. 2011. Relation of native desert plants with red brome (*Bromus rubens*): Towards identifying invasion-reducing species. Invasie Plant Science and Management 4:115-124.

Barrett, T.M. 2001. Models of vegetation change for landscape planning: a comparison of FETM, LANDSUM, SIMPPLLE, and VDDT. USDA Forest Service General Technical Report RMRS-GTR-76-WWW.

Beukema, S.J., W.A. Kurz, C.B. Pinkham, K. Milosheva, and L. Frid. 2003. Vegetation Dynamics Development Tool, User's Guide, Version 4.4c. Prepared by ESSA Technologies Ltd.. Vancouver, BC, Canada, 239 p.

Bestelmeyer, B.T., Brown, J.R., Trujillo, D.A., Havstad, K.M., 2004. Land management in the American Southwest: a state-and-transition approach to ecosystem complexity. Environmental Management 34: 38-51.

Biondi, F., Kozubowski. T.J., Panorska, A.K., and L. Saito. 2007. A new stochastic model of episode peak and duration for eco-hydro-climatic applications. Ecological Modelling 211:383-395.

Bradley, B.A. 2009a. Assessing ecosystem threats from global and regional change: hierarchical modeling of risk to sagebrush ecosystems from climate change, land use and invasive species in Nevada, USA. Ecography 32:1-11.

Bradley, B.A. 2009b. Regional analysis of the impacts of climate change on cheatgrass invasion shows potential risk and opportunity. Global Change Biology 15: 196-208.

Brown, T.J., B.L. Hall, and A.L. Westerling. 2004. The impact of twenty-first century climate change on wildland fire danger in the western United States: An applications perspective. Climatic Change 62: 365–388.

Daly, C., M. Halbleib, J.I. Smith, W.P. Gibson, M.K. Doggett, G.H. Taylor, J. Curtis, and P.P. Pasteris. 2008. Physiographically sensitive mapping of climatological temperature and precipitation across the conterminous United States. International Journal of Climatology 28: 2031–2064.

Dettinger, M.D., D.R, Cayan, M.K. Meyer,, and A.E. Jeton. 2004. Simulated hydrologic responses to climate variations and change in the Merced, Carson, American River basins, Sierra Nevada, California, 1900-2099. Climatic Change 62: 283-317.

Forbis T.A., L. Provencher, L. Frid, and G. Medlyn. 2006. Great Basin land management planning using ecological modeling. Environmental Management 38:62–83.

Heddinghaus, T.B., Sahol, P. 1991. A Review of the Palmer. Drought Severity Index and Where Do We Go From Here? Proc. 7th Conf. on Applied Climatology, Salt Lake City, Utah. p. 242-246.

Intergovernmental Panel on Climate Change (IPCC). 2007. Climate Change 2007: Impacts, Adaptation and Vulnerability. Contribution of Working Group 1 to the Fourth Assessment Report of the IPCC. Cambridge University press, Cambridge, UK.

Kelly, A.E., and M.L. Goulden. 2008. Rapid shifts in plant distribution with recent climate change. Proceedings of the National Academy of Sciences 105:11823-11826.

LANDFIREa: LANDFIRE 1.1.0 Biophysical Settings layer. 2010. U.S. Department of Interior, Geological Survey. [Online]. Available: http://landfire.cr.usgs.gov/viewer/

LANDFIREb: LANDFIRE 1.1.0 Succession Class layer. 2010. U.S. Department of Interior, Geological Survey. [Online]. Available: http://landfire.cr.usgs.gov/viewer/

LANDFIREc: LANDFIRE 1.1.0 Existing Vegetation Cover. 2010. U.S. Department of Interior, Geological Survey. [Online]. Available: http://landfire.cr.usgs.gov/viewer/

Low, G., D. Cameron, K. Klausmeyer, J. Mackenzie, and L. Provencher. 2011. Adapting to climate change in the Northern Sierra: From science to action with the Northern Sierra Partnership, version 1.0. Final report for Alan Seelenfreund. The Nature Conservancy, San Francisco, CA & Reno, NV.

Low, G., Provencher, L., Abele, S.A., 2010. Enhanced conservation action planning: assessing landscape condition and predicting benefits of conservation strategies. Journal of Conservation Planning 6:36-60.

Lowry, J.H., Jr., R.D. Ramsey, K. Boykin, D. Bradford, P. Comer, S. Falzarano, W. Kepner, J. Kirby, L. Langs, J. Prior-Magee, G. Manis, L. O'Brien, T. Sajwaj, K. A. Thomas, W. Rieth, S. Schrader, D. Schrupp, K. Shulz, B. Thompson, C. Velasquez, C. Wallace, E. Waller and B. Wolk. 2005. Southwest Regional Gap Analysis Project: Final Report on Land Cover Mapping Methods, RS/GIS Laboratory, Utah State University, Logan, Utah.

Maurer, E.P. 2007. Uncertainty in hydrologic impacts of climate change in the Sierra Nevada, California, under two emissions scenarios. Climatic Change 82: 309-325.

McBride, J.R., Strahan, J. 1984. Establishment and survival of woody riparian species on gravel bars of an intermittent stream. American Midland Naturalist 112:235-245.

Nevada Natural Heritage Program. 2004. Annual Grass Index. Department of Conservation and Natural Resources. [Online] Available: http://heritage.nv.gov/gis/gis.htm

Nevada Natural Heritage Program. 2004. Nevada Noxious Weeds data. Department of Conservation and Natural Resources. [Online] Available: http://heritage.nv.gov/gis/gis.htm

PRISM Climate Group. 2004. United States Average Monthly or Annual Precipitation, 1971-2000. Oregon State University, http://prism.oregonstate.edu

Pendleton, B.K., S.E. Meyer, and R.L. Pendleton. 1996. Blackbrush biology: insights after three years of a long-term study. pp. 223-227 in Roundy, Bruce A., E. Durant McArthur, Jennifer S. Haley, David K. Mann, compilers. Proceedings: wildland shrub and arid land restoration symposium. Gen. Tech. Rep. INT-GTR-315. Ogden, UT: U.S. Department of Agriculture, Forest Service, Intermountain Research Station. 384 p. October 19-21, 1993. Las Vegas, NV

Pennisi, E. 2009. Western U.S. forests suffer death by degrees. Science 323: 447.

Peterson, E.B. 2005. Estimating cover of an invasive grass (Bromus tectorum) using tobit regression and phenology derived from two dates of Landsat ETM+ data. International Journal of Remote Sensing 26:2491–2507.

Provencher, L. 2008. Draft Report to the U.S. Forest Service Spring Mountains National Recreation Area. USDA Forest Service Solicitation AG-9360-S-08-0004: R--Fire Regime Condition Class Mapping for the Spring Mountains Southern Nevada. The Nature Conservancy, Reno, NV.

Provencher, L., Campbell, J., Nachlinger, J., 2008. Implementation of mid-scale fire regime condition class mapping. International Journal of Wildland Fire 17: 390-406.

Provencher L., G. Low G., Abele S., 2009. Bodie Hills Conservation Action Planning. Final Report to the Bureau of Land Management Bishop Field Office, The Nature Conservancy, http://conserveonline.org/library/

Provencher, L., G. Low, and T. Anderson. 2010. Landscape Conservation Forecasting™ report to Great Basin National Park. The Nature Conservancy, Reno, NV.

Rehfeldt, G.H., N.L. Crookston, M.V. Warwell, and J.S. Evans. 2006. Empirical analyses of plant-cliamte relationships for the western United states. International Journal of Plant Science 167:1123-1150.

Rollins, M.G. 2009. LANDFIRE: a nationally consistent vegetation, wildland fire, and fuel assessment. International Journal of Wildland Fire 18:235-249.

Rood, S.B., C.R. Gourley, E.M. Ammon, L.G. Heki, J.R. Klotz, M.L Morrison, D. Mosley, G.G. Scoppettone, S.Swanson, and P.L. Wagner. 2003. Flows for floodplain forests: A successful riparian restoration. BioScience 53: 647-656.

Salzer M.W., M.K. Hughes, A.G. Bunn, and K.F. Kipfmueller. 2009. Recent unprecedented tree-ring growth in bristlecone pine at the highest elevations and possible causes. Proceedings of the National Academy of Sciences U S A. 106:20348-20353.

Shlisky A.J., Hann W.J., 2003. Rapid scientific assessment of mid-scale fire regime conditions in the western US. In 'Proceedings of 3rd International Wildland Fire Conference', 4–6 October. Sydney, Australia.

Smith, S.D., T.E. Huxman, S.F. Zitzer, T. N. Charlet, D.C. Housman, J.S. Coleman, L.K. Fenstermaker, J.R. Seemann, and R.S. Nowak. 2000. Elevated CO_2 increases productivity and invasives species success in an arid ecosystem. Nature 408:79-82.

Stronestrom, D.A. and J.R. Harrill. 2006. Ground-water recharge in the arid and semiarid southwestern United States–Climatic and geologic framework. USGS Professional Paper 1703A.

Tausch, R. J., and R. S. Nowak. 1999. Fifty years of ecotone change between shrub and tree dominance in the Jack Springs Pinyon Research Natural Area. USDA, Forest Service Proceedings RMRS-P-00.

Taylor, A.H., Beaty R.M., 2005. Climatic influences on fire regimes in the northern Sierra Nevada mountains, Lake Tahoe Basin, Nevada, USA. *Journal of Biogeography* 32: 425–438

Tuhy, J., L. Provencher, and G. Low. 2010. Landscape Conservation Forecasting: Report to the Fremont River Ranger District, Fishlake National Forest, USDA Forest Service. The Nature Conservancy, Moab, UT & Reno, NV.

Tuhy, J., L. Provencher, and G. Low. 2010. Landscape Conservation Forecasting: Report to the Powell Ranger District, Dixie National Forest, USDA Forest Service. The Nature Conservancy, Moab, UT & Reno, NV.

Westerling, A.L. Climate change impacts on wildfire. *In* Climate change science and policy. Schneider, Mastrandrea, and Rosencranz, *eds*. Island Press. *In press.*

Westerling, A.L. and B.P. Bryant. 2008. Climate change and wildfire in California. Climatic Change 87: s231-249.

APPENDICES

Appendix I. GIS Codes and queries used to create initial conditions of biophysical settings.

A. Biophysical setting codes.

BPS ID	BPS Name
11	Water
12	Perrennial Ice/Snow
31	Barren
1001	Sparsely Vegetated
1011	Aspen Woodland
1019	Pinyon-Juniper
1020	Limber-Bristlecone Pine Woodland
1023	Oak-Juniper-Pine Woodland
1030	Pacific Oak-Pine Woodland
1031	Jeffrey Pine
1032	Red Fir
1033	Subalpine Woodland
1034	Ultramafic Woodland Chaparral
1050	Lodgepole Pine
1052	Mixed Conifer
1054	Ponderosa Pine
1055	Spruce-Fir
1060	Pacific Oak-Pine Woodland
1061	Aspen-Mixed Conifer
1062	Curlleaf Mountain Mahogany
1071	Alpine
1079	Low-Black Sagebrush
1080	Big Sagebrush-upland
1081	Mixed Salt Desert
1082	Blackbrush
1086	Mountain Shrub
1087	Creosotebush-Bursage
1093	Sand Shrubland
1103	Chaparral
1109	Paloverde-Mixed Cacti
1114	Blue Oak-Pine Woodland
1115	Juniper Savanna
1124	Low Sagebrush Steppe
1125	Big Sagebrush Steppe
1126	Montane Sagebrush-mountain

1135	Semi-Desert Grassland
1137	High Elevation Meadow
1138	Montane Grassland
1139	Lower Elevation Grassland
1153	Greasewood
1154	Montane Riparian
1160	Subalpine Riparian
1161	Conifer Swamp
10800	Wyoming Sagebrush Semidesert
10801	Big Sagebrush-upland
10820	Blackbrush-thermic
10821	Blackbrush-mesic
11550	Warm Desert Riparian
11551	Washes

B.Structure and cover codes

S class ID	S Class name	Model Abbreviation
1	A	A
2	B	B
3	C	C
4	D	D
5	E	E
6	UN	not used
7	UE	not used
8	DPL	DP
9	TRAG	TA
10	AG	AG
11	OVST	not used
12	OVSS	not used
13	TRENC	TE or TA
13	TRENC	TE or TA
13	TRENC	TE or TA
14	SHAP	SAP or SA
15	CWG	SD
16	EXF	EF
17	PAS	PA
18	ENT	DE

C. Queries

BpS Model ID	System Name	Original S-Class	New S-Class	Rule
1011	Aspen Woodland	UN	DPL	if existing veg tree cover (EVC) is < 40%, then DPL
1011	Aspen Woodland	UN	DPL	if SW ReGAP** maps landcover as S032, S033, or S034, then DPL
1011	Aspen Woodland	E	D	If E then class D
1011	Aspen Woodland	UN	DPL	If UN then DPL
1011	Aspen Woodland	UE	DPL	If UE then DPL
1019	Pinyon-Juniper	UE	TRAG	if annual grass index (angrin)*** is > 0, AND existing veg tree cover (EVC) > or equal to 10%, then TRAG
1019	Pinyon-Juniper	A	AG	if index is > 10, then AG
1019	Pinyon-Juniper	UE	AG	if index is > 10, then AG
1019	Pinyon-Juniper	UN	E	If UN then class E
1019	Pinyon-Juniper	UE	TRAG	If UE then TRAG
1020	Limber-Bristlecone Pine Woodland	UN	C	If UN then Class C
1020	Limber-Bristlecone Pine Woodland	UE	A	If UE then class A
1031	Jeffrey Pine	UE	TRAG	if annual grass index is >0, then TRAG
1031	Jeffrey Pine	A	AG	if index is > 10%, then AG
1031	Jeffrey Pine	UN	E	If UN then Class E
1031	Jeffrey Pine	UE	TRAG	remaining pixels after other updates
1032	Red Fir	UN	E	If UN then Class E
1032	Red Fir	UE	TRAG	If UE then TRAG
1033	Subalpine Woodland	UN	C	If UN then Class C
1052	Mixed Conifer	UN or UE	E	UN and UE to class E
1054	Ponderosa Pine	UN	OVST	if existing veg tree cover (EVC) is > 60%, then OVST
1054	Ponderosa Pine	UN	OVSS	if not OVST, then UN is OVSS
1054	Ponderosa Pine	A	AG	if index is > 10%, then AG
1054	Ponderosa Pine	UE	TRAG	If UE then TRAG
1061	Aspen-Mixed Conifer	UN	TRENC	if UN, then TRENC
1061	Aspen-Mixed Conifer	UN	E	If UN then Class E
1061	Aspen-Mixed Conifer	UE	A	If UE then Class A
1062	Curlleaf Mountain Mahogany	UE	TRAG	if annual grass index is > 0, AND existing veg tree cover (EVC) > or equal to 10%, then TRAG
1062	Curlleaf Mountain Mahogany	UE	AG	if index is > 10, then AG OR index 1-10
1062	Curlleaf Mountain Mahogany	A	AG	if index is > 10%, then AG
1062	Curlleaf Mountain Mahogany	UE	TRAG	If UE then TRAG

1062	Curlleaf Mountain Mahogany	UN	E	If UN then Class E
1071	Alpine	UN	B	If UN then Class B
1079	Low-Black Sagebrush	UE	SHAP	if index > 0, AND if existing veg shrub cover (EVC) is > 10%, then SHAP
1079	Low-Black Sagebrush	UE	AG	if index is > 10, then AG OR index 1-10
1079	Low-Black Sagebrush	UE	TRAG	if annual grass index is > 0 AND a) if UE is S040, then TRAG OR; b) if existing veg tree cover (LF) is > 30%, then TRAG
1079	Low-Black Sagebrush	UN	TRENC	if existing veg tree cover (LF) is > 30%, then TRENC
1079	Low-Black Sagebrush	UN	DPL	if UN is not TRENC, then DPL
1079	Low-Black Sagebrush	A	AG	if index is > 10%, then AG
1079	Low-Black Sagebrush	UE	SHAP	remaining UE pixels after other updates
10800	Wyoming Sagebrush Semidesert	UN	DPL	If then then DPL
10800	Wyoming Sagebrush Semidesert	UE	AG	if index is > 10, then AG
10800	Wyoming Sagebrush Semidesert	UE	SHAP	if index > 0, AND if existing veg shrub cover (LF) is > 10%, then SHAP
10800	Wyoming Sagebrush Semidesert	A	AG	if index is > 10%, then AG
10800	Wyoming Sagebrush Semidesert	D & E	TRENC	If D or E then TRENC
10800	Wyoming Sagebrush Semidesert	UE	PAS	if existing veg type is agriculture-pasture/hay (LF EVT), then PAS.
10800	Wyoming Sagebrush Semidesert	UE	SHAP	remaining UE pixels after other updates
10801	Montane Sagebrush-upland	UN	TRENC	if UN is S040, then TRENC OR if existing veg tree cover (LF) is > 50%, then TRENC
10801	Montane Sagebrush-upland	UN	DPL	if not TRENC, then rename all UN to DPL
10801	Montane Sagebrush-upland	UE	AG	if index is > 10, then AG
10801	Montane Sagebrush-upland	UE	SHAP	if index > 0, AND if existing veg shrub cover (LF) is > 10%, then SHAP
10801	Montane Sagebrush-upland	UE	CWG	if SW ReGAP = 'invasive perennial grassland' (D06), then CWG
10801	Montane Sagebrush-upland	UE	TRAG	if annual grass index is > 0 AND; 1) if UE is S040, then TRAG OR 2) if existing veg tree cover (LF) is >

				50%, then TRAG
10801	Montane Sagebrush-upland	A	AG	if index is > 10%, then AG
10801	Montane Sagebrush-upland	UE	SHAP	remaining pixels after other updates
1081	Mixed Salt Desert	UN	B	IF UN then Class B
1081	Mixed Salt Desert	UE	AG	if index is > 10, then AG OR index 1-10 AND existing veg shrub cover (LF) is < 10%
1081	Mixed Salt Desert	UE	SHAP	if index > 0, AND if existing veg shrub cover (EVC) is > 10%, then SHAP
1081	Mixed Salt Desert	A	AG	if index is > 10%, then AG
1081	Mixed Salt Desert	UE	PAS	if existing veg type is agriculture-pasture/hay (LF EVT), then PAS.
1081	Mixed Salt Desert	UE	SHAP	after other updates, remaining UE to SHAP
10820	Blackbrush-thermic	UE	AG	if index is > 10, then AG OR index 1-10
10820	Blackbrush-thermic	UE	SHAP	if index > 0, AND if existing veg shrub cover (EVC) is > 10%, then SHAP
10820	Blackbrush-thermic	UN	B	If UN then Class B
10820	Blackbrush-thermic	UE	SHAP	remaining UE pixels after other updates
10821	Blackbrush-mesic	UE	AG	if index is > 10, then AG OR index 1-10
10821	Blackbrush-mesic	UE	TRENC	if existing veg tree cover (LF) is > 30%, then TRENC
10821	Blackbrush-mesic	UE, B	TRAG	if annual grass index is > 0 AND; 1) if UE is S040, then TRAG OR 2) if existing veg tree cover (LF) is > 50%, then TRAG
10821	Blackbrush-mesic	UE	SHAP	if index > 0, AND if existing veg shrub cover (LF) is > 10%, then SHAP
10821	Blackbrush-mesic	B	TRENC	if existing veg tree cover (LF) is > 30%, then TRENC
10821	Blackbrush-mesic	UN	C	If UN then Class C
10821	Blackbrush-mesic	UE	SHAP	after other updates, remaining UE to SHAP
1086	Mountain Shrub	UN	DPL	if UN and not TRENC, then DPL
1086	Mountain Shrub	UN	TRENC	if existing veg tree cover (LF) is > 20%, then TRENC
1086	Mountain Shrub	UE	SHAP	If UE then SHAP
1087	Creosotebush-Bursage	UE	AG	if index is > 10, then AG OR index 1-10 AND existing veg shrub cover

				(LF) is < 10%
1087	Creosotebush-Bursage	UE	SHAP	if index > 0, AND if existing veg shrub cover (LF) is > 10%, then SHAP
1087	Creosotebush-Bursage	C	B	If Class C then Class B
1087	Creosotebush-Bursage	UN	B	If UN then Class B
1087	Creosotebush-Bursage	UE	SHAP	any remaining UE pixels to SHAP
1103	Chaparral	UE	SHAP	if index > 0, AND if existing veg shrub cover (LF) is > 10%, then SHAP
1103	Chaparral	C,D	B	If Class c or D then Class B
1103	Chaparral	UE or UN	B	If UE then Class B
1115	Juniper Savanna	UN	E	
1115	Juniper Savanna	UE	TRAG	if annual grass index is >0, then TRAG
1115	Juniper Savanna	UE	AG	remaining pixels after other updates
1124	Low Sagebrush Steppe	UN	TRENC	if existing veg tree cover (LF) is > 5%, then TRENC
1124	Low Sagebrush Steppe	UN	DPL	if UN not TRENC, then DPL
1125	Big Sagebrush Steppe	UN	DPL	if UN not TRENC, then DPL
1125	Big Sagebrush Steppe	UN	TRENC	if existing veg tree cover (LF) is > 0%, then TRENC
1125	Big Sagebrush Steppe	UE	AG	if index is > 10, then AG OR index 1-10 AND existing veg shrub cover (LF) is < 10%
1125	Big Sagebrush Steppe	UE	SHAP	if index > 0, AND if existing veg shrub cover (LF) is > 10%, then SHAP
1125	Big Sagebrush Steppe	UE	CWG	if SW ReGAP = 'invasive perennial grassland', then CWG
1125	Big Sagebrush Steppe	UE	TRAG	if annual grass index is > 0 AND; 1) if UE is S040, then TRAG OR 2) if existing veg tree cover (LF) is > 50%, then TRAG
1125	Big Sagebrush Steppe	A	AG	if index is > 10%, then AG
1125	Big Sagebrush Steppe	D	C	If class D then Class C
1125	Big Sagebrush Steppe	UE	SHAP	remaining pixels after other updates
1126	Montane Sagebrush-mountain	UE	AG	If angrass index >10 then ag.
1126	Montane Sagebrush-mountain	UE	SHAP	if not ag then SHAG.
1126	Montane Sagebrush-mountain	UN	DPL	if not TRENC, then DPL
1126	Montane Sagebrush-mountain	UN	TRENC	if existing veg tree cover (LF) is > 60%, then TRENC

1126	Montane Sagebrush-mountain	A	AG	if index is > 10%, then AG
1135	Semi-Desert Grassland	UN	DPL	if UN, then DPL
1135	Semi-Desert Grassland	UE	SHAP	if UE, then SHAP
1135	Semi-Desert Grassland	A	AG	if index is > 10%, then AG
1137	High Elevation Meadow	UE or UN	C	If UN or UE then Class C
1139	Lower Elevation Grassland	UN	TRENC	if existing veg tree cover (LF) is > 5%, then TRENC
1139	Lower Elevation Grassland	UN	C	remaining UN pixels to C
1153	Greasewood	UN	B	If UN then Class B
1153	Greasewood	UE	AG	if index is > 10, then AG OR index 1-10 AND existing veg shrub cover (LF) is < 10%
1153	Greasewood	UE	SHAP	if index > 0, AND if existing veg shrub cover (LF) is > 10%, then SHAP
1153	Greasewood	D	B	If Class D then Class B
1153	Greasewood	C	B	If Class C then Class B
1153	Greasewood	UE	SHAP	remaining UE to SHAP
1154	Montane Riparian	UE	EXF	if existing veg exotic type (LF) is > 0%, then EXF
1154	Montane Riparian	UE	PAS	if existing veg type is agriculture-pasture/hay (LF EVT), then PAS.
1154	Montane Riparian	UN	ENT	if 'upland' shrubs > 30%, then ENT
1154	Montane Riparian	UN	ENT	remaining pixels after other updates
11550	Warm Desert Riparian	UE	EXF	if existing veg exotic type (LF) is > 0%, then EXF
11550	Warm Desert Riparian	UE	EXF	remaining pixels after other updates
11551	Washes	UE	EXF	If UE then EXF
11551	Washes	UN	C	IF UN then class C
1160	Subalpine Riparian	UE	PAS	if existing veg type is agriculture-pasture/hay (LF EVT), then PAS.
1160	Subalpine Riparian	UN	ENT	If UN then ENT
1160	Subalpine Riparian	UE	EXF	remaining pixels after other updates
1154	Montane Riparian	A, B, C, D, E, UN, UE	EXF	If weeds then EXF
1109	Paloverde-Mixed Cacti	UN or UE	C	If UN or UE then Class C

Appendix II: Descriptions of biophysical settings' vegetation classes for the Wildlife Action Plan.

Class Code	Class abbreviation and brief description
	Alpine **1071**
A	***Early***: 0-10% cover of graminoids; <90% soil cover; 0-2 yrs
B	***Late-closed****:* >11% cover of graminoids and forbs; <10% cover of low shrubs; >2 yrs
	Aspen-Mixed Conifer **1061**
A	***Early***; 0-100% cover aspen <5m; mountain snowberry and *ribes* common; 0-19 yrs
B	***Mid1-closed***: 40-99% cover aspen <5-10m; mountain snowberry and *ribes* common; 11-39 yrs
C	***Mid2-closed***: 40-99% cover aspen 10-24m; conifer saplings visible in mid-story; mountain snowberry and *ribes* common; 40-79 yrs
D	***Late-open***: 0-39% cover aspen 10-25 m; 0-25% montane and subalpine conifer cover 5-10 m; mountain snowberry and *ribes* common; >80 yrs
E	***Late-closed***: 40-80% cover of mixed conifer 10-50m; <40% cover of aspen 10-25m; mountain snowberry and *ribes* present; >100 yrs
	Aspen Woodland **1011**
A	***Early***: 0-100% cover of aspen <5m tall; 0-9 yrs
B	***Mid-closed***: 40-99% cover of aspen <5-10m; 10-39 yrs
C	***Late-closed***: 40-99% cover of aspen 10-25m; few conifers in mid-story; >39 yrs
D	***Late-open***: 0-39% cover of aspen 10-25 m; 0-25% conifer cover 10-25 m; >99 yrs
U-DP	***Depleted***: 10-50% cover of older aspen 10-25m; no or little aspen regeneration; few conifers in mid-story
	Big Sagebrush Steppe **1125**
A	***Early***: 20-80% grass (Idaho fescue, Thurber's needlegrass, bluebunch wheatgrass) and forb cover; 0-10% canopy of big sagebrush (mountain and Wyoming)/mountain brush; 0-12 yrs;
B	***Mid-open***: 11-30% cover of big sagebrush (mountain and Wyoming)/mountain shrub; >50% grass (Idaho fescue, Thurber's needlegrass, bluebunch wheatgrass) and forb cover; 13-38 yrs
C	***Late-closed***: 31-50% cover of big sagebrush (mountain and Wyoming)/mountain brush; 25-50% herbaceous cover, <10% conifer sapling cover; 38+ yrs
U-AG	***Annual-Grass***: 10-30% cover of cheatgrass; <10% shrub cover
U-ES	***Early-Shrub***:20-50% cover rabbitbrush species
U-SAP	***Shrub-Annual-Grass-Perennial-Grass***: 21-50% cover of big sagebrush (mountain and Wyoming)/mountain brush; if native grass >5% cover, then >5% cover of cheatgrass or if native grass ≤5% cover, then 0-20% cheatgrass cover; <10% conifer sapling cover; >50 yrs
U-SD	***Seeded***: >10% cover of seeded herbaceous and/or shrub species, either native, introduced, and mixed native and introduced;<5% cheatgrass cover

Class Code	Class abbreviation and brief description
U-TA	***Tree-Annual-Grass***: 20-80% conifer (pinyon, juniper, or montane conifer) cover; <5% shrub cover; if native grass >5% cover, then >5% cover of cheatgrass or if native grass ≤5% cover, then 0-20% cheatgrass cover; >140 yrs
	Big Sagebrush upland (10-14 inch precipitation zone) 10801
A	***Early***: 10-80% grass/forb cover; 0-10% cover of big sagebrush (mountain and Wyoming)/mountain brush; 0-12 yrs
B	***Mid-open***: 11-30% cover of big sagebrush (mountain and Wyoming)/mountain shrub; >50% herbaceous cover; 13-38 yrs
C	***Mid-closed***: 31-50% cover of big sagebrush (mountain and Wyoming)/mountain brush; 25-50% herbaceous cover, <10% conifer sapling cover; 38+ yrs
D	***Late-open***: 10-30% cover conifer <5m for PJ and <10m for mixed conifers; 25-40% cover of big sagebrush (mountain and Wyoming)/mountain brush; <30% herbaceous cover; 80-129 yrs
E	***Late-closed***: 31-80% conifer cover (lower for PJ, greater for mixed conifers) 10-25m; 6-20% shrub cover; <20% herbaceous cover; 130+ yrs
U-AG	***Annual-Grass***: 10-30% cover of cheatgrass; <10% shrub cover
U-DP	***Depleted***: 20-50% cover of big sagebrush (mountain and Wyoming)/mountain brush; <5% herbaceous cover; <5% cheatgrass cover; <10% conifer sapling cover; >50 yrs
U-ES	***Early-Shrub***: 20-50% cover rabbitbrush species
U-SAP	***Shrub-Annual-Grass-Perennial-Grass***: 21-50% cover of big sagebrush (mountain and Wyoming)/mountain brush; ≥5% cover of native grass; 5-10% cheatgrass cover; <10% conifer sapling cover; >50 yrs
U-SA	***Shrub-Annual-Grass***: 21-50% cover of big sagebrush (mountain and Wyoming)/mountain brush; <5% cover of native grass; 5-10% cheatgrass cover; <10% conifer sapling cover; >50 yrs
U-SD	***Seeded***: >10% cover of seeded herbaceous and/or shrub species, either native, introduced, and mixed native and introduced; <5% cheatgrass cover
U-TA	***Tree-Annual-Grass***: 31-80% conifer cover 10-25m; <5% shrub cover; <5% herbaceous cover, ≥5% cheatgrass cover; >140 yrs
U-TE	***Tree-Encroached***: 31-80% conifer cover 10-25m; <5% shrub cover; <5% herbaceous cover, <5% cheatgrass cover; >140 yrs
	Blackbrush - mesic (>9 inch precipitation zone; BM) 10821
A	***Early***: 0-40% cover of snakeweed, big sagebrush, turpentine bush, yucca, and desert bitterbrush; young blackbrush may be present; 0-199 yrs
B	***Mid-closed***: 10-50% cover blackbrush <1.0m; >5% cover of young Joshua trees; <10% cover of grasses (desert needlegrass, Indian ricegrass, galleta grass, fluff grass, and threeawn); other shrubs present; Joshua trees may be present; pinyon or juniper saplings present; 200+ yrs
C	***Late-open***: 10-40% of pinyon or juniper; 5-40% blackbrush cover; >5% cover of Joshua trees; <10% cover of grasses (desert needlegrass, Indian ricegrass, galleta grass, fluff grass, and threeawn); other shrubs present; Joshua trees may be present; 400+ yrs

Class Code	Class abbreviation and brief description
U-TA	***Tree-Annual-Grass***: 10-40% of pinyon or juniper; >5% cover of non-native grasses; <20% blackbrush cover; Joshua trees may be present
U-SAP	***Shrub-Annual-Grass-Perennial-Grass***: 10-50% cover of blackbrush or other shrubs <1.0m tall; Joshua trees may be present; 5-20% non-native grass or forb cover; native grass cover may be spotty to common
U-AG	***Annual-Grass*:** >10% cover of exotic forbs or annual grasses; <10% cover of blackbrush or other shrubs
U-SD	***Seeded***: >10% seeded native or non-native grasses, forbs, and shrubs
U-BG	***Bare ground***: mineral soil exposed by human disturbances
	Blackbrush - thermic (≤9 inch precipitation zone; BT) **10820**
A	***Early***: 0-50% cover of snakeweed, turpentine bush, yucca; <10% cover blackbrush; 0-499 yrs
B	***Late-closed***: 500+ yrs; 10-40% cover blackbrush <1.0m; white bursage or creosotebush present; >5% cover of Joshua trees; 0-10% cover of grasses (desert needlegrass, Indian ricegrass, galleta grass, fluff grass, and threeawn); other shrubs present
U-SAP	***Shrub- Annual-Grass-Perennial-Grass*:** 10-40% cover of blackbrush or other shrubs <1.0m tall, 5-20% non-native grass or forb cover; Joshua trees may be present; ≥5% native grass cover
U-AG	***Annual-Grass***: >10% cover of exotic forbs or annual grasses; <10% cover of blackbrush or other shrubs
U-BG	***Bare ground***: mineral soil exposed by human disturbances
	Chaparral **1104**
A	***Early***: 10-100% cover of *Quercus turbinella, Quercus toumeyi, Cercocarpus montanus, Canotia holacantha, Ceanothus greggii* <3m tall; forbs abundant; 0-10 yrs
B	***Late-closed***: 50-100% cover of *Quercus turbinella, Quercus toumeyi, Cercocarpus montanus, Canotia holacantha, Ceanothus greggii* >3m tall; 10+ yrs
U-SAP	***Shrub-Annual-Perennial-Grass***: >5% cheatgrass cover in spaces between shrubs; 10-100% cover of *Quercus turbinella, Quercus toumeyi, Cercocarpus montanus, Canotia holacantha, Ceanothus greggii* <3m tall; forbs abundant
	Creosotebush-White Bursage Scrub **1087**
A	***Early***: 5-9% cover of creosote and white bursage builds up over time; 5-20% grass cover depending on winter precipitation and season; 0-19 yrs
B	***Late-closed***: 10-40% creosote and white bursage cover; 5-20% grass and forb cover (depending on winter precipitation, soil productivity, and season); Joshua trees may be present; 20+ yrs
U-AG	***Annual-Grass***: >10% cover of annual exotic forbs or grasses; <10% cover of creosotebush, white bursage, or other shrubs
U-BG	***Bare ground***: mineral soil exposed by human disturbances

Class Code	Class abbreviation and brief description
U-SAP	***Shrub-Annual-Grass-Perennial-Grass***: 10-40% cover of creosote and white bursage; >5% non-native grass or forb cover; native grass and forb may be present to common(depending on winter precipitation, soil productivity, and season); Joshua trees may be present
	Curl-leaf Mountain Mahogany 1062
A	***Early***: 10-55% cover mountain mahogany seedlings and saplings, 0-2m; mineral soil abundant; grasses and shrubs present but not abundant; 0-19 yrs
B	***Mid-Open***: 0-30% cover mountain mahogany 2-5m; mineral soil abundant; grasses and mountain sagebrush, snowberry, and mountain snowberry common; 20-59 yrs
C	***Mid-Closed***: 30-45% cover of mountain mahogany, mountain sagebrush, snowberry, and mountain snowberry 2-5m high; 60-59 yrs
D	***Late-Open***: 0-30% cover of large diameter mountain mahogany 5-25m; grasses and mountain sagebrush, snowberry, and mountain snowberry common; >60 yrs
E	***Late-Closed***: 30-55% cover of mature mountain mahogany, 5-25m; >49 yrs;
U-AG	***Annual-Grass***: 5-30% cheatgrass cover; <10% shrub cover
U-TA	***Tree-Annual-Grass***: 10-55% cover of mountain mahogany; 5-20% cheatgrass cover
	Greasewood 1153
A	***Early***: 0-20% herbaceous (inland saltgrass, bottlebrush squirreltail, and alkali sacaton) cover; <5% cover rabbitbrush and resprouting greasewood; 0-5 yrs
B	***Late-closed***: 15-25% greasewood cover; <10% cover other shrubs (rabbitbrush, saltbushes, and budsage); <10% cover of grass (inland saltgrass, bottlebrush squirreltail, and alkali sacaton); >5 yrs
U-*AG*	***Annual-Grass***: 5-30% non-native annual grass cover; <10% shrub cover
U-*SA*	***Shrub-Annual-Grass***: 5-25% cover of greasewood; 5-20% non-native grass cover
U-*SD*	***Seeded***: 5-20% seeded native or introduced species cover
	High Elevation Meadow 1145
A	***Early***: 20-60% cover of diverse tall forbs with a minor graminoid component (*Agastache* spp., *Chamerion* spp., *Erigeron* spp., *Senecio* spp., *Helianthella* spp., *Mertensia* spp., *Penstemon* spp., *Campanula* spp., *Hackelia* spp., *Lupinus* spp., *Solidago* spp., *Ligusticum* spp., *Osmorhiza* spp., *Thalictrum* spp., *Valeriana* spp.,*Balsamorhiza* spp., *Wyethia* spp., *Bromus* spp, *Danthonia* spp., *Deschampsia* spp., *Koeleria* spp., *Elymus* spp., *Phleum* spp., and *Dasiphora* spp.); 40-80% fine textured soil; 0-4 years
B	***Mid-closed***: 60-100% cover of diverse tall forbs with a minor graminoid component; <5% shrub cover; 5-9 years
C	***Late-closed***: 5-10% shrub cover of *Populus tremuloides*, *Arrtemisia cana*, *Artemisia tridentata*, *Rosa woodsii*, *Ribes* spp., *Amelanchier* spp.; 90-95% cover of diverse tall forbs with a minor graminoid component; 10-300 years
U-UF	***Unpalatable Forb***: >60% cover of uncharacteristic forbs usually dominated by *Wyethia* spp.
U-US	***Unpalatable Shrub***: >60% cover of uncharacteristic shrubs dominated by *Artemisia cana* and *Rosa woodsii*.

Class Code	Class abbreviation and brief description
	Jeffrey Pine **1031**
A	***Early***: 0-60% cover of shrub/grass; conifer seedlings can be abundant <5m; 0-39yrs;
B	***Mid-closed***: 40-60% cover of Jeffrey pine, white fir and 5-10m; dense shrub cover possible; 40-159yrs
C	***Mid-open***: 10-39% cover of Jeffrey pine; abundant shrub and grass cover; 40-159yrs
D	***Late-open***: 10-39% cover of Jeffrey pine 11--50m; abundant shrub and grass cover; >160 yrs
E	***Late-closed***: 40-80% cover of Jeffrey pine,11-50m; mountain snowberry common; ; >160 yrs
U-AG	***Annual-Grass***: >10% cheatgrass cover; trees largely absent; charred logs or standing dead trees often present; native grasses and forbs present to abundant
U-TA	***Tree-Annual-Grass***:10-80% cover of young and older Jeffrey pine and white fir; >5% cheatgrass cover; native grass and shrubs present to abundant
	Juniper savanna **1115**
A	***Early***: 10-30% herbaceous cover ; 0-19 yrs
B	***Mid-Open***: 10-30% cover big sage <0.5m tall; 10-40% herbaceous cover; 20-39 yrs
C	***Mid-Closed***: 10-40% shrub cover 0.5-1.0m tall; 11-30% cover of juniper <2m; <20% herbaceous cover; 40-99 yrs
D	***Late-Open***:10-20% cover of juniper <5m tall; 10-20% shrub cover; <20% herbaceous cover; 100-399 yrs
E	***Late-Closed***:21-40% cover of juniper <10m tall; 10-20% shrub cover; <20% herbaceous cover; >400 yrs
U-AG	***Annual-Grass***: 10-30% non-native annual grass; <10% rabbitbrush or snakeweed cover; charred stumped of juniper evident
U-TA	***Tree-Annual-Grass***: 10-40% cover of juniper; 10-20% shrub cover; <10% herbaceous cover; 5-20% cover of annual grass
	Limber-Bristlecone Pine Woodland **1020**
A	***Early***: 0-10% limber and bristlecone pine cover 0-5m high; abundant mineral soil or talus cover; sparse ground cover; 0-99 yrs
B	***Mid-Open***: 11-30% limber and bristlecone pine cover 5-10m high; abundant mineral soil or talus cover; sparse ground cover; 100-249 yrs
C	***Late-Open***: very old trees; 11-30% limber and bristlecone pine cover 5-25m high; abundant mineral soil or talus cover; sparse ground cover; >250 yrs
	Low-Black Sagebrush **1079**
A	***Early***: <10% cover rabbitbrush; 10-40% cover of grass; 50-80% cover mineral soil; 0-25 yrs
B	***Mid-open***: 10-20% cover of black sagebrush or low sagebrush and rabbitbrush; 10-30% grass cover; <40% cover of mineral soil; 25-119 yrs

Class Code	Class abbreviation and brief description
C	***Late-Closed***: 20-30% cover of black sagebrush or 10-30% cover of low sagebrush; 10-30% cover of grasses; 1-10% pinyon-juniper sapling cover; 120-194 yrs
D	***Late-Open***: 10-30% cover of mature pinyon or juniper on black sagebrush sites or 5-20% cover of mature pinyon or juniper on low sagebrush sites; <10% black sagebrush or 5-20% cover of low sagebrush; <10% grass cover; >195 yrs
U-AG	***Annual-Grass***: 10-30% cover of cheatgrass
U-DP	***Depleted***: 20-50% cover of black sagebrush or 10-30% cover of low sagebrush; <5% herbaceous cover; <10% pinyon or juniper sapling cover
U-ES	***Early-Shrub***: 10-40% cover rabbitbrush species
U-SAP	***Shrub-Annual-Grass-Perennial-Grass***: 20-50% cover of black sagebrush or 10-30% cover of low sagebrush; >5% cover of native grass; 5-20% cheatgrass cover; <10% pinyon or juniper sapling cover
U-SA	***Shrub-Annual-Grass***: 20-50% cover of black sagebrush or 10-30% cover of low sagebrush; <5% cover of native grass; 5-20% cheatgrass cover; <10% pinyon or juniper sapling cover
U-SD	***Seeded***: 5-20% cover of native or non-native (crested wheatgrass, forage koshia) seed mix; ≤5% cover of annual grass
U-TA	***Tree-Annual-Grass***: >20% pinyon or juniper cover on black sagebrush sites or >10% pinyon or juniper cover on low sagebrush sites 10m; >5% cover of annual grass; <5% shrub cover; <5% herbaceous cover
U-TE	***Tree-Encroached***: >20% pinyon or juniper cover on black sagebrush sites or >10% pinyon or juniper cover on low sagebrush sites; <5% shrub cover; <5% native herbaceous cover; ≤5% cover of annual grass
	Low Elevation Grassland 1139
A	***Early***: 10-30% grass cover (*Festuca idahoensis*, *F. compestris*, Pseud*oroegneria spicata*, *Koeleria macratha*); 0-10% cover of forbs (*Colinsia* spp., *Lupinus* spp., *Epilobium* spp., *Balsamorhiza* spp., *Geum* spp., *Potentilla* spp.); 0-4 yrs
B	***Mid-Closed***: 41-80% cover of grass; 10-20% forb cover; shrubs present but low stature; 5-64 yrs
C	***Late-Open***: 11-20% shrub cover (*Symphoricarpus alba* and *Rosa* spp.); 41-80% grass cover; <10% forb cover; >65 yrs
U-AG	***Annual-Grass***; 5-30% cheatgrass cover; <5% shrub cover; native tree cover <5%
U-ES	***Early-Shrub***: 10-40% cover rabbitbrush species
U-SAP	***Shrub-Annual-Grass-Perennial-Grass***: >20% shrub cover; >5% annual grass; <40% herbaceous cover; mineral soil common
U-TA	***Tree-Annual-Grass***: >5% pinyon, juniper cover, or montane conifer; shrub herbaceous cover variable but usually >20%; <41% native grass cover; annual grass may be present, especially under the canopy of trees
	Low Sagebrush Steppe (>14 inch precipitation zone) 1124
A	***Early***: 15-25% herbaceous cover (bluebunch wheatgrass, Thurber's needlegrass); 0-10% cover of rabbitbrush; 0-25 yrs
B	***Mid-open***: 11-20% cover of low sagebrush and mountain snowberry; 15-25%

Class Code	Class abbreviation and brief description
	herbaceous cover (bluebunch wheatgrass, Thurber's needlegrass); 25-99 yrs
C	***Late-Closed***: 21-30% cover of low sagebrush and Utah serviceberry; 10-15% herbaceous cover (bluebunch wheatgrass); >100 yrs
U-DP	***Depleted***: 10-30% cover of low sagebrush; <5% herbaceous cover; <10% pinyon or juniper sapling cover
U-ES	***Early*-Shrub**: 10-40% cover rabbitbrush species
U-TE	***Tree-Encroached***: >10% pinyon, juniper cover, or montane-subalpine conifer; <5% shrub cover; <5% native herbaceous cover; annual grass usually absent
	Mixed Conifer 1052
A	***Early***: 0-15% cover of tree/shrub/grass; <5m; 0-29 yrs
B	***Mid-closed***: 35-100% cover of white fir and other conifers <24m; 30-99 yrs
C	***Mid-open***: 0-35% cover of white fir and other conifers <24m; 30-99 yrs
D	***Late-open***: 0-35% cover of white fir and other conifers 25-49m; >100 yrs
E	***Late-closed***: 35-100% cover of white fir and other conifers 25-49m; >100 yrs
U-AG	***Annual-Grass***: >10% cheatgrass cover; <10% shrub cover; trees largely absent; charred logs or standing dead trees often present; native grasses and forbs present to abundant
U-TA	***Tree-Annual-Grass***: 10-80% cover of young and older white fir and other conifers; >5% cheatgrass cover; native grass and shrubs present to abundant
	Mixed Salt Desert Scrub 1081
A	***Early***: 0-5% cover of young *Atriplex* spp. or other shrubs, Indian ricegrass and squirreltail common; 0-5 yrs
B	***Late1*-open**: 5-20% cover *Atriplex* spp. or other shrubs; >6 yrs
C	***Late2*-open**: 5-20% cover budsage <0.25m; >7 years
U-AG	***Annual-Grass***: 5-30% cheatgrass cover; <10% shrub cover
U-SA	***Shrub-Annual-Grass***: 5-20% cover of *Atriplex* spp. or other shrubs; 5-20% cheatgrass cover
U-SD	***Seeded***: native or non-native (crested wheatgrass, forage koshia) seed mix cover 5-20%
	Montane Riparian (carbonate or non-carbonate geology) 1154
A	***Early***: 0-50% cover of cottonwood, willow, Wood's rose <3m; carex present; 0-5 yrs
B	***Mid-open***: 31-100% cover of cottonwood, aspen, willow, Wood's rose <10m; 5-20 yrs;
C	***Late-closed***: 31-100% cover of cottonwood, alder, aspen, willow 10-24m; >20 yrs
U-EF	***Exotic-Forb***: 5-100% cover of exotic forbs (knapweed, tall whitetop, purple loosestrife, thistle), salt cedar, or Russian olive
U-DE	***Desertification***: Entrenched river/creek with 10-50% cover of upland shrubs (e.g., big sage); cheatgrass absent to common
U-PA	***Pasture***: agricultural pasture

Class Code	Class abbreviation and brief description
U-SFE	***Shrub-Forb-Encroached***: 10-50% cover of unpalatable shrub and forb species (*Rosa woodsii* and *Rhus trilobata*) in open areas or under tree canopy
	Montane Sagebrush Steppe mountain (≥14 inch precipitation zone) 1126m
A	***Early***: 0-10% canopy of mountain sagebrush/ mountain brush; >50% grass/forb cover; 0-12 yrs
B	***Mid-open***: 11-30% cover of mountain sagebrush / mountain shrub; >50% herbaceous cover; 13-37 yrs
C	***Mid-closed:*** 31-50% cover of mountain sagebrush / mountain brush; 25-50% herbaceous cover; <10% conifer sapling cover; >38 yrs
D	***Late-open***: 10-30% cover conifer <10m; 25-40% cover of mountain sagebrush / mountain brush; <30% herbaceous cover; 80-129 yrs
E	***Late-closed***: 31-80% conifer cover 10-25m; 6-20% shrub cover, <20% herbaceous cover; >129 yrs
U-AG	***Annual-Grass***: 10-30% cover of cheatgrass; <10% shrub cover
U-DP	***Depleted***: 20-50% cover of mountain big sagebrush/mountain brush; <10% herbaceous cover; <5% cheatgrass cover; <10% conifer sapling cover; >50 yrs
U-ES	***Early-Shrub***: 10-50% cover rabbitbrush species
U-SAP	***Shrub-Annual-Grass-Perennial-Grass***: 21-50% cover of mountain big sagebrush/mountain brush; ≥10% cover of native grass; 5-10% cheatgrass cover; <10% conifer sapling cover; >50 yrs
U-TE	***Tree-Encroached***: 31-80% conifer (usually montane conifer and pinyon) cover 10-25m; <5% shrub cover; <5% herbaceous cover; >130 yrs
	Mountain Shrub 1086
A	***Early***: 0-10% canopy of Utah snowberry/antelope bitterbrush; 10-80% grass/forb cover; 0-4 yrs
B	***Mid-open***: 11-30% cover of Utah snowberry/antelope bitterbrush; >50% herbaceous cover; 5-19 yrs
C	***Mid-closed***: 31-50% cover of Utah snowberry/antelope bitterbrush/mountain big sagebrush; 25-50% herbaceous cover, <10% conifer sapling cover;20-79 yrs
D	***Late-open***: 10-20% pinyon pine-white fir cover <5m; 25-40% cover of Utah snowberry/antelope bitterbrush/mountain big sagebrush; <30% herbaceous cover; >80 yrs
U-DP	***Depleted***: 20-50% cover of Utah snowberry/antelope bitterbrush/mountain big sagebrush; <5% herbaceous cover; <10% pinyon sapling cover
U-ES	***Early-Shrub***: 20-50% cover rabbitbrush species
U-SAP	***Shrub-Annual-Grass-Perennial-Grass***: 20-50% cover of Utah snowberry/antelope bitterbrush/mountain big sagebrush; >5% cover of native grass; 5-10% cheatgrass cover; <10% pinyon sapling cover
U-TE	***Tree-Encroached***: >21% pinyon pine-white fir cover 10-25m; <5% shrub cover; <5% herbaceous cover
	Paloverde Mixed Cacti 1109

Class Code	Class abbreviation and brief description
A	***Early-open***: 5-30% herbaceous cover dominated by brittlebrush (*Encelia farinosa*); 0-19 yrs
B	***Mid-open***: 5-30% cover of brittlebrush with woody succulents and woody early-succession plants growing beneath the brittlebrush canopy; 20-94 yrs
B	***Late-closed***: 5-30% cover of white bursage (*Ambrosia dumosa*); 10-30% cover of succulents and small tree-dominated communities (*Carnegiea gigantea*, *Parkinsonia* spp., *Ferocactus* spp., *Fouqueria splendens*, *Acacia greggii*, and *Olneya tesota*); >95 yrs
	Pinyon-Juniper **1019**
A	***Early***: 5-20% herbaceous cover; 0-9 yrs
B	***Mid1-open***: 11-20% cover big sage or black sage <1.0m; 10-40% herbaceous cover; 10-29 yrs
C	***Mid2-open***: 11-30% cover of pinyon and/or juniper <5m; 10-40% shrub cover; <20% herbaceous cover; 30-99 yrs
D	***Late-open***: old growth, 31-50% cover of pinyon and/or juniper <5m-9m; 10-40% shrub cover; <20% herbaceous cover; >99 yrs
U-AG	***Annual-Grass***: 5-30% cheatgrass cover; <10% shrub cover
U-TA	***Tree-Annual-Grass***: 31-50% cover of pinyon and/or juniper <5m-9m; 10-40% shrub cover; <20% cheatgrass cover
	Ponderosa Pine **1054**
A	***Early***: 0-60% cover of shrub/grass; conifer seedlings can be abundant <5m; 0-39yrs;
B	***Mid-closed***: 31-60% cover of ponderosa pine, Douglass-Fir, and white fir 5-10m; dense shrub cover possible; 40-159yrs
C	***Mid-open***: 10-30% cover of ponderosa pine (dominant), Douglass-Fir, and limber pine 5-10m; abundant shrub and grass cover; 40-159yrs
D	***Late-open***: 10-30% cover of ponderosa pine (dominant), Douglass-Fir, and limber pine 11--50m; abundant shrub and grass cover; >160 yrs
E	***Late-closed***: 31-80% cover of ponderosa pine, Douglass-Fir, and limber pine 11-50m; mountain snowberry common; >160 yrs
U-AG	***Annual-Grass***: >10% cheatgrass cover; trees largely absent; charred logs or standing dead trees often present; native grasses and forbs present to abundant
U-TA	***Tree-Annual-Grass***: 10-80% cover of young and older ponderosa pine and other conifer; >5% cheatgrass cover; native grass and shrubs present to abundant
	Semi-Desert Grassland **1135**
A	***Early***: 10-40% cover of grasses (Indian ricegrass and desert needlegrass, and in the Mojave Desert big galleta and bush muhly); <5% shrub cover (spiny menadora); 0-20 yrs
B	***Mid-closed***: >25% cover of grasses (Indian ricegrass and desert needlegrass, and in the Mojave Desert big galleta and bush muhly); 5-25% shrub cover (spiny menadora); 20+ yrs
U-DP	***Depleted***: 5-30% shrub cover; <10% cover of grasses; 10-30% bare ground cover

Class Code	Class abbreviation and brief description
U-ES	***Early-Shrub***: 10-30% cover of rabbitbrush; 10-30% bare ground cover; <10% native grass cover
U-SAP	***Shrub-Annual-Grass-Perennial-Grass***: 5-30% shrub cover; 5-15% cover of annual grasses; native grasses may be present to common
	Spruce-Fir **1056**
A	***Early***: 0-100% cover of Engelman spruce seedling/shrub/grass <5m; 0-39 yrs
B	***Mid-closed***: 40-100% cover of Engelman spruce and aspen 5-24m; 40-129yrs
C	***Mid-open***: 0-40% cover of Engelman spruce 5-24m pole size; ; 40-129yrs
D	***Late-closed***: 40-100% cover of Engelman spruce 25-49m; >129 yrs
	Subalpine Riparian **1160**
A	***Early***: 0-50% cover of willow, <3m; large patches of basin wildrye, sedges, and tufted grasses; 0-2 yrs
B	***Mid-open***: 10-30% cover of mixed conifers 0-5m; aspen and willow abundant; large patches of basin wildrye, sedges, and tufted grasses; 3-22 yrs
C	***Late-closed***: 31-50% cover of mixed conifers 5-10m; aspen and willow abundant; >22 yrs
U-EF	***Exotic-Forbs***: >5% of thistle or other exotic forbs (tall whitetop, Russian knapweed, purple loosestrife); native woody shrubs and trees present to abundant; graminoids dominated patches may be presernt
	Warm Desert Riparian (WDR) **11550**
A	***Early***: 10-50% cover of Gooding willow and Fremont Cottonwood seedlings and shrubs; riparian and wetland graminoids may co-dominate; 0-4 yrs post-flooding
B	***Mid-closed***: 51-100% cover of willow and small trees (willow and cottonwood) <3 m; patches of graminoids and halophytic shrubs common; 5-19 yrs after flooding
C	***Mid-open***: 11-50% cover of fire resprouts of mesquite and Gooding willow; patches of graminoids frequent after fire; mesquite mature to larger trees several years after fire; 1-89 yrs after fire
D	***Late1-closed***: 51%-90% of mature Gooding willow and Fremont cottonwood; patches of graminoids in saturated soils and of halophytic shrubs on drier sediment deposits or more saline surfaces; 10-89 yrs
E	***Late2-closed***: 51-90% mesquite cover; Gooding willow and Fremont cottonwood minor component; understory often dominated by graminoids and forbs; >90 yrs
U-DE	***Desertified*:** incised river bank caused by human disturbance; 10-90% native halophytic shrub or riparian tree cover; graminoid patches may be present
U-EF	***Exotic Forb***: >5% exotic forb species regardless of native cover; river bank not incised
U-ET	***Exotic-Tree***: >5% exotic tree species (tamarisk or Russian olive) regardless of native cover; river bank not incised
U-DEF	***Desertified-Exotic-Forb***: >5% exotic forb species regardless of native cover; river bank incised
U-DET	***Desertified-Exotic-Tree***: >5% exotic tree species (tamarisk or Russian olive) regardless of native cover; river bank incised

Class Code	Class abbreviation and brief description
	Washes **11551**
A	***Early***: 20-50% cover may be gravel, sands, and/or flood debris; 10-19% cover of shrubs (species varies between southern and northern Nevada: desert almond, burrobrush, rabbitbrush, creosotebush, desert willows present); 5-15% cover of grasses (species varies between southern and northern Nevada); 0-5 yrs
B	***Mid-closed:*** 20-50% cover of shrubs (species varies between southern and northern Nevada: desert almond, bursage, burrobrush, creosotebush, Anderson's wolfberry, rabbitbrush); 5-10% cover of grasses (species varies between southern and northern Nevada); <30% of gravel and rocks; 5-19 yrs
C	***Late-closed***: 30-50% cover of shrubs (species varies between southern and northern Nevada: bursage, burrobrush, creosotebush, Anderson's wolfberry, rabbitbrush, mesquite); Joshua tree may be present in southern Nevada; 5-10% cover of grasses (species varies between southern and northern Nevada), <10% of gravel and rocks; >20 yrs
U-ET	***Exotic-Tree*****:** >5% cover of salt cedar; 0-50% cover of shrubs
	Wyoming Big Sagebrush (8-10 inch precipitation zone) **10800**
A	***Early***: 20-40% herbaceous cover; <10% cover of rabbitbrush species and Wyoming big sagebrush; 0-19 yrs
B	***Mid-open***: 11-20% cover Wyoming big sagebrush; 10-40% herbaceous cover; 20-59 yrs
C	***Late-closed****:* 20-40% cover of Wyoming big sagebrush; <20% native herbaceous cover; 60-99 yrs
U-AG	***Annual-Grass***: 10-40% cover of cheatgrass; <10% shrub cover
U-ES	***Early-Shrub***: 20-50% cover rabbitbrush species
U-SAP	***Shrub-Annual-Grass-Perennial-Grass***: 10-30% Wyoming big sagebrush <0.5m, if >5% native grass cover, then >5% cover cheatgrass or if ≤5% native grass cover, then 0-20% cheatgrass cover; >10 yrs
U-TA	***Tree-Annual-Grass***: 11-60% cover of trees 5-9m; <20% cheatgrass cover; >125 yrs

Appendix III: Description of ecological model dynamics for the Wildlife Action Plan.

Introduction

Non-spatial state-and-transition models of ecological systems are created with the software PATH and Vegetation Dynamics Development Tool (VDDT from ESSA Technologies, Ltd.; Barrett 2001; Beukema et al. 2003). Although PATH is the general architecture of the simulation, VDDT is "called in" by PATH to perform runs. (The latest version, PATH 4.0.11, does not anymore require VDDT.) In VDDT, succession and disturbance are simulated in a semi-Markovian framework. Each vegetation state has one possible deterministic transition based on time in the state (usually succession) and several possible probabilistic transitions (natural and management). Each of these transitions has a new destination state and probability associated with it. Based on the timing of the deterministic transition and the probabilities of the stochastic transitions, at each time step a polygon may remain the same, undergo a deterministic transition based on elapsed time in the current state or undergo a probabilistic transition based on a random draw (for example, replacement fire).

Thirty-four state-and-transition models were created for each of the ecological systems in Table 3. Appendix II presents the different states, phases, and their abbreviations for each ecological system. Although each model represents a distinct ecological system, some models are grouped on the same VDDT project page (i.e., Uber model) to allow for seamless system conversions for climate change analysis (this is not necessary in the latest PATH platform; see Tables 4 & 5):

All models have at their core the LANDFIRE reference condition represented by some variation around the A-B-C-D-E classes (Appendix II). Essentially, this means that models have an early development class and mid-development and/or late-development classes. Mid- and late-development classes may be expressed as open or closed canopy. Several models contained <5 boxes that do not follow the classic nomenclature. The A-E class models simply represent succession from usually herbaceous vegetation to increasing woody species dominance where the dominant woody vegetation might be shrubs or trees. For the models to also reflect the effects of management, we add uncharacteristic vegetation classes that represent different states that only exist because of direct or indirect human activity (Appendix II).

In all models, any disturbance is quantified by a rate expressed as a probability per year. This rate is the inverse of the return interval of a disturbance or a frequency of spatial events. For example, a mean fire return interval of 100 years is equal to a rate of 0.01/year (0.01 = 1/100). The probability/year rate is used in VDDT because it has the very convenient property of being additive, whereas return intervals are not additive. This rate is further multiplied by a proportion that partitions the main rate in terms of success and failure outcomes, allocation of resources to realize different management objectives, or extent of application (for example, 5% of the biophysical setting was grazed at a rate of 1.0/year – (livestock grazed every year, thus the return interval is 1 year). The rate that is ultimately used is the probability/year multiplied by proportions of allocation. Any rate, which is generally based on return intervals, is converted to a spatial draw per year as a necessary time for space substitution. Although VDDT is non-spatial simulation software, the underlying process imitates temporal rates with virtual pixel draws. To pursue the fire return interval example, a probability/year of 0.01 means that 1 out of every 100 pixels on average receives fire within a year. Temporal multipliers described in the main text can be used to modify how many pixels are selected per year while maintaining a temporal average rate of 0.01/year (see main text).

Models contain more management activities than are actually employed in final simulations to explore possibilities with workshop participants. The rate of application of each management action was set by Treatment Details in PATH or area limit function of VDDT that is reflective of management

budgets and minimum treatments required to achieve objectives. Because area limits overrule rates, we generally use a default rate of 0.01 for all actions –another arbitrary rate could have been chosen; however, the proportional allocation of the area limit to different outcomes of the same management action is controlled by PATH entries. Some outcomes represent failure rates for an action, such as when a plant seeding fails and is replaced by a non-native annual species.

The format of model descriptions that follow will consist of a standard template of entries by ecological system (alphabetical order). Some entries will be repetitive among ecological systems and with Appendix II. Each ecological system's model is intended to be self-contained.

Alpine (ALP) 1144

Area of Application and Context:

- **Wildlife Action Plan.**
- **No livestock grazing or limited by season of use.**
- **Naturally full fire suppression.**
- **Date created: 2011**

Vegetation classes:

- *A-**Early***: 0-10% cover of graminoids; <90% soil cover; 0-2 yrs
- *B-**Late-closed**:* >11% cover of graminoids and forbs; <10% cover of low shrubs; >2 yrs
- U-*None*

Reference Condition:

- **Natural Range of Variability**
  - *A-**Early**:* 2%
  - *B-**Late-closed**:* 98%
  - U*:* 0%

Succession:

Succession is simple in this two-box model:

- *Early-succession* to *late-succession closed*: 2 years

Natural Disturbances:

Four natural disturbances and one climate change conversion apply to the alpine biophysical setting:

- *Snow-deposition* slows succession only in the *early-succession* class (*ALP-A*) under the assumption that a thicker than normal and slowly melting snow banks kill or severely thin vegetation. A rate of 0.01/year is arbitrarily assumed.
- *Drought* thins the late-succession class (*ALP-B*) back to age 3 under the assumption than alpine vegetation is not normally water limited. A *drought* return interval rate of every 178 years (a rate of 0.0056/year) is used based on the frequency of severe drought intervals estimated by Biondi *et al*. (2007) from 2,300 years of western juniper (*Juniperus occidentalis)* tree ring data from the Walker River drainage of eastern California and western Nevada. Although we recognize that droughts may be more common than every 178 years, severe droughts, which are >7-year drought events with consecutive far-below average soil moisture (narrow tree rings), kill naturally drought resistant species.
- *Replacement fire* is caused by and limited to the area of lightning strikes. Because fire is very rare in the alpine, a small arbitrary rate of 0.0001/year or 1 pixel hit out of 10,000 is chosen.

- The *avalanches* disturbance is a stand-replacing event that occurs in both vegetation classes and is most prevalent during the wettest El Nino years (every 7+ years or 0.013/year). We assume that only 5% of the area where snow accumulates will experience avalanches due to topography.
- *Climate change conversion* (*CC-Conversion*) occurs at a rate of 0.0012/year and is achieved by both vegetation classes being colonized by limber or bristlecone pines (thus becoming the Limber-Bristlecone Pine BpS).

Literature from LANDFIRE Model Tracker:

Baker, W. L. 1980. Alpine vegetation of the Sangre De Cristo Mountains, New Mexico: Gradient analysis and classification. Unpublished thesis, University of North Carolina, Chapel Hill. 55 pp.

Bamberg, S. A. 1961. Plant ecology of alpine tundra area in Montana and adjacent Wyoming. Unpublished dissertation, University of Colorado, Boulder. 163 pp.

Bamberg, S. A., and J. Major. 1968. Ecology of the vegetation and soils associated with calcareous parent materials in three alpine regions of Montana. Ecological Monographs 38(2):127-167.

Biondi, F., Kozubowski. T.J., Panorska, A.K., and L. Saito. 2007. A new stochastic model of episode peak and duration for eco-hydro-climatic applications. Ecological Modelling 211:383-395.

Cooper, S. V., P. Lesica, and D. Page-Dumroese. 1997. Plant community classification for alpine vegetation on Beaverhead National Forest, Montana. USDA Forest Service, Intermountain Research Station, Report INT-GTR-362. Ogden, UT. 61 pp.

Komarkova, V. 1976. Alpine vegetation of the Indian Peaks Area, Front Range, Colorado Rocky Mountains. Unpublished dissertation, University of Colorado, Boulder. 655 pp.

Komarkova, V. 1980. Classification and ordination in the Indian Peaks area, Colorado Rocky Mountains. Vegetation 42:149-163.

Schwan, H. E., and D. F. Costello. 1951. The Rocky Mountain alpine type: Range conditions, trends and land use (a preliminary report). Unpublished report prepared for USDA Forest Service, Rocky Mountain Region (R2), Denver, CO. 18 pp.

Thilenius, J. F. 1975. Alpine range management in the western United States--principles, practices, and problems: The status of our knowledge. USDA Forest Service Research Paper RM-157. Rocky Mountain Forest and Range Experiment Station, Fort Collins, CO. 32 pp.

Willard, B. E. 1963. Phytosociology of the alpine tundra of Trail Ridge, Rocky Mountain National Park, Colorado. Unpublished dissertation, University of Colorado, Boulder.

State-and-Transition Model (cropped):

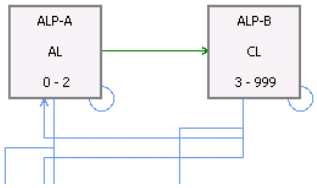

Aspen-Mixed Conifer (ASM) 1061

Area of Application and Context:

- **Nevada Wildlife Action Plan.**
- **Livestock grazing varies among regions.**
- **Generally full fire suppression management.**
- **Date created: 2011**

Vegetation classes:

A- ***Early***: 5-100% cover aspen <5m; mountain snowberry and *ribes* common; 0-19 yrs
*B-****Mid1-closed***: 40-99% cover aspen <5-10m; mountain snowberry and *ribes* common; 11-39 yrs
*C-****Mid2-closed***: 40-99% cover aspen 10-24m; conifer saplings visible in mid-story; mountain snowberry and *ribes* common; 40-79 yrs
*D-****Late1-open***: 10-39% cover aspen 10-25 m; 0-25% mixed conifer cover 5-10 m; mountain snowberry and *ribes* common; >80 yrs
*E-****Late1-closed***: 40-80% cover of mixed conifer 10-50m; <40% cover of aspen 10-25m; mountain snowberry and *ribes* present; >100 yrs
MC-E- Conversion to Mixed Conifer, Limber-Bristlecone Pine, or Spruce-Fir; 35-90% cover of mixed conifers 10-49m; mountain snowberry and *ribes* present; conifer litter abundant

Reference Condition:

- **Natural Range of Variability**

	Mojave	Calc., Lah., Walk.	Elko	Eastern Sierra Nevada
*A-****Early***	12%	17%	19%	10%
*B-****Mid1-closed***	34%	44%	45%	48%
*C-****Mid2-closed***	26%	25%	26%	26%
*D-****Late-open***	15%	5%	5%	6%
*E-****Late-closed***	13%	9%	6%	10%
U	0%	0%	0%	0%

Succession:

Succession follows the 5-box pathway with vegetation starting as dense resprouting aspen and ending with dominance of white fir, Douglas-fir, Engelmann spruce, or subalpine fir (conifer species composition regionally varies) and co-dominance of aspen. Throughout succession, the shrub and herbaceous understory is very diverse. The succession pathway is not entirely deterministic as we use the probabilistic *alternate-succession* disturbance to cause a transition from the late-succession open (*ASM-D*) to the late-succession closed (*ASM-E*) class. This rate of transition is 1/year and starts at age 80 years conditional of the *Time-Since-Disturbance* function that allows transition between these classes only if a pixel has not experienced any fire for 100 years. Deterministic succession transitions occur at the following ages:

- *Early-succession* to *mid1-succession closed*: 9 years
- *Mid1-succession closed* to *mid2-succession closed*: 39 years
- *Mid2-succession closed* to *late-succession open*: 79 years
- *Late-succession open* to *late-succession closed*: ≥80 years conditional on *Time-Since-Disturbance* = 100 years (probabilistic)

Natural Disturbances:

Fire is the primary stochastic disturbance. *Replacement fire* is set at a mean return interval of 50 years (0.02/year; the mean fire return interval of montane sagebrush steppe surrounding most aspen patches) and restarts the succession clock to age zero within the reference condition, which is labeled the *early development* or *BPS-A* class (a phase of the reference condition).

- *Replacement fire* affects the following classes: *mid1-succession closed* (*ASM-B*) and 90% of times the *late-succession closed* (*ASM-D*).
- *Mixed severity fire* is a combination of stand-replacing fire 75% of times and thinning fire 25% of times in the *mid2-succession closed* class (*ASM-C*).
- Low severity thinning fire is assumed to kill young conifers, several aspen trees, but not change the age of the majority of the trees.
- *Mixed severity fire* is also present in the *late-succession closed* class (*ASM-D*) as the remaining 10% of the *replacement fire*. This fire is fueled by more conifer fuel and thinsthe pixel to the previous succession phase.

The most widespread natural disturbance is *avalanches*, which obliterates every vegetation classes back to the beginning of succession. The rate for *avalanches* is not data supported but inferred from a 7-year El Nino cycle for heavier snow deposition (0.013 ≈ 1/7+) multiplied by a proportion of 5% to represent the proportion of this biophysical setting at risk of avalanches. In reality, we recognize that the proportion of area prone to avalanches will substantially vary among landscapes and regions. The total rate, therefore, is 0.13/year × 0.05 = 0.0065/year.

Another widespread natural disturbance is *insect/disease outbreaks* that cause stand replacing events (generally 20% of times) or stand thinning (80% of times). In the case of aspen and mixed conifer, *insect/disease outbreak* is used because it plays a distinctive role that is more prominent than *drought* for natural resource managers. The *insect/disease outbreak* return interval rate varies between the two classes where it appears. Older aspen trees are first affected by the *insect/disease* disturbance in the *mid2-succession closed* class (*ASM-C*) at a rate of 0.005/year (1/200 years) using the proportions above with thinning to the previous succession classes. The nature of the *insect/disease outbreak* disturbance changes for conifers when they age in the *late-succession closed* class (*ASM-E*), i.e., it makes no difference what happens to aspen trees. The rate in this older class is therefore that of the mixed conifer biophysical setting at 0.003/year (1/333 years), a rate obtained from U.S. Forest Service forestry experts at the Dixie National Forest in western Utah.

Wild ungulate grazing includes deer foraging (primarily) and elk impacts to aspen systems. This herbivory's effects vary with succession phases. For the *early-succession* class (*ASM-A*), during which aspen resprouts are sensitive to intense browse, we assume a generic rate of 0.01/year of which 5% causessuccession to start over (age = 0), because of intense herbivory, and 95% is relatively unaffected by *wild ungulate grazing*. *Wild ungulate grazing* is deemed unimportant in the

mid1-succession class (*ASM-B*) because of full aspen vigor, but becoming significant enough in the *mid2-succession* class (*ASM-C*) to cause a reversal succession to the previous class at a very low rate of 0.001/year. *Wild ungulate grazing* persists in the *late-succession* classes (*ASM-D* and *ASM-E*) by accelerating conifer dominance by 10 years when pixels are selected (in VDDT jargon: RelAge = +10).

Aspen-mixed conifer (all aspen biophysical settings) has unique dynamics that lead to the loss of clones (*Losing Clone*). With lack of fire or other disturbances that removes conifers, or persistent excessive herbivory that kills resprouts, aspen becomes dominated by mixed conifers. Continued dominance by conifers eventually results in death of the clone and a permanent establishment of mixed conifer, limber-bristlecone, or spruce-fir. The *losing clone* disturbance, therefore, is a permanent vegetation conversion disturbance to the mixed conifer, limber-bristlecone pine, or spruce-fir biophysical setting set at a rate of 0.02/year activate from succession age 250 to 300 years. The important assumption is that clones can persist in a suppressed condition for at least 100 years past the normal age of tree senescence (~125 years); therefore clones are assumed to persist until 250 years, an arbitrary deadline that allows for ample variation in aspen persistence. After 250 years, clones are lost at a uniform rate of 0.02/year (1 pixel per every 50 pixels per year). This rate insures that all clones are converted to the mixed conifer, limber-bristlecone, or spruce-fir biophysical setting during the last 50 years (from ages 250 to 300).

Literature Cited in LANDFIRE Model Tracker:

Baker, F. S., 1925. Aspen in the Central Rocky Mountain Region. USDA Department Bulletin 1291 pp. 1-47.

Bartos, D. L. 2001. Landscape Dynamics of Aspen and Conifer Forests. Pages 5-14 in: Shepperd, W. D.; Binkley, D.; Bartos, D. L.; Stohlgren, T. J.; and Eskew, L. G., compilers. 2001. Sustaining aspen in western landscapes: symposium proceedings; 13-15 June 2000; Grand Junction, CO. Proceedings RMRS-P-18. Fort Collins, CO: U.S. Department of Agriculture, Forest Service, Rocky Mountain Research Station. 460 p.

Bartos, D. L. and R. B. Campbell, Jr. 1998. Decline of Quaking Aspen in the Interior West – Examples from Utah. Rangelands, 20(1):17-24.

Biondi, F., Kozubowski. T.J., Panorska, A.K., and L. Saito. 2007. A new stochastic model of episode peak and duration for eco-hydro-climatic applications. Ecological Modelling 211:383-395.

Campbell, R. B. and Bartos, D. L. 2001. Objectives for Sustaining Biodiversity. In: Shepperd, W. D., D. Binkley, D. L. Bartos, T. J. Stohlgren, and L. G. Eskew, compilers. 2001. Sustaining aspen in western landscapes: symposium proceedings; 13-15 June 2000; Grand Junction, CO. Proceedings RMRS-P-18. Fort Collins, CO: U.S. Department of Agriculture, Forest Service, Rocky Mountain Research Station. 460 p.

Bradley, A. E., Noste, N. V., and W. C. Fischer. 1992. Fire Ecology of Forests and Woodlands in Utah. GTR-INT-287. Ogden, UT. U.S. Department of Agriculture, Forest Service, Intermountain Research Station. 128 p.

Bradley, A. E., W. C. Fischer, and N. V. Noste. 1992. Fire Ecology of the Forest Habitat Types of Eastern Idaho and Western Wyoming. GTR- INT-290. Ogden, UT. U.S. Department of Agriculture, Forest Service, Intermountain Research Station. 92.

Brown, J. K. and D. G. Simmerman. 1986. Appraisal of fuels and flammability in western aspen: a prescribed fire guide. General technical report INT-205. Ogden, UT: U.S. Department of Agriculture, Forest Service, Rocky Mountain Research Station.

Brown, J. K., K. Smith, J. Kapler, eds. 2000. Wildland fire in ecosystems: effects of fire on flora. Gen. Tech. Rep. RMRS-GTR-42-vol. 2. Ogden, UT: U.S. Department of Agriculture, Forest Service, Rocky Mountain Research Station. 257 p.

Campbell, R. B. and , D. L. Bartos. 2001. Objectives for Sustaining Biodiversity. In: Shepperd, W. D., D. Binkley, D. L. Bartos, T. J. Stohlgren, and L. G. Eskew, compilers. 2001. Sustaining aspen in western landscapes: symposium proceedings; 13-15 June 2000; Grand Junction, CO. Proceedings RMRS-P-18. Fort Collins, CO: U.S. Department of Agriculture, Forest Service, Rocky Mountain Research Station. 460 p.

Brown, J. K. and D. G. Simmerman. 1986. Appraisal of fuels and flammability in western aspen: a prescribed fire guide. General technical report INT-205. Ogden, UT: U.S. Department of Agriculture, Forest Service, Rocky Mountain Research Station.

Debyle, N. V., C. D. Bevins, and W. C. Fisher. 1987. Wildfire occurrence in aspen in the interior western United States. Western Journal of Applied Forestry. 2:73-76.

Kay, C. E. 1997. Is aspen doomed? Journal of Forestry 95: 4-11.

Kay, C. E. 2001a. Evaluation of burned aspen communities in Jackson Hole, Wyoming. Proceedings RMRS-P-18. Fort Collins, CO: U.S. Department of Agriculture, Forest Service, Rocky Mountain Research Station. 8 p.

Kay, C. E. 2001b. Long-term aspen exclosures in the Yellowstone ecosystem. Proceedings RMRS-P-18.. Fort Collins, CO: U.S. Department of Agriculture, Forest Service, Rocky Mountain Research Station. 15 p.

Kay, C. E. 2001c. Native burning in western North America: Implications for hardwood forest management. General Technical Report NE-274. U.S. Department of Agriculture, Forest Service, Northeast Research Station. 8 p.

Mueggler, W. F. 1988. Aspen Community Types of the Intermountain Region. USDA Forest Service, General Technical Report INT-250. 135 p.

Mueggler, W. F. 1989. Age Distribution and Reproduction of Intermountain Aspen Stands. Western Journal of Applied Forestry, 4(2):41-45.

Romme, W. H, L. Floyd-Hanna, D. D. Hanna ,and E. Bartlett. 2001. Aspen's ecological role in the west. U.S. Department of Agriculture, Forest Service, Rocky Mountain Research Station, RMRS Proceedings-P-18. Pages 243-259.

Shepperd, W. D. and E. W. Smith. 1993. The role of near-surface lateral roots in the life cycle of aspen in the central Rocky Mountains. Forest Ecology and Management 61: 157-160.

Shepperd, W. D. 2001. Manipulations to Regenerate Aspen Ecosystems. Pages 355-365 in: Shepperd, W. D., D. Binkley, D. L. Bartos, T. J. Stohlgren, and L. G. Eskew, compilers. 2001. Sustaining aspen in western landscapes: symposium proceedings; 13-15 June 2000; Grand Junction, CO. Proceedings RMRS-P-18. Fort Collins, CO: U.S. Department of Agriculture, Forest Service, Rocky Mountain Research Station. 460 p.

Shepperd, W. D., D. L. Bartos, and A. M. Stepen. 2001. Above- and below-ground effects of aspen clonal regeneration and succession to conifers. Canadian Journal of Forest Resources; 31: 739-745.

USDA Forest Service. 2000. Properly Functioning Condition: Rapid Assessment Process (January 7, 2000 version). Intermountain Region, Ogden, UT. Unnumbered.

Welsh, S. L, N. D. Atwood, S. l. Goodrich, and L. C. Higgins. 2003. A Utah Flora, Third edition, revised. Print Services, Brigham Young University, Provo, UT. 912 p.

State-and-Transition Model (cropped):

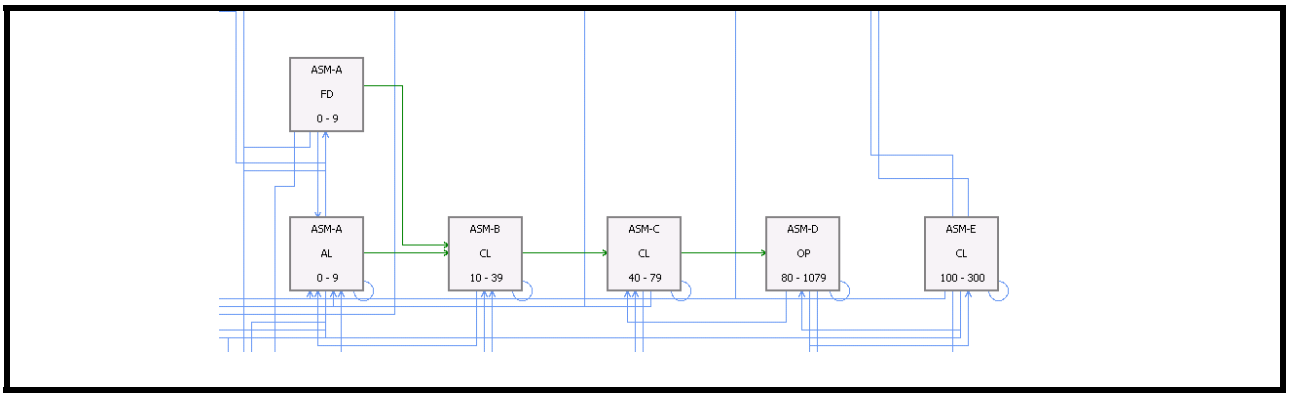
ASM-A
FD
0 - 9
ASM-A
AL
0 - 9
ASM-B
CL
10 - 39
ASM-C
CL
40 - 79
ASM-D
OP
80 - 1079
ASM-E
CL
100 - 300

Aspen Woodland (ASP) 1011

Area of Application and Context:

- **Nevada Wildlife Action Plan**
- **Livestock grazing varies by region**
- **Generally full fire suppression**
- **Date created: 2011**

Vegetation classes:

- *A-**Early***: 5-100% cover of aspen <5m tall; 0-9 yrs
- *A-FD*: ***Early-Fenced***: 5-100% cover of aspen <5 m tall; 0-9 years; fenced (therefore, non-mappable)
- *B-**Mid1-closed:*** 40-99% cover of aspen <5-10m; dense herbaceous and non-sagebrush shrub understory and midstory; 10-39 yrs
- *C-**Late1-closed***: 40-99% cover of aspen 10-25m; few conifers in mid-story; dense herbaceous and non-sagebrush shrub understory and mid-story; >39 yrs
- *D-**Late1-open***: 10-39% cover of aspen 10-25 m; 0-25% conifer cover 10-25 m; moderately dense herbaceous and non-sagebrush shrub understory and mid-story; >99 yrs
- *U-DP-open*: ***Depleted:*** 10-39% cover of older aspen 10-25m; no or little aspen regeneration; few conifers in mid-story; sparse understory and sagebrush often present
- *U-FD: **Depleted-Fenced*** (therefore non-mappable): 10-39% cover of older aspen 10-25m; no or little aspen regeneration; few conifers in mid-story; sparse understory and sagebrush often present

Reference Condition:

- **Natural Range of Variability**

	All regions except E. Sierra NV	E. Sierra NV
*A-**Early***	20%	12%
*B-**Mid-closed***	46%	51%
*C-**Late-closed***	25%	28%
*D-**Late-open***	9%	9%
U	0%	0%

Succession:

Succession follows the 4-box pathway with vegetation starting as dense resprouting aspen and ending as a woodland of older aspen and an opening canopy. Throughout succession the shrub and herbaceous understory is very diverse. The succession pathway is not entirely deterministic as we use the

probabilistic *alternate-succession* disturbance to cause a transition from the *late-succession closed* class (*ASM-C*) to the *late-succession open* class (*ASM-D*). This rate of transition is 0.33/year and starts at age 40 years conditional of the *Time-Since-Disturbance* function that allows transition between these classes only if a pixel has not experience any fire for 100 years. Deterministic succession transitions occur at the following ages:

- Early to mid1-succession closed: 9 years
- Mid1-succession closed to mid2-succession closed: 39 years
- Mid2-succession closed to late-succession open: >40 years conditional on *Time-Since-Disturbance* = 100 years (probabilistic).

Natural Disturbances:

Fire is the primary stochastic disturbance and restarts the succession clock to age zero within the reference condition, which is labeled the *early-succession* class or *BPS-A*. It is assumed that fire is all from importation from surrounding montane sagebrush steppe (a mean fire return interval of ~50 years) because most aspen woodlands are patchy and adjacent to sagebrush. *Replacement fire* is set at a mean return interval of 50 years (0.02/year) in all vegetation classes, except for the *late-succession open* class (*ASP-D*), where it is 55 years (0.018/year). Replacement fire that occurs in *uncharacteristic-depleted (ASP-U:DP)* or *uncharacteristic-fenced (ASP-U:FD)* classes causes these classes to convert to *big sagebrush upland (BSu-A)* or *montane sagebrush mountain (MSm-A)* for 15% of the burned area because the clones are considered brittle. The pathways to both sagebrush biophysical settings exist because aspen woodlands are found at subalpine and montane elevations. Mixed fire sends the *late-succession open* class (*ASP-D*) back to the *late-succession closed class (ASP-C)* at a low rate of 0.002/year that assumes partial resprouting of aspen and the release of suppressed vegetation.

The most widespread natural disturbance is *avalanches*, which obliterates every vegetation classes back to the beginning of succession. The rate for *avalanches* is not data supported but inferred from a 7-year El Nino cycle for heavier snow deposition (0.013 ≈ 1/7+ years) multiplied by a proportion of 5% to represent the proportion of this biophysical setting at risk of avalanches. The total rate, therefore, is 0.13/year × 0.05 = 0.0065/year. In reality, we recognize that the proportion of area prone to avalanches will substantially vary among landscapes and regions. *Avalanches* convert the *depleted (ASP-U:DP)* and depleted-*fenced (ASP-U:FD)* classes, both of which contain brittle clones, to the *aspen early-succession* class *(ASP-A; 3% of area),* the big sagebrush upland *early-succession* class *(BSu-A; 1% of area),* and the montane sagebrush mountain *early-succession* class *(MSm-A; 1% of area)* at a mean return interval of 7 years.

The disturbance *insect/disease* is limited to the two older succession classes, the *depleted* class (DP), and the *depleted fenced* class *(FD)*. The *insect/disease* rate varies from 0.003/year (333 years return interval) to 0.005/year (200 years):

- The *depleted* class *(U-DP)* and the *fenced* class *(U-FD)* convert to the montane sagebrush-mountain *mid-succession open (MSm-B)* and *mid-succession closed (MSm-C)* classes, and to the *big sagebrush upland mid-succession open (BSu-B)* and *mid-succession closed (BSu-C)* classes at a mean return interval of 250 years 5% of the time.
- In the *late-succession closed* class (*ASP-C*), the *insect/disease* rate is 0.0055/year (182 years) and is partitioned between stand replacing events (20% of times) and stand thinning (80% of times), respectively, to the *aspen early-succession* class *(ASP-A)* and *aspen mid-succession closed* class

(ASP-B).

- In the *late-succession open* class (*ASP-D*), *insect/disease* is a pure stand thinning event to the previous succession class.
- The fate of aspen is more complicated in the *depleted* (*DP*) and *depleted-fenced (FD)* classes where trees and clones are more sensitive to disturbance:

  - 80% of times the disturbance causes a transition to the *early-succession* class (*ASP-A*);
  - 5% of times to the montane sagebrush steppe-mountain *mid-succession open* class (*MSm-B*) and 5% of the times to the montane sagebrush steppe-mountain biophysical setting *mid-succession closed* class (*MSm-C*), and
  - 5% of times to the big sagebrush-upland *mid-succession open* class (*BSu-B*); and
  - 5% of the time to the big sagebrush-upland biophysical setting *mid-succession closed* class (*BSu-C*). The transitions to uncharacteristic classes are permanent biophysical setting conversions.

Drought creates tree and shrub mortality under the assumption that prolonged and decreased soil moisture weakens plants that might ultimately be killed by insects or disease. Therefore, we do not double-count mortality. A *drought* return interval rate of every 178 years (a rate of 0.0056/year) is used based on the frequency of severe drought intervals estimated by Biondi *et al*. (2007) from 2,300 years of western juniper (*Juniperus occidentalis)* tree ring data from the Walker River drainage of eastern California and western Nevada. Although we recognize that droughts may be more common than every 178 years, severe droughts, which are >7-year drought events with consecutive far-below average soil moisture (narrow tree rings), kill naturally drought resistant shrubs and trees. Drought only seems to affect the uncharacteristic *depleted (DP)* and *fenced (FD)* classes. Drought effects are somewhat complicated in these classes:

- Twelve percent returns to the *early-closed succession* class *(ASP-A),*
- Pixels convert equally (22%) to the montane sagebrush steppe-mountain *mid-succession open* class (*MSm-B*), montane sagebrush steppe-mountain biophysical setting *mid-succession closed* class (*MSm-C*), big sagebrush-upland *mid-succession open* class (*BSu-B*), and big sagebrush-upland biophysical setting *mid-succession closed* class (*BSu-C*).

Wild ungulate grazing includes deer foraging (primarily) and elk impacts to aspen systems. The effects of this herbivory vary with succession phases. *Wild ungulate grazing* was judged more important in the *early-succession* (*ASP-A*) than the other classes and absent in the *mid-succession closed* class (*ASP-B*) due to full aspen vigor. Heavy browse will reset succession to age zero in the *early-succession* class (*ASP-A*) for 90% of the pixels (spatial rates are more important than return intervals for herbivory as wildlife browsing occurs every year), whereas the same browse will cause a rare and equal loss of the clone to the montane sagebrush steppe-mountain *early-succession* class (*MSu-A*) and big sagebrush-upland *early-succession* class *(BSu-A)*.

Aspen (all aspen biophysical settings) has unique dynamics that lead to the loss of clones (*Losing Clone*). With lack of fire or other disturbances that cause resprouting, aspen clones in the *late-succession open* class (*ASP-D*) substantially open up and 100% of the class transitions to the *depleted* class *(DP),* becomes encroached by mountain big sagebrush, and is highly vulnerable to permanent loss of the clone. The *losing clone* disturbance, therefore, is the beginning of permanent vegetation conversion set at a rate of 0.02/year activated from age 250 to 300 years. The important assumption is that clones can persist in a suppressed condition for a hundred of years past the

normal age of tree senescence (~125 years), but then clones are loss at a uniform rate of 1/50 or 50 years. When a clone is lost, the vegetation converts equally to the montane sagebrush steppe-mountain *mid-succession open* class (*MSm-B*), montane sagebrush steppe-mountain *mid-succession closed* class (*MSm-C*), big sagebrush-upland *mid-succession open* class (*BSu-B*), and big sagebrush-upland *mid-succession closed* class (*BSu-C*).

Climate change conversion (*CC-Conversion*) occurs at a rate that varies across Nevada from 0.13/year on the Columbia Plateau to 0.03/year on the Great Basin. The *early-succession* class (*ASP-A*) transitions to both the big sagebrush steppe *early open succession class (BSS-A)* and big sagebrush-upland *early open class (BSu-A)*.

Literature cited in LANDFIRE's Model Tracker:

Baker, F. S., 1925. Aspen in the Central Rocky Mountain Region. USDA Department Bulletin 1291 pp. 1-47.

Bartos, D. L. 2001. Landscape Dynamics of Aspen and Conifer Forests. Pages 5-14 in: Shepperd, W. D.; Binkley, D.; Bartos, D. L.; Stohlgren, T. J.; and Eskew, L. G., compilers. 2001. Sustaining aspen in western landscapes: symposium proceedings; 13-15 June 2000; Grand Junction, CO. Proceedings RMRS-P-18. Fort Collins, CO: U.S. Department of Agriculture, Forest Service, Rocky Mountain Research Station. 460 p.

Bartos, D. L. and R. B. Campbell, Jr. 1998. Decline of Quaking Aspen in the Interior West – Examples from Utah. Rangelands, 20(1):17-24.

Biondi, F., Kozubowski. T.J., Panorska, A.K., and L. Saito. 2007. A new stochastic model of episode peak and duration for eco-hydro-climatic applications. Ecological Modelling 211:383-395.

Bradley, A. E., Noste, N. V., and W. C. Fischer. 1992. Fire Ecology of Forests and Woodlands in Utah. GTR-INT-287. Ogden, UT. U.S. Department of Agriculture, Forest Service, Intermountain Research Station. 128 p.

Bradley, Anne E., W. C. Fischer, and N. V. Noste. 1992. Fire Ecology of the Forest Habitat Types of Eastern Idaho and Western Wyoming GTR- INT-290. Ogden, UT. U.S. Department of Agriculture, Forest Service, Intermountain Research Station. 92.

Brown, J.K. and D.G. Simmerman. 1986. Appraisal of fuels and flammability in western aspen: a prescribed fire guide. General technical report INT-205. Ogden, UT: U.S. Department of Agriculture, Forest Service, Rocky Mountain Research Station.

Brown, J. K., K. Smith, J. Kapler, eds. 2000. Wildland fire in ecosystems: effects of fire on flora. Gen. Tech. Rep. RMRS-GTR-42-vol. 2. Ogden, UT: U.S. Department of Agriculture, Forest Service, Rocky Mountain Research Station. 257 p.

Campbell, R. B. and , D. L. Bartos. 2001. Objectives for Sustaining Biodiversity. In: Shepperd, W. D.; Binkley, D.; Bartos, D. L.; Stohlgren, T. J.; and Eskew, L. G., compilers. 2001. Sustaining aspen in western landscapes: symposium proceedings; 13-15 June 2000; Grand Junction, CO. Proceedings RMRS-P-18. Fort Collins, CO: U.S. Department of Agriculture, Forest Service, Rocky Mountain Research Station. 460 p.

Debyle, N.V., C.D. Bevins, and W.C. Fisher. 1987. Wildfire occurrence in aspen in the interior western United States. Western Journal of Applied Forestry. 2:73-76.

Kay, C. E. 1997. Is aspen doomed? Journal of Forestry 95: 4-11.

Kay, C. E. 2001a. Evaluation of burned aspen communities in Jackson Hole, Wyoming. Proceedings RMRS-P-18. Fort Collins, CO: U.S. Department of Agriculture, Forest Service, Rocky Mountain Research Station. 8 p.

Kay, C.E. 2001b. Long-term aspen exclosures in the Yellowstone ecosystem. Proceedings RMRS-P-18.. Fort Collins, CO: U.S. Department of Agriculture, Forest Service, Rocky Mountain Research Station.

15 p.
Kay, C.E. 2001c. Native burning in western North America: Implications for hardwood forest management. General Technical Report NE-274. U.S. Department of Agriculture, Forest Service, Northeast Research Station. 8 p.
Mueggler, W. F. 1988. Aspen Community Types of the Intermountain Region. USDA Forest Service, General Technical Report INT-250. 135 p.
Mueggler, W. F. 1989. Age Distribution and Reproduction of Intermountain Aspen Stands. Western Journal of Applied Forestry, 4(2):41-45.
Romme, W.H., Floyd, M.L, Hanna, D. and Barlett, E.J. 1999. Chapter 5: Aspen Forests in Landscape Condition Analysis for the South Central Highlands Section, Southwestern Colorado and Northwestern New Mexico.
Shepperd, W. D. 1990. A classification of quacking aspen in the central Rocky Mountains based on growth and stand characteristics. Western Journal of Applied Forestry 5:69-75.
Shepperd, W.D. and E.W. Smith. 1993. The role of near-surface lateral roots in the life cycle of aspen in the central Rocky Mountains. Forest Ecology and Management 61: 157-160.
Shepperd, W. D. 2001. Manipulations to Regenerate Aspen Ecosystems. Pages 355-365 in: Shepperd, Wayne D.; Binkley, Dan; Bartos, Dale L.; Stohlgren, Thomas J.; and Eskew, Lane G., compilers. 2001. Sustaining aspen in western landscapes: symposium proceedings; 13-15 June 2000; Grand Junction, CO. Proceedings RMRS-P-18. Fort Collins, CO: U.S. Department of Agriculture, Forest Service, Rocky Mountain Research Station. 460 p.
Shepperd, W. D., D. L. Bartos, and A. M. Stepen. 2001. Above- and below-ground effects of aspen clonal regeneration and succession to conifers. Canadian Journal of Forest Resources; 31: 739-745.
USDA Forest Service. 2000. Properly Functioning Condition: Rapid Assessment Process (January 7, 2000 version). Intermountain Region, Ogden, UT. Unnumbered.
Welsh, S. L, N. D. Atwood, S. l. Goodrich, and L. C. Higgins. 2003. A Utah Flora, Third edition, revised. Print Services, Brigham Young University, Provo, UT. 912 p.

State-and-Transition Model (cropped):

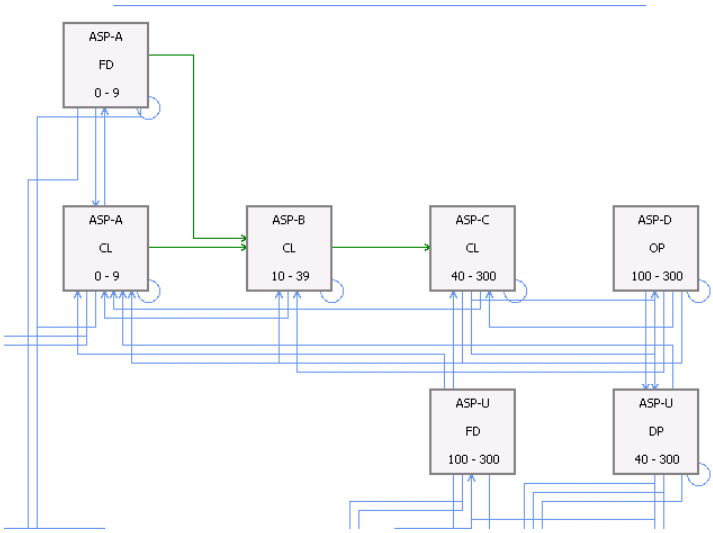

Big Sagebrush Steppe (BSS)

Area of Application and Context:

- **Nevada Wildlife Action Plan revision (absent from the Mojave Desert phytoregion)**
- **Livestock grazing**
- **Full fire suppression management**
- **Date created: 2011**

Vegetation classes:

- A- ***Early***: 20-80% grass (Idaho fescue, Thurber's needlegrass, bluebunch wheatgrass) and forb cover; 0-10% canopy of big sagebrush (mountain and Wyoming)/mountain brush; 0-12 yrs;
- B-***Mid-open*****:** 11-30% cover of big sagebrush (mountain and Wyoming)/mountain shrub; >50% grass (Idaho fescue, Thurber's needlegrass, bluebunch wheatgrass) and forb cover; 13-38 yrs;
- C-***Late-closed*****:** 31-50% cover of big sagebrush (mountain and Wyoming)/mountain brush; 25-50% herbaceous cover; <10% conifer sapling cover; 38+ yrs;
- U-*SAP:* ***Shrub-Annual-Perennial-Grass***: 21-50% cover of big sagebrush (mountain and Wyoming)/mountain brush; if native grass >5% cover, then >5% cover of cheatgrass or if native grass ≤5% cover, then 0-20% cheatgrass cover; <10% conifer sapling cover; >50 yrs
- U-*AG:* ***Annual Grass:*** 10-30% cover of cheatgrass; <10% shrub cover
- U-*TA:* ***Tree-Annual-Grass*****:** 20-80% conifer (pinyon, juniper, or montane conifer) cover; <5% shrub cover; if native grass >5% cover, then >5% cover of cheatgrass or if native grass ≤5% cover, then 0-20% cheatgrass cover; >140 yrs
- U-*SD:* ***Seeded (native)***: >10% cover of seeded herbaceous and/or shrub species, either native, introduced, and mixed native and introduced;<5% cheatgrass cover
- U-*ES:* ***Early shrub*****:** 20-50% cover rabbitbrush species

Reference Condition:

- **Natural Range of Variability**

	East Sierra, Calcareous, Lahontan, Walker	Elko
*A-**Early***	34%	31%
*B-**Mid-open***	49%	51%
*C-**Mid-closed***	17%	18%
U	0	0%

Succession:

Succession follows the 3-box pathway with vegetation starting as predominantly herbaceous and ending with sagebrush dominance.

- *Early-succession* to *mid-succession open*: 19 years
- *Mid-succession* open to *late-succession* closed: 59 years

Natural Disturbances:

Replacement fire restarts the succession clock at age zero within the reference condition, which is labeled the *early-succession* or *BSS-A* class. The mean return interval of *replacement fire* changes with vegetation classes:

- 120 years (0.0083/year) in the *early-succession* class (*BSS-A*);
- 75 years (0.013/year) in the *mid-succession open* class *(BSS-A)* and *late-succession closed* class (*BSS-C*); and
- *Replacement fire* in vegetation classes that already experienced a threshold transition also caused a threshold transition to other uncharacteristic classes:

  - Fire in the *tree with annual grass* class (*TA*) has a mean fire return interval of 100 years (0.01/year) and causes a transition to the *annual grass* class (*AG*).
  - A 10-year fire cycle (0.1/year) applies to the *annual grass* class (*AG*) and behaves as a self-loop.
  - The *shrubland with mixed annual and native perennial grasses* class (*SAP*) will become the *annual grass* class *(AG)* with a *replacement fire* return interval of 50 years (0.02/year) in the Columbia Plateau phytoregion, and 100 years (0.01/years) in the Great Basin and in the Eastern Sierra Nevada phytoregions.
  - *Replacement fire* in the *seeded* class (*SD*) has a 200-year fire return interval (0.005/year) and acts as a self-loop.

Drought is found in most classes and in most cases *drought* creates tree and shrub mortality under the assumption that prolonged and decreased soil moisture weakens plants that might ultimately be killed by insects or disease. Therefore, we do not double-count mortality. A *drought* return interval rate of every 179 years (a rate of 0.0056/year) is used based on the frequency of severe drought intervals estimated by Biondi *et al*. (2007) from 2,300 years of western juniper (*Juniperus occidentalis)* tree ring data from the Walker River drainage of eastern California and western Nevada. Although we recognize that droughts may be more common than every 179 years, severe droughts, which are >7-year drought events with consecutive far-below average soil moisture (narrow tree rings), kill naturally drought resistant shrubs and trees. For vegetation classes in the reference condition, drought affects the *mid-succession closed* (*BSS-C*).

- The *mid-succession closed* class (*BSS-C*) converts to the *mid-succession* class (*BSS-B*).
- D*rought* in the *trees with annual grass* class *(TA)* causes a transition to:

  - The *early-succession shrub* class (*ES*) 5% of times;
  - The *annual grass* class *(AG)* 5% of times; and
  - Selectively thins older shrubs to 114 years within the *trees with annual grass* class (*TA*) 90% of times.

Insect/disease affects the *mid-succession open (BSS-B) and closed (BSS-C)* classes at a rate of 0.013/year (77 years). The *closed-succession* class *(BSS-C)* is thinned to the *open-succession (BSS-B)*, usually by *Arago* moth outbreaks, while the mid-*succession open* class (*BSS-B)* stays the same.

The *very wet year* disturbance only affects the *mid-succession open (BSS-B)* and *mid-succession closed*

(BSS-C) classes at a rate of 0.01/year (100 years) through root rot and root boring insect attacks when soils become water-logged during years of very high precipitation. *Both the mid-succession open and closed* classes *(BSS-B, C)* convert to the *early*-succession *open* class *(BSS-A).*

Annual grass invasion (*AG-invasion*) is set at a moderate rate of 0.01/year (100 years) and causes conversions to several cheatgrass-invaded classes, with the exception of the *seeded* class *(SD),* which converts at a much slower rate to cheatgrass-invaded classes (0.001/year).

- All reference classes *(BSS-A, BSS-B, BSS-C)* convert to the *shrubs with mixed annual and perennial grass* class *(SAP)* via *AG-Invasion* at a rate of 0.01/year (100 years); however the age of an invaded pixel is maintained at conversion.
- The *seeded* class *(SD)* converts to the *shrubs with mixed annual and perennial grass* class *(SAP)* via *AG-Invasion* at a rate of 0.001/year (1,000 years) to show that seedings, some with crested wheatgrass and/or forage kochia, might resist cheatgrass invasion.

Managed herbivory has a return interval of one year (livestock is present every year) but different impact areas based on the distance livestock is willing to travel away from water. The impact of grazing is modeled with area limits, because grazing permits have fixed stocking rates, season of use, and distribution. It is assumed that *managed herbivory* utilizes 5% of all grazable areas; therefore, only 5% of the area is selected for *managed herbivory* and vegetation classes in Wyoming sagebrush "compete" for selection. *Managed herbivory* allows all reference and uncharacteristic classes to remain in their respective classes as a self-loop, but relative age is advanced by an extra year for selected pixels in all reference classes, the *seeded* class, and the *shrubs with mixed annual and perennial grass* class (*SAP*).

Excessive-herbivory affects reference classes and the *seeded* class *(SD)* at a rate of 0.001/year). The rate of 0.001/year, however, is replaced by an implementation rate equal to 0.1% of the grazable are in the phytoregion shared among all vegetation classes (i.e., all grazable classes compete for livestock). The rate of *excessive herbivory* is low because its effects are localized to water sources and pathways close to water sources; therefore, a very small proportion of the landscape is affected.

- The *early-succession* class *(BSS-A)* converts 100% to the *early shrub I (ES)*.
- The *mid-succession open* class *(BSS-B)* and the *mid-succession closed* class *(BSS-C)* convert to *shrubs with mixed annual and perennial grass* class *(SAP)*. (In the big sagebrush steppe biophysical setting, depleted and cheatgrass-invaded shrublands are merged under the assumption that a cheatgrass seedbank is always present in these two states.)
- The *seeded* class *(SD)* remains as such, but the age of succession is advanced by 5 years for selected pixels, thereby indicating accelerated woody succession due to preferential removal of herbaceous species.

Tree invasion is about the natural establishment of pinyon or juniper under the canopy of shrubs during succession. However, tree invasion is an uncharacteristic process in big sagebrush steppe. *Tree invasion* converts the *shrubs with mixed annual and perennial grass* class *(SAP)* to the *trees with annual grass* class *(TA)* at the rate of 0.01/year (100 years). This rate approximately allows tree invasion to follow the three phases of invasion of pinyon and juniper in sagebrush shrublands (Miller and Tausch 2001).

Tree encroachment only affects the *mid-succession closed* class *(BSS-C)*, where it converts to *trees with annual grass (TA)* class at a rate of 0.01/year (100 years). In this model, a shrubland invaded by trees with or without annual grass are merged into one vegetation class to indicate that ecological and

management differences are minor.

Natural recovery occurs only in the *seeded* class, however the rate at which the transition occurs changes over time because maturing seedings are predicted to increasingly resemble native vegetation.

- *The seeded* class *(SD)* converts to the *early-succession (BSS-A), mid-succession open (BSS-B), and mid-succession closed (BSS-C)* classes, respectively, via *natural-recovery* at rates of 0.001/year (1,000 years), 0.01/year (100 years), and 0.05/year (20 years).

The climate change conversion disturbance *(CC-Conversion)* effect on the different classes is complicated because all classes, not just the *early-succession* classes, can change potential (productivity) without significantly changing dominant species (this is an exception to the general approach of climate change conversion). When climate change conversions occur, the age of selected pixel is maintained in the recipient biophysical setting. The rate of conversion is 0.009/year.

- The *early*-succession *open* class *(BSS-A)* converts to the Wyoming sagebrush *early-succession open* class *(WS-A)* between ages 0 and 1;
- The *mid-succession open* class *(BSS-B)* converts to the Wyoming sagebrush *early-succession open* class*(WS-A)* between ages 20 and 24 and to the Wyoming sagebrush *mid-succession open* class *(WS-B)* between ages 25 and 59;
- The *mid-succession closed* class *(BSS-C)* converts to the Wyoming sagebrush *mid-succession open* class *(WS-B)* between ages 60 and 74 and to the Wyoming sagebrush *mid-succession closed* class *(WS-C)* between ages 75 to 300;
- The *annual grass* class *(AG)* converts to the Wyoming sagebrush *annual grass* class *(WS-AG)*;
- The *early shrub* class *(ES)* converts to the Wyoming sagebrush *early shrub* class *(WS-ES)*;
- The *shrubs with mixed annual and perennial grass* class *(SAP)* converts to the Wyoming sagebrush *shrubs with mixed annual and perennial grass* class *(WS-SAP)*;
- The *seeded* class *(SD)* converts to Wyoming sagebrush *seeded* class *(WS-SD)*; and
- The *trees with annual grass* class *(TA)* converts to the Wyoming sagebrush *tree with annual grass* class *(WS-TA)*.

Literature from LANDFIRE Model Tracker:

Anderson, J. E. and R. S. Inouye 2001. Landscape-scale changes in plant species abundance and biodiversity of a sagebrush steppe over 45 years. Ecological Monographs 71:531-556.

Biondi, F., Kozubowski. T.J., Panorska, A.K., and L. Saito. 2007. A new stochastic model of episode peak and duration for eco-hydro-climatic applications. Ecological Modelling 211:383-395.

Brown, David E., ed. 1982. Biotic communities of the American Southwest--United States and Mexico. Desert Plants: Special Issue. 4(1-4): 342 p.

Burkhardt, W. J. and E. W. Tisdale. 1969. Nature and-*succession* status of western juniper vegetation in Idaho. Journal of Range Management 22(4):264-270.

Burkhardt, W. J. and E. W. Tisdale. 1976. Causes of juniper invasion in southwestern Idaho. Ecology 57: 472-484.

Crawford, J. A., R. A. Olson, N. E. West, J. C. Mosley, M. A. Schroeder, T. D. Whitson, R. F. Miller, M. G. Gregg, and C. S. Boyd. 2004. Ecology and management of sage-grouse and sage-grouse habitat. Journal of Range Management 57:2-19.

Hironaka, M., M. A. Fosberg, and A. H. Winward. 1983. Sagebrush-Grass Habitat Types of Southern Idaho. University of Idaho Forest, Wildlife and Range Experiment Station, Bulletin Number 35. Moscow, ID. 44p.

Houston, D. B. 1973. Wildfires in northern Yellowstone National Park. Ecology 54(5): 1111-1117.
Johnson, K. 2000. Artemisia tridentata ssp. vaseyana. In: Fire Effects Information System [Online], U.S. Dept. of Agriculture, Forest Service, Rocky Mountain Research Station, Fire Sciences Laboratory (Producer). Available: http://www.fs.fed.us/database/feis/ [2004, September 17].
Mozingo, H. N. 1987. Shrubs of the Great Basin: a natural history. University of Nevada, Reno, Nevada.
Miller, Richard E.; Fowler, Norma L. 1994. Life history variation and local adaptation within two populations of Bouteloua rigidiseta (Texas grama). Journal of Ecology. 82: 855-864.
Miller, R. F. and J. A. Rose. 1995. Historic expansion of Juniperus occidentalis (western juniper) in southeastern Oregon. The Great Basin Naturalist 55(1):37-45.
Miller, R. F. and J. A. Rose. 1999. Fire history and western juniper encroachment in sagebrush steppe. Journal of Range Management 52. Pp. 550-559.
Miller, R. F., T. J. Svejcar, and J. A. Rose. 2000. Impacts of western juniper on plant community composition and structure. Journal of Range Management 53(6):574-585.
Miller, R. F. and R. J. Tausch. 2001. The role of fire in juniper and pinyon woodlands: a descriptive analysis. Proceedings: The First National Congress on Fire, Ecology, Prevention, and Management. San Diego, CA, Nov. 27- Dec. 1, 2000. Tall Timbers Research Station, Tallahassee, FL. Miscellaneous Publication 11, p:15-30.
Mueggler, W. F. and W. L. Stewart. 1980. Grassland and shrubland habitat types of Western Montana. USDA Forest Service GTR INT-66.
Pedersen, E. K., J. W. Connelly, J. R. Hendrickson, and W. E. Grant. 2003. Effect of sheep grazing and fire on sage grouse populations in southeastern Idaho. Ecological Modeling 165:23-47.
Simon, S. A. 1990. Fire effects from prescribed underburning in central Oregon ponderosa pine plant communities: first and second growing season after burning. Pp. 93-109. In Fire in Pacific Northwest Ecosystems. Thomas E. Bedell, editor. Department of Rangeland Resources, Oregon State University, Covallis, OR. 145p.
Tart, D. L. 1996. Big sagebrush plant associations of the Pinedale Ranger district. Pinedale, WY: USDA For. Serv. Bridger-Teton National Forest. Jackson, WY. 97 p.
Welch, B. L, C. Criddle. 2003. Countering Misinformation Concerning Big Sagebrush. Research Paper RMRS-RP-40. Ogden, UT: U.S. Department of Agriculture, Forest Service, Rocky Mountain Research Station. 28 p.
Winward, A. H. 1991. A renewed commitment to management in sagebrush grasslands. In: Management in the Sagebrush Steppes. Oregon State University Agricultural Experiment Station Special Report 880. Corvallis OR. Pp.2-7.
Winward, A. H. 2004. Sagebrush of Colorado; taxonomy, distribution, ecology, & management. Colorado Division of Wildlife, Department of Natural Resources, Denver, CO.

State-and-Transition Model:

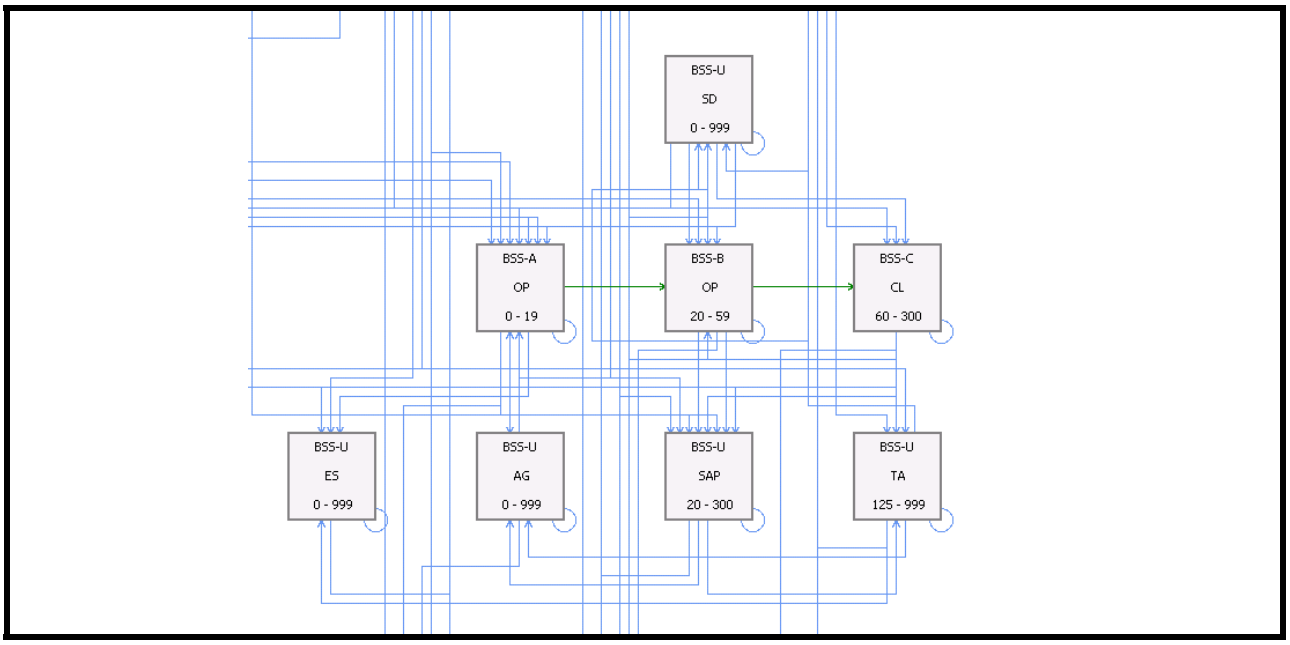
BSS-U
SD
0 - 999
BSS-A
OP
0 - 19
BSS-B
OP
20 - 59
BSS-C
CL
60 - 300
BSS-U
ES
0 - 999
BSS-U
AG
0 - 999
BSS-U
SAP
20 - 300
BSS-U
TA
125 - 999

Big Sagebrush Steppe-upland (BSu) 1126u

Area of Application and Context:

- **Nevada Wildlife Action Plan revision**
- **Livestock grazing**
- **Full fire suppression management**
- **Date created: 2011**

Vegetation classes:

- A-***Early***: 0-10% canopy of mountain sage, mountain brush; 10-80% grass/forb cover; 0-12 yrs
- B-***Mid-open***: 11-30% cover of mountain sage, mountain shrub; >50% herbaceous cover; 13-38 yrs
- C-***Mid-closed***: 31-50% cover of mountain sage, mountain brush, occasional blackbrush; 25-50% herbaceous cover; <10% conifer sapling cover; 38+ yrs
- D-***Late-open***: 10-30% cover pinyon-juniper <3m; 25-40% cover of mountain sage, mountain brush, occasional blackbrush; <30% herbaceous cover; 80-129 yrs
- E-***Late-closed***: 31-40% pinyon-juniper cover <8m; 6-20% shrub cover; <20% herbaceous cover; 130+ yrs
- *U-ES:* ***Early-Shrub*****:** 20-50% cover snakeweed or rabbitbrush species
- U-*TE*: ***Tree-Encroached***: 31-40% pinyon-juniper cover 10-25m; <5% shrub cover; <5% herbaceous cover
- U-*DP:* ***Depleted***: 20-50% cover of mountain sage, mountain brush, occasional blackbrush; <5% herbaceous cover; <10% conifer sapling cover
- U-*SAP:* ***Shrub-Annual-Perennial-Grass***: 11-50% cover of mountain sage, mountain brush, occasional blackbrush; >5% cover of native grass; >5% cheatgrass cover; <10% conifer sapling cover
- U-*SA:* ***Shrub-Annual Grass***: 11-50% cover of mountain sage, mountain brush, occasional blackbrush; ≥5% cheatgrass cover; ≤5% cover of native gass; <10% conifer saplings cover;
- U-*AG:* ***Annual Grass***: 10-30% cover of cheatgrass; snakeweed or rabbitbrush may be present;
- U-*TA:* ***Tree-Annual Grass*****:** 31-40% pinyon-juniper cover <8m; ≥5% cover of cheatgrass; <20% shrub cover; <20% herbaceous cover;
- U-*SD:* ***Seeded (native)***: >10% seeded native grasses, forbs, and shrubs.

Reference Condition:

- **Natural Range of Variability**

	East Sierra, Calcareous, Lahontan, Walker	Elko	Mojave
*A-**Early***	21%	19%	22%
*B-**Mid-open***	44%	42%	39%
*C-**Mid-closed***	21%	23%	32%
*D-**Late-open***	7%	8%	1%
*E-**Late-closed***	7%	7%	6%
U	0%	0%	0%

Note that the big sagebrush-upland biophysical setting is very different in the Mojave Desert phytoregions than in other phytoregions because the system behaves like desert wash vegetation and includes flash flooding.

Succession:

Succession follows the 5-box pathway with vegetation starting as predominantly herbaceous and ending with pinyon and juniper dominance and a viable shrub and herbaceous understory. The succession pathway is not entirely deterministic as the *tree-invasion* probabilistic disturbance is used to cause a transition from the *mid-succession closed* (*BSu-C*) to the *late-succession open* (*BSu-D*) classes starting in year 100. The rate of transition is 0.01/year. This rate is consistent with the transition from Phase 1 to Phase 2 by Miller and Tausch (2001): this rate approximately replicated encroachment levels proceeding in three phases of about 50 years each. Deterministic succession transitions occur at the following ages:

- *Early-succession* to *mid-succession open*: 11 years
- *Mid-succession open* to *mid-succession closed*: 49 years
- *Mid-succession closed* to *late-succession open*: >100 years (probabilistic)
- *Late-succession open* to *late-succession closed*: 300 years

Natural Disturbances:

Replacement fire was the primary stochastic disturbance. *Replacement fire* restarts the succession clock at age zero within the reference condition, which was labeled the *early-succession* class or *BSu-A*. The mean return interval of *replacement fire* changes with vegetation classes:

- 75 years (0.0133/year) in the *early-succession* class (*BSu-A*);
- 50 years (0.02/year) in the *mid-succession classes* (*BSu-B* and *BSu-C)* and *late-succession open* classes (*BSu-D*); and
- 75 years (0.013/year) in the wooded *late-succession closed* class (*BSu-E*).

Replacement fire in vegetation classes that already experienced a threshold transition also caused a threshold transition to other uncharacteristic classes:

- Fire in the *tree-encroached class* (*TE*) has a mean fire return interval of 111-120 years (0.0084-0.009/year) and causes the following transitions:
    - 45% of times to the *annual grass* class (*AG*);
    - 45% of times to the *early shrub* class (*ES*); and
    - 10% of times to the *shrub annual grass* class (*SA*).
- Fire in the *tree-encroached shrub with annual grass* class (*TA*) has a mean fire return interval of 77 years (0.013/year) and causes a transition to the *annual grass* class (*AG*).
- The *depleted* class (*DP*) burns with a 77-year return interval (0.013/year) and converts to the *early shrub* class (*ES*). After 75 years, this class burns at a lower rate of 0.005/year (200 years).
- A 10-year fire cycle applies to the *annual grass* class (*AG*) and fire behaves as a self-loop.
- Due to the presence of non-native annual species, the fire return interval is shorter (35 years or

0.0287/year) in the *shrub with annual grass* class (*SA*) than in the *depleted shrub* class (*DP*). Fire in this class causes a conversion to the *annual grass* class (*AG)*.

- With a *replacement fire* of 35 years (0.0288/year), the *shrub with annual and native perennial grass* class (*SAP*) becomes two classes:

    - The *annual grass* class (*AG*) 50% of times; and
    - The *early-succession* class (*BSu-A*) the other 50% of occurrences.

- *Replacement fire* in the *seeded* class (*SD*) has a 100-year fire return interval (0.005/year) and acts as a self-loop.

Drought is found in most classes and in most cases *drought* creates tree and shrub mortality under the assumption that prolonged and decreased soil moisture weakens plants that might ultimately be killed by insects or disease. Therefore, we do not double-count mortality. A *drought* return interval rate of every 178 years (a rate of 0.0056/year) is used based on the frequency of severe drought intervals estimated by Biondi *et al*. (2007) from 2,300 years of western juniper (*Juniperus occidentalis)* tree ring data from the Walker River drainage of eastern California and western Nevada. Although we recognize that droughts may be more common than every 178 years, severe droughts, which are >7-year drought events with consecutive far-below average soil moisture (narrow tree rings), kill naturally drought resistant shrubs and trees. For vegetation classes in the reference condition, drought affects the *mid-succession closed* (*BSu-C*) to *late-succession* closed (*BSu-E*) classes (i.e., not the first two classes of succession) in different ways.

- The *mid-succession closed* class (*BSu-C*) follows the more traditional outcome of 90% thinning within the class (to its beginning) and 10% to the *mid-succession open* class (*BSu-B*).
- Drought partitions the *late-succession open* class (*BSu-D*) into three pathways that results from thinning young pinyon, juniper, or old shrubs:

    - 10% thinning within the class to its beginning age;
    - 60% thinning to the previous class (*mid-succession closed* or *BSu-C*); and
    - 30% to the *mid-succession open* class (*BSu-B*).

- The *late-succession closed* class (BSu-*E*), which is wooded, behaves differently than others to drought. Because trees have already suppressed the understory,

    - 10% of the thinning effect kills trees but releases shrubs and grass at a low cover value more typical of the *mid-succession open* class (*BSu-B*); and
    - The remaining 90% of *drought* effects accelerates woody succession by 5 years when a pixel is chosen because increased resource competition is to the detriment of shrubs and the herbaceous understory.

Drought affects four uncharacteristic classes:

- D*rought* in the *depleted* class (*DP*) causes a transition to:

    - The *early-succession shrub* class (*ES*) 10% of times; and
    - Selectively thins older shrubs to age 50 years within the *depleted* class (*DP*) 90% of times.
- The fate of the *shrub-annual-grass* class (*SA*) is similar to the *depleted* class (*DP*) except the *annual grass* class *(AG*) replaces the *early shrub* class (*ES*).

- The *tree-encroached* class (*TE*) is thinned by *drought*:

    - 50% of times to the *early-shrub* class (*ES*); and
    - 50% to the *shrub annual grass* class (*SA*);

- The *shrub with mixed annual and perennial grasses* class (*SAP*) responds to *drought* by thinning to the following classes:

    - 1% to the *early-succession* class (*BSu-A*);
    - 9% to the *annual grass* class (*AG*); and
    - 90% as a self-loop with age reset to 50 years at the beginning of the class.

- Drought also affects the *shrub annual grass* class (*SA*) by either:

    - Converting to *annual grass* class (*AG)* 10% of the time; and
    - 90% as a self-loop with age reset to 50 years at the beginning of the class.

Annual grass invasion (*AG-invasion*) is set at a moderate rate of 0.005/year (1 out of 200 pixels) converted to a cheatgrass-invaded class per year with the exception of the *seeded* class *(SD),* which converts at a much slower rate (0.001/year). A base rate of 0.001/year was estimated from data of northwest Utah collected by the Utah Division of Wildlife Resources in black sagebrush semi-desert. Black sagebrush semi-desert is usually considered more resistant to cheatgrass invasion than big sagebrush dominated ecological systems. The higher rates indicate greater susceptibility to non-native annual species because soils are more productive. Invasion starts in the older *mid-succession closed* class (*BSu-C*) under the assumption that strong competition from grass species prevents invasion in younger classes:

- The *mid-succession closed* and *late-succession open* classes convert to the *shrub with mixed annual and perennial species* class (*SAP*).
- The *depleted* class (*DP*) converts to the *shrub annual grass* class *(SA)*.
- The *tree encroached* class *(TE*) converts to *tree with annual grass* class *(TA).*
- The rate of invasion in the *seeded* class is lower at 0.001/year and starts at the age of 50 years, because the class is considered more resistant to exotic annual species invasion because of the frequent use of introduced species for seeding. *Annual grass invasion* causes a transition to the *shrubs with mixed annual and perennial species* class *(SAP)*.

Managed herbivory has a return interval of one year (livestock is present every year) but different impact areas based on the distance livestock is willing to travel away from water. The impact of grazing is modeled with area limits, because grazing permits have fixed stocking rates, season of use, and distribution. It is assumed that *managed herbivory* utilizes 5% of all grazable areas; therefore, only 5% of the area is selected for *managed herbivory* and vegetation classes in Wyoming sagebrush "compete" for selection. *Managed herbivory* allows all reference and uncharacteristic classes to remain in their respective classes as a self-loop, but relative age is advanced by an extra year for selected pixels in all reference classes, the *seeded* class (*SD;* the seeded class is absent from the Mojave phytoregions), and the *shrubs with mixed annual and perennial grass* class (*SAP*) from years 50 to 74 years. After year 74, managed herbivory causes a transition to the the *shrub with annual grass* class (*SA*) to represent the loss of remnant perennial grasses due to chronic grazing synergistically acting with competition from cheatgrass.

Excessive herbivory affects the same classes as *managed herbivory* at a rate of 0.001/year (1,000 years). The rate of 0.001/year, however, is replaced by an implementation rate equal to 0.1% of the grazable are in the phytoregion shared among all vegetation classes (i.e., all grazable classes compete for livestock). The rate of *excessive herbivory* is low because its effects are localized to water sources and pathways close to water sources; therefore, a very small proportion of the landscape is affected. The *seeded (SD) class* isn't affected in the Mojave phytoregions.

- *The early-succession* and *mid-succession open* classes (*BSu-A* and *B)* convert to the *early shrub* class *(ES)*.
- The *mid-succession closed* class (*BSu-C)* converts to the *depleted* class *(DP).*
- Seventy-five percent of the *late-succession open* class (*BSU-D*) is retained in the class with succession age advancing by 3 years for selected pixels, whereas 25% converts to the *depleted* class *(DP)*.

Flash flooding only applies to the Mojave phytoregion. A *flash flood* event resets all reference classes to the *early-succession open* class (*BSu-A)* at a rate of 0.0075/year (134 years). Our return interval is based on analysis of gage data from Kyle Canyon in the Spring Mountains. *Flash flooding* affects four uncharacteristic classes:

- The *depleted* class *(DP)* is converted to the *early shrub* class *(ES)* at a rate of 0.05/year (20 years);
- The *shrubs with annual grass* class *(SA), shrubs with mixed annual and perennial grass* class *(SAP),* and *tree with annual grass (TA)* converts equally between the *annual grass* class *(AG)* and the *early shrub* class *(ES)* classes*;*
- The *tree encroached* class *(TE)* converts to the *early shrub* class *(ES).*

Tree invasion is the natural process of new trees (mostly pinyon and juniper) establishing during succession, usually underneath shrubs such as sagebrush and bitterbrush. *Tree invasion* transitions at a uniform rate of 0.01/year throughout all of the specified classes with the exception of the Mojave phytoregion, where the rate drops by half to 0.005/year. The rate of 0.01/year approximately allows tree invasion to follow the three phases of invasion of pinyon and juniper in sagebrush shrublands (Miller and Tausch 2001).

- After 40 years of succession, the *mid-succession open* class (*BSu-B)* converts to the *late-succession open* class (*BSu-D);*
- The *mid-succession closed* class (*BSu-C)* converts to the *late-succession open* class (*BSu-D);*
- *The depleted* class *(DP)* converts to the *tree encroached* class (*TE);*
- The *shrubs with annual grass* class *(SA)* converts to the *trees mixed with annual grass* class (*TA);*
- The *shrubs with mixed annual and perennial grass* class *(SAP*) converts to the *trees mixed with annual grass* class (*TA).*

Besides the decreased rate of transition for the Mojave, the other difference is that *tree invasion* does not affect the *mid-succession open* class because we assume that droughty conditions in the Mojave Desert slowdowns tree establishment.

Tree encroachment is the slow process by which long-established trees finally eliminate the understory shrubs and herbaceous species, mostly by competition for soil moisture. *Tree encroachment* only affects the *late-succession closed (BSu-E)* after 250 years of succession, where it converts to the *tree*

encroached class *(TE)* at an arbitrary rate of 0.02/year (50 years).

Natural recovery has a complicated effect on big sagebrush upland. It assumes that sufficient moisture is present to allow recovery from some uncharacteristic classes to reference classes. The majority of the transitions occur at a low rate of 0.001/year (1,000 year). The exception occurs in the *seeded (SD)* class, where *natural recovery* increases as the system ages.

- The *early shrub* class *(ES)* transitions to the *mid-succession open* class *(BSu-B)* from 12-49 years of age;
- The *early shrub* class *(ES)* transitions to the *mid-succession closed* class *(BSu-C)* from 50-300 years of age;
- The *shrubs with mixed annual and perennial species* class *(SAP)* transitions to the *mid-succession closed* class *(BSu-C)*;
- The *seeded* class *(SD;* absent in the Mojave phytoregion*)* converts:

    - At a rate of 0.001/year to the *early-succession open* class (*BSu-A)* from ages 5 to 11 years of age;
    - At a rate of 0.01/year to the *mid-succession open* class *(BSu-B)* from ages 12 to 49 years;
    - At a rate of 0.05/year to the *mid-succession closed* class *(BSu-C)* from ages 50 to 300 years.

The *climate change conversion (CC-Conversion)* effects vary across regions, but only classes with early succession dynamics participate:

- In all phytoregions except the Mojave Desert, the conversion splits pixels 10% towards the low-black sagebrush biophysical setting and 90% to the Wyoming big sagebrush biophysical setting. Rates of conversion vary among the Columbia Plateau, Great Basin, and Easter Sierra Nevada phytoregions:

    - The rate for the Columbia Plateau and Eastern Sierra Nevada ecoregions is 0.15/year;
    - The rate for the Great Basin ecoregion is 0.0560/year.

- In the Mojave phytoregion, where this biophysical setting often behaves like a desert wash, c*limate change conversion* causes a transition to the desert wash biophysical setting:

    - The *early-succession open* class (BSu-A) and the *early shrub* class *(ES)* convert, respectively, to the *washes early-succession* class (*WAS-A)* at rates of 0.25/year and 0.95/year;
    - The *annual grass* class *(AG)* converts to the washes *exotic tree* class (*ET*) at a rate of 0.03.

Literature from LANDFIRE Model Tracker:

Anderson, J. E. and R. S. Inouye 2001. Landscape-scale changes in plant species abundance and biodiversity of a sagebrush steppe over 45 years. Ecological Monographs 71:531-556.

Biondi, F., Kozubowski. T.J., Panorska, A.K., and L. Saito. 2007. A new stochastic model of episode peak

and duration for eco-hydro-climatic applications. Ecological Modelling 211:383-395.
Brown, David E., ed. 1982. Biotic communities of the American Southwest--United States and Mexico. Desert Plants: Special Issue. 4(1-4): 342 p.
Burkhardt, W. J. and E. W. Tisdale. 1969. Nature and-*succession* status of western juniper vegetation in Idaho. Journal of Range Management 22(4):264-270.
Burkhardt, W. J. and E. W. Tisdale. 1976. Causes of juniper invasion in southwestern Idaho. Ecology 57: 472-484.
Crawford, J. A., R. A. Olson, N. E. West, J. C. Mosley, M. A. Schroeder, T. D. Whitson, R. F. Miller, M. G. Gregg, and C. S. Boyd. 2004. Ecology and management of sage-grouse and sage-grouse habitat. Journal of Range Management 57:2-19.
Hironaka, M., M. A. Fosberg, and A. H. Winward. 1983. Sagebrush-Grass Habitat Types of Southern Idaho. University of Idaho Forest, Wildlife and Range Experiment Station, Bulletin Number 35. Moscow, ID. 44p.
Houston, D. B. 1973. Wildfires in northern Yellowstone National Park. Ecology 54(5): 1111-1117.
Johnson, K. 2000. Artemisia tridentata ssp. vase Yana. In: Fire Effects Information System [Online], U.S. Dept. of Agriculture, Forest Service, Rocky Mountain Research Station, Fire Sciences Laboratory (Producer). Available: http://www.fs.fed.us/database/feis/ [2004, September 17].
Mozingo, H. N. 1987. Shrubs of the Great Basin: a natural history. University of Nevada, Reno, Nevada.
Miller, Richard E.; Fowler, Norma L. 1994. Life history variation and local adaptation within two populations of Bouteloua rigidiseta (Texas grama). Journal of Ecology. 82: 855-864.
Miller, R. F. and J. A. Rose. 1995. Historic expansion of Juniperus occidentalis (western juniper) in southeastern Oregon. The Great Basin Naturalist 55(1):37-45.
Miller, R. F. and J. A. Rose. 1999. Fire history and western juniper encroachment in sagebrush steppe. Journal of Range Management 52. Pp. 550-559.
Miller, R. F., T. J. Svejcar, and J. A. Rose. 2000. Impacts of western juniper on plant community composition and structure. Journal of Range Management 53(6):574-585.
Miller, R. F. and R. J. Tausch. 2001. The role of fire in juniper and pinyon woodlands: a descriptive analysis. Proceedings: The First National Congress on Fire, Ecology, Prevention, and Management. San Diego, CA, Nov. 27- Dec. 1, 2000. Tall Timbers Research Station, Tallahassee, FL. Miscellaneous Publication 11, p:15-30.
Mueggler, W. F. and W. L. Stewart. 1980. Grassland and shrubland habitat types of Western Montana. USDA Forest Service GTR INT-66.
Pedersen, E. K., J. W. Connelly, J. R. Hendrickson, and W. E. Grant. 2003. Effect of sheep grazing and fire on sage grouse populations in southeastern Idaho. Ecological Modeling 165:23-47.
Simon, S. A. 1990. Fire effects from prescribed underburning in central Oregon ponderosa pine plant communities: first and second growing season after burning. Pp. 93-109. In Fire in Pacific Northwest Ecosystems. Thomas E. Bedell, editor. Department of Rangeland Resources, Oregon State University, Corvallis, OR. 145p.
Tart, D. L. 1996. Big sagebrush plant associations of the Pinedale Ranger district. Pinedale, WY: USDA For. Serv. Bridger-Teton National Forest. Jackson, WY. 97 p.
Welch, B. L, C. Criddle. 2003. Countering Misinformation Concerning Big Sagebrush. Research Paper RMRS-RP-40. Ogden, UT: U.S. Department of Agriculture, Forest Service, Rocky Mountain Research Station. 28 p.
Winward, A. H. 1991. A renewed commitment to management in sagebrush grasslands. In: Management in the Sagebrush Steppes. Oregon State University Agricultural Experiment Station Special Report 880. Corvallis OR. Pp.2-7.
Winward, A. H. 2004. Sagebrush of Colorado; taxonomy, distribution, ecology, & management. Colorado Division of Wildlife, Department of Natural Resources, Denver, CO.

State-and-Transition Model:

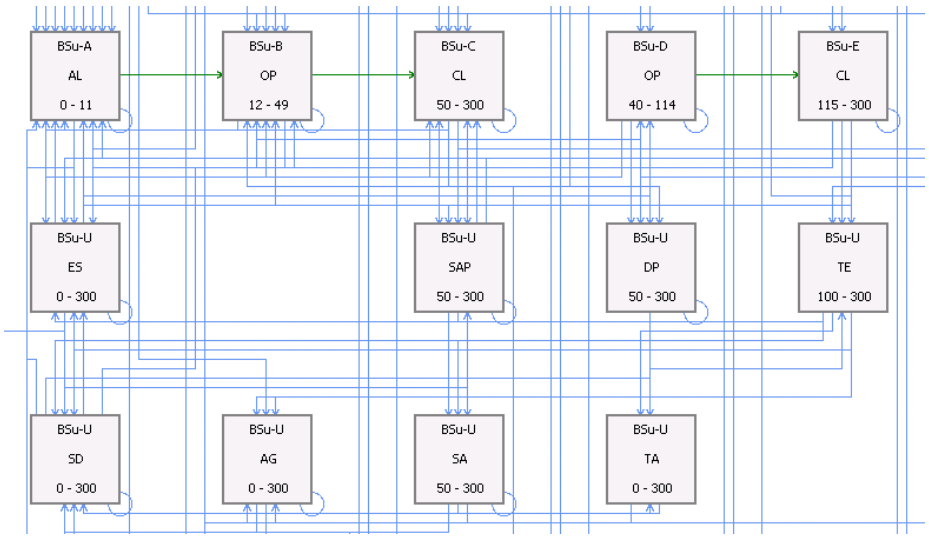

Blackbrush-mesic (BM) 1082m

Area of Application and Context:

- **Nevada Wildlife Action Plan.**
- **Livestock grazing**
- **Full fire suppression management**
- **Date created: 2011**

Vegetation classes:

Vegetation classes can include Joshua Tree Woodlands, but additional classes were not created just for Joshua trees. USDA's Natural Resource Conservation Service (NRCS) does not recognize Joshua tree woodlands as a distinct ecological site because the soils on which it grows are the same the soils as creosotebush-white bursage, thermic and mesic blackbrush, and Great Basin mixed salt desert ecological sites.

- A-***Early***: 5-40% cover of snakeweed, big sagebrush, turpentine bush, yucca, and desert bitterbrush; young blackbrush may be present; 0-199 yrs
- B-***Mid-closed***: 10-50% cover blackbrush <1.0m; >5% cover of young Joshua trees; <10% cover of grasses (desert needlegrass, Indian ricegrass, galleta grass, fluff grass, and threeawn); other shrubs present; Joshua trees may be present; pinyon or juniper saplings present; 200+ yrs
- C-***Late-open***: 10-40% of pinyon or juniper; 5-40% blackbrush cover; >5% cover of Joshua trees; <10% cover of grasses (desert needlegrass, Indian ricegrass, galleta grass, fluff grass, and threeawn); other shrubs present; Joshua trees may be present; 400+ yrs
- U-*SAP:* ***Shrub-Annual-Perennial-Grass***: 10-50% cover of blackbrush or other shrubs <1.0m tall; Joshua trees may be present; 5-20% non-native grass or forb cover; native grass cover may be spotty to common
- U-*TA:* **Tree-Annual Grass**: 10-40% of pinyon or juniper; >5% cover of non-native grasses; <20% blackbrush cover; Joshua trees may be present
- U-*AG:* ***Annual Grass***: >10% cover of exotic forbs or annual grasses; <10% cover of blackbrush or other shrubs
- U-*SD:* ***Seeded*** (native): >10% seeded native or non-native grasses, forbs, and shrubs
- U-*BG:* ***Bare ground***: mineral soil exposed by human disturbances

Reference Condition:

Natural Range of Variability

	Walker/Lahontan/Calcareous	Eastern Sierra Nevada
*A-**Early***	29%	25%
*B-**Mid-Closed***	38%	45%
*C-**Late-Open***	33%	30%

Uncharacteristic	0%	0%

Succession:

Succession follows the 3-box pathway with vegetation starting as predominantly dominated by snakeweed and herbaceous species and ending with pinyon or juniper dominance and a viable shrub understory. Deterministic succession transitions occur in the first two boxes, whereas the last step of succession is probabilistic:

- *Early-succession* to *mid-succession closed*: 200 years
- *Mid-succession closed* to *late-succession open*: ≥400 years (probabilistic)

Natural Disturbances:

Very few natural disturbances affect blackbrush: replacement fire, drought, and tree invasion, tree encroachment and natural recovery. Blackbrush is an ancient vegetation type whose individual plants resisted disturbances for hundreds of years (Pendleton et al. 1986). Moreover, blackbrush is not fire adapted and has not evolved with fire (Callison et al. 1985).

Replacement fire is present at very low rates in most classes. The fire return interval of *replacement fire* changes with vegetation classes:

- From 10,000 years (0.0001/year) in the *early-succession* class (*BM-A*); and
- To 500 and 666 years (0.002/year and 0.0015/year respectively) in the *mid-succession closed and late-succession open* classes (*BM-B and BM-C*).

Replacement fire in vegetation classes that already experienced a threshold transition also causes a threshold transition to other uncharacteristic classes.

- Fire experienced every 500 years (0.002/year) on average in the *tree annual grass* (*TA*) causes a transition to the *annual grass* class (*AG*).
- The *shrubs with annual and native perennial species* class (*SAP*) burns every 500 years (0.002/year) on average, causing a transition to the *annual grass* class (*AG*).
- The a*nnual grass species* class (*AG*) burns every 10 years (0.1/year). Age is reset to zero.

Blackbrush is assumed adapted to *drought*. Older reference classes with juniper and pinyon and some uncharacteristic classes are affected. *Drought* causes stand replacing events (generally 1% to 10% of events) and stand thinning (99% to 90%, respectively, of events) in classes with trees. A *drought* return interval of 178 years (a rate of 0.0056/year) is used based on the frequency of severe drought intervals estimated by Biondi *et al*. (2007) from 2,300 years of western juniper (*Juniperus occidentalis)* tree ring data from the Walker River drainage of eastern California and western Nevada. These rates highly correlate with other tree species throughout Nevada (Biondi *et al*. 2007). Although we recognize that droughts may be more common than every 178 years, severe droughts, which are >7-year drought events with consecutive far-below average soil moisture (narrow tree rings), kill naturally drought resistant shrubs and trees.

- For the *late-succession open* class (*BM-C*), drought-induced mortality either:
  - Causes a transition to the previous succession class (*BM-B*) 7% of times by thinning juniper and pinyon; or
  - Kills shrubs and trees as a rare stand replacing event (3% of events), causing a transition to the *early-succession* class (*BM-A*).
- The *tree-encroached with exotic annual species* class (*TA*) experiences drought with:
  - Thinning back to age 400 years within the class for about 90% of times. We chose 90% thinning, as opposed to 99%, because trees are at the elevational lower limit of their tolerance to warmer climate and competition for soil moisture is assumed more intense among denser tree stands.
  - The remaining 10% of drought mortality is partitioned as a transition to the *exotic annual species* class (*AG*).

Managed herbivory has a return interval of one year (livestock is present every year) but different impact areas based on the distance livestock is willing to travel away from water. The impact of grazing is modeled with area limits, because grazing permits have fixed stocking rates, season of use, and distribution. It is assumed that *managed herbivory* utilizes 5% of all grazable areas; therefore, only 5% of the area is selected for *managed herbivory* and vegetation classes "compete" for selection. *Managed herbivory* allows all reference classes to remain in their respective classes as a self-loop, but relative age is advanced by one extra year for selected pixels in the *early-succession* class (*BM-A*) and by three years in the *mid-succession* and *late-succession* classes (*BM-B* and *BM-C*).

Tree (pinyon and juniper) invasion is responsible for the last step between the *mid-successionand late-succession* classes (*BM-B* and *BM-C*). This disturbance also determines succession from the *shrubs with annual and native perennial species* class (*SAP*) to the *tree-encroached with exotic annual species* class (*TA*). Pinyon and juniper invade shrublands at a rate 0.005/year after 400 years of age. Tree encroachment, which causes competitive elimination of midstory and understory vegetation, is responsible for the transition from *late-succession open* class *(BM-C)* to *tree annual grass* class *(TA)*. For simplicity, we assume no realistic difference between tree-encroached blackbrush and the late-succession blackbrush with trees invaded by non-native annual species.

Annual grass invasion has a rate of 0.005/year (200 years) operating in the following classes:

- The *early-succession open class (BM-A)* transitions to the *annual grass class (AG)* before 5 years of age, and transitions to *shrubs mixed with annual and perennial species (SAP*) after age 4;
- The m*id-succession closed* class (*BM-B)* transitions to *shrubs with mixed annual and perennial species* (SAP);
- The *late-succession* class *(BM-C)* transitions to the *tree annual grass* class (*TA*);
- The uncharacteristic *bare ground (BG)* and *seeded (SD)* classes transition to annual grass (AG), however the *seeded class* (*SD*) will only transition until it reaches 4 years of age; and
- After 4 years, the *seeded class* (*SD*) transitions to the *shrubs mixed with annual and perennial species* class *(SAP)*.

Natural recovery occurs only in the *seeded* class *(SD)* at a rate that varies with the age of the system.

From 0-199 years, the *seeded* class (*SD*) would transition at a slow rate of 0.001/year to the *early-succession open* class *(BM-A)* and after 199 years it transitions at a rate of 0.005/year to the *mid-succession* class *(BM-B)*. In either case, the rates are slow, therefore simulating thedifficult of recovery for blackbrush communities.

The *OHV* disturbance creates the *bare ground* class (*BG*) from illegal recreational use of off-highway vehicles. All classes are source classes. The rate is 0.0005/year (2000 years) to reflect that users predominantly reuse existing disturbed areas and only incrementally add new areas of illegal driving.

Climate change conversion has complicated effects. The *early-succession open* class *(BM-A)* transfers at a rate of 0.0085/year (118 years) to the blackbrush thermic *early-succession open* class *(BT-A)*. The *mid-succession* class (*BM-B)* transitions to the *early-succession open class (BT-A)* at 200 years, and then at 500 years transitions to the blackbrush thermic *mid-succession closed* class *(BT-B).* The uncharacteristic classes *annual grass (AG)* and *shrubs with annual and perennial grass (SAP)* transition into blackbrush-thermic as the same uncharacteristic classes. This rate is increased to a rate of 0.0155/year (65 years) in the Mojave ecoregion.

Literature from LANDFIRE Model Tracker:

Abella, S.R., D.J. Craig, L.P. Chiquoine, K.A. Prengaman, S.M. Schmid, and T.M. Embrey. 2010. Relationships of native desert plants with red brome (*Bromus rubens*): Toward identifying invasion-reducing species. Invasive Plant Science and Management 4:115-124.

Abella, S.R. and A.C. Newton. 2009. A systematic review of species performance and treatment effectiveness for revegetation in the Mojave Desert, USA. Pages 45-74 in A. Fernandez-Bernal and M.A. De La Rosa, eds. Arid Environments and Wind Erosion. Hauppauge, NY: Nova Science.

Abella, S.R., E.C. Engel, C.L. Lund, and J.E. Spencer. 2009.Early post-fire plant establishment on a Mojave Desert burn. Madroño 56:137-148.

Beatley, J. C. 1976. Vascular plants of the Nevada Test Site and central-southern Nevada: Ecological and geographic distributions. Energy Research and Development Administration TID-26881. Technical Information Center, Office of the Technical Information, Springfield Virginia. 308 pp.

Biondi, F., Kozubowski. T.J., Panorska, A.K., and L. Saito. 2007. A new stochastic model of episode peak and duration for eco-hydro-climatic applications. Ecological Modelling 211:383-395.

Brooks, M. L. and J. R. Matchett. 2003. Plant community patterns in unburned and burned blackbrush (Coleogyne ramosissima Torr.) shrublands in the Mojave Desert. Western North American Naturalist 63: 283-298.

Brooks, M. L, T. C. Esque, and T. Duck, 2003. Fuels and fire regimes in creosotebush, blackbrush, and interior chaparral shrublands. Report for the Southern Utah Demonstration Fuels Project. USDA Forest Service. Rocky Mountain Research Station, Montana. 18 pp.

Callison, J., Brotherson, J.D. 1985. Habitat relationships of the blackbrush community (Coleogyne ramosissima) of southwestern Utah. Great Basin Naturalist 45:321–326.

Callison, J., Brotherson, J.D., Bowns, J.E. 1985. The effects of fire on the blackbrush [*Coleogyne ramosissima*] community of southwestern Utah. Journal of Range Management 38: 535–538.

DeFalco, L.A., D.R. Bryla, V. Smith-Longozo, and R.S. Nowak. 2003. Are Mojave Desert annual species equal? Resource acquisition and allocation for the invasive grass *Bromus madriensis* subsp. *Rubens* (Poaceae) and two native species. American Journal of Botany 90:1045-1053.

Haines, D. F., T. C. Esque, L. A. DeFalco, S. J. Scoles, M. L. Brooks, R. H. Webb. 2003. Fire and exotics in the Mojave Desert: an irreversible change? Available at http://www.dmg.gov/resto-pres/mon-08-haines.pdf.

Lei, S.A. 1997. Variation in germination response to temperature and water availability in blackbrush (*Coleogyne ramosissima*) and its ecological significance. The Great Basin Naturalist 57: 172–177.

Lei, S.A., Walker, L.R. 1997. Biotic and abiotic factors influencing the distribution of *Coleogyne* communities in southern Nevada. The Great Basin Naturalist 57: 163–171.

Lin, G., Phillips, S.L., Ehleringer, J.R. 1996. Monsoonal precipitation responses of shrubs in a cold desert community on the Colorado Plateau. Oecologia 106: 8–17.

McArthur, E.D., Sanderson, S.C. 1985. A cytotaxonomic contribution to the western North American Rosaceous flora. Madroño 32: 24–28.

Pendleton, B.K., S.E. Meyer, and R.L. Pendleton. 1996. Blackbrush biology: insights after three years of a long-term study. pp. 223-227 in Roundy, Bruce A., E. Durant McArthur, Jennifer S. Haley, David K. Mann, compilers. Proceedings: wildland shrub and arid land restoration symposium. Gen. Tech. Rep. INT-GTR-315. Ogden, UT: U.S. Department of Agriculture, Forest Service, Intermountain Research Station. 384 p. October 19-21, 1993. Las Vegas, NV.

Spaulding, W.G. 1990. Vegetation dynamics during the last deglaciation, southeastern Great Basin, U.S.A. Quaternary Research 33: 118–203.

Stebbins, G.L., Major, J. 1965. Endemism and speciation in the California flora. Ecological Monographs 35: 1–35.

State-and-Transition Model:

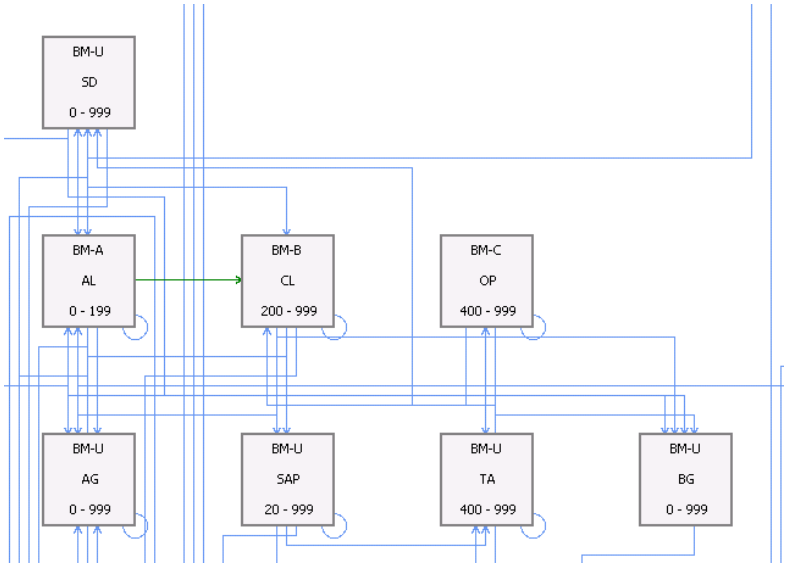

Blackbrush – thermic (BM) 1082t

Area of Application and Context:

- **Nevada Wildlife Action Plan**
- **Livestock grazing**
- **Full fire suppression management**
- **Date created: 2011**

Vegetation classes:

Vegetation classes can include Joshua Tree Woodlands, but additional classes are not created just for Joshua trees. USDA's Natural Resource Conservation Service (NRCS) does not recognize Joshua tree woodlands as a distinct ecological site because the soils on which it grows are the same the soils as creosotebush-white bursage, thermic and mesic blackbrush, and Great Basin mixed salt desert ecological sites.

- *A:* ***Early***: 5-50% cover of snakeweed, turpentine bush, yucca; <10% cover blackbrush; 0-499 yrs
- *B:* ***Late-closed***: 10-40% cover blackbrush <1.0m; creosotebush present; >1% cover of Joshua trees; 0-10% cover of grasses (desert needlegrass, Indian ricegrass, galleta grass, fluff grass, and threeawn), other shrubs present; 500+ yrs
- *U-SAP:* ***Shrub- Annual-Perennial-Grass***: 10-40% cover of blackbrush or other shrubs <1.0m tall, 5-20% exotic species (*Bromus rubens, Bromus tectorum*, *Erodium cicutarium*) cover; Joshua trees; ≥5% native grass cover
- *U-AG:* ***Annual Grass***: >10% exotic species (*Bromus rubens, Bromus tectorum*, *Erodium cicutarium*) cover; <10% cover of blackbrush or other shrubs; unburned and charred Joshua tree may be present
- *U-BG:* ***Bare ground***: mineral soil exposed by human disturbances

Reference Condition:

Natural Range of Variability

*A-**Early**:* 7%
*B-**Late-Closed**:* 93%
U: 0 %

Succession:

Succession follows the 2-box pathway with vegetation starting as predominantly dominated by snakeweed and herbaceous species and ending with blackbrush dominance.

- *Early-succession* to *late-succession* closed: 500 years

Natural Disturbances:

Very few natural disturbances affect thermic blackbrush: replacement fire and drought. Blackbrush is an ancient vegetation type whose individual plants resisted disturbances for hundreds of years (Pendleton et al. 1986). Moreover, blackbrush is not fire adapted and has not evolved with fire (Callison et al. 1985).

Replacement fire is present at very low rates in most classes. The fire return interval of *replacement fire* is 10,000 years (0.0001/year) in all reference classes. *Replacement fire* in vegetation classes that already experienced a threshold transition also cause a threshold transition to other uncharacteristic classes:

- The *shrub with mixed exotic annual and native perennial species* class (*SAP*) burns every 500 years (0.002/year) on average, causing a transition to the *annual grass species* class (*AG*). The *annual grass* class *(AG)* remains in that state without restoration.

A few anthropogenic disturbances cause accelerated woody succession in reference classes and some transitions to uncharacteristic classes of vegetation.

Managed herbivory has a return interval of one year (livestock is present every year) but different impact areas based on the distance livestock is willing to travel away from water. The impact of grazing is modeled with area limits, because grazing permits have fixed stocking rates, season of use, and distribution. It is assumed that *managed herbivory* utilizes 5% of all grazable areas; therefore, only 5% of the area is selected for *managed herbivory* and vegetation classes "compete" for selection. *Managed herbivory* allows all reference classes to remain in their respective classes as a self-loop, but relative age is advanced by one extra year for selected pixels in the *early-succession* class (*BT-A*) and by three years in the *late-succession closed* class (*BT-B*).

Annual grass invasion occurs across all classes at a rate of 0.005/year (1 out of 200 pixels per year). The *early-succession open* class *(BT-A)* transitions to the *annual grass* class (*AG)* before age 4 years and to *shrub with mixed annual and perennial* class *(SAP)* after 4 years. The *late-succession closed* class *(BT-B)* transitions to the *shrub with mixed annual and perennial* class *(SAP).*The *bare ground* class (*BG*) transitions to the *annual grass* class *(AG)*.

The *OHV* disturbance creates the *bare ground* class (*BG*) from illegal recreational use of off-highway vehicle. All classes are source classes. The rate is 0.001/year to reflect that users predominantly reuse existing disturbed areas and only incrementally add new areas of illegal driving.

Climate change conversion converted all classes to the creosote-white bursage biophysical setting system while remaining in the same class whether characteristic or uncharacteristic. In the Great Basin ecoregion, classes transition at a rate of 0.0053/year (188 years) to creosote-white bursage. This rate is increased to a rate of 0.005/year (200 years) in the Mojave ecoregion.

Literature from LANDFIRE Model Tracker:

Abella, S.R., D.J. Craig, L.P. Chiquoine, K.A. Prengaman, S.M. Schmid, and T.M. Embrey. Relationships of native desert plants with red brome (*Bromus rubens*): Toward identifying invasion-reducing species. Invasive Plant Science and Management 4:115-124.

Abella, S.R. and A.C. Newton. 2009. A systematic review of species performance and treatment effectiveness for revegetation in the Mojave Desert, USA. Pages 45-74 in A. Fernandez-Bernal and M.A. De La Rosa, eds. Arid Environments and Wind Erosion. Hauppauge, NY: Nova Science.

Abella, S.R., E.C. Engel, C.L. Lund, and J.E. Spencer. 2009.Early post-fire plant establishment on a Mojave

Desert burn. Madroño 56:137-148.
Beatley, J. C. 1976. Vascular plants of the Nevada Test Site and central-southern Nevada: Ecological and geographic distributions. Energy Research and Development Administration TID-26881. Technical Information Center, Office of the Technical Information, Springfield Virginia. 308 pp.
Biondi, F., Kozubowski. T.J., Panorska, A.K., and L. Saito. 2007. A new stochastic model of episode peak and duration for eco-hydro-climatic applications. Ecological Modelling 211:383-395.
Brooks, M. L. and J. R. Matchett. 2003. Plant community patterns in unburned and burned blackbrush (Coleogyne ramosissima Torr.) shrublands in the Mojave Desert. Western North American Naturalist 63: 283-298.
Brooks, M. L, T. C. Esque, and T. Duck, 2003. Fuels and fire regimes in creosotebush, blackbrush, and interior chaparral shrublands. Report for the Southern Utah Demonstration Fuels Project. USDA Forest Service. Rocky Mountain Research Station, Montana. 18 pp.
Callison, J., Brotherson, J.D. 1985. Habitat relationships of the blackbrush community (Coleogyne ramosissima) of southwestern Utah. Great Basin Naturalist 45:321–326.
Callison, J., Brotherson, J.D., Bowns, J.E. 1985. The effects of fire on the blackbrush [*Coleogyne ramosissima*] community of southwestern Utah. Journal of Range Management 38: 535–538.
DeFalco, L.A., D.R. Bryla, V. Smith-Longozo, and R.S. Nowak. 2003. Are Mojave Desert annual species equal? Resource acquisition and allocation for the invasive grass *Bromus madriensis* subsp. *Rubens* (Poaceae) and two native species. American Journal of Botany 90:1045-1053.
Haines, D. F., T. C. Esque, L. A. DeFalco, S. J. Scoles, M. L. Brooks, R. H. Webb. 2003. Fire and exotics in the Mojave Desert: an irreversible change? Available at http://www.dmg.gov/resto-pres/mon-08-haines.pdf.
Lei, S.A. 1997. Variation in germination response to temperature and water availability in blackbrush (*Coleogyne ramosissima*) and its ecological significance. The Great Basin Naturalist 57: 172–177.
Lei, S.A., Walker, L.R. 1997. Biotic and abiotic factors influencing the distribution of *Coleogyne* communities in southern Nevada. The Great Basin Naturalist 57: 163–171.
Lin, G., Phillips, S.L., Ehleringer, J.R. 1996. Monsoonal precipitation responses of shrubs in a cold desert community on the Colorado Plateau. Oecologia 106: 8–17.
McArthur, E.D., Sanderson, S.C. 1985. A cytotaxonomic contribution to the western North American Rosaceous flora. Madroño 32: 24–28.
Pendleton, B.K., S.E. Meyer, and R.L. Pendleton. 1996. Blackbrush biology: insights after three years of a long-term study. pp. 223-227 in Roundy, Bruce A., E. Durant McArthur, Jennifer S. Haley, David K. Mann, compilers. Proceedings: wildland shrub and arid land restoration symposium. Gen. Tech. Rep. INT-GTR-315. Ogden, UT: U.S. Department of Agriculture, Forest Service, Intermountain Research Station. 384 p. October 19-21, 1993. Las Vegas, NV.
Spaulding, W.G. 1990. Vegetation dynamics during the last deglaciation, southeastern Great Basin, U.S.A. Quaternary Research 33: 118–203.
Stebbins, G.L., Major, J. 1965. Endemism and speciation in the California flora. Ecological Monographs 35: 1–35.

State-and-Transition Model:

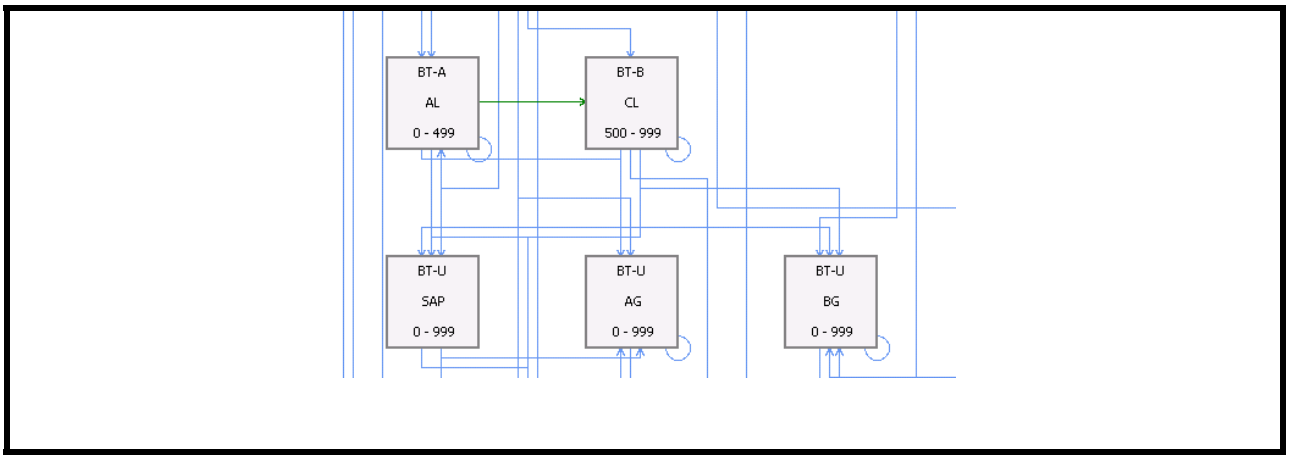
BT-A
AL
0 - 499
BT-B
CL
500 - 999
BT-U
SAP
0 - 999
BT-U
AG
0 - 999
BT-U
BG
0 - 999

Chaparral (CHp) 1104

Area of Application and Context:

- **State Wildlife Action Plan**
- **No livestock grazing**
- **Full fire suppression management**
- **Date created: 2011**

Vegetation classes:

- *A:* ***Early***: 10-100% cover of *Quercus turbinella, Quercus toumeyi, Cercocarpus montanus, Canotia holacantha, Ceanothus greggii* <3m tall; forbs abundant; 0-10 years
- *B*: ***Late-closed***: 50-100% cover of *Quercus turbinella, Quercus toumeyi, Cercocarpus montanus, Canotia holacantha, Ceanothus greggii* >3m tall; 10+ years
- U-*SAP:* ***Shrub-Annual-Perennial Grass***: >5% cheatgrass cover in spaces between shrubs; 10-100% cover of *Quercus turbinella, Quercus toumeyi, Cercocarpus montanus, Canotia holacantha, Ceanothus greggii* <3m tall; forbs abundant

Reference Condition:

- **Natural Range of Variability**
  - *A-**Early**:* 16%
  - *B-**Late-closed**:* 84%
  - *U*: 0%

Succession:

Succession follows the 2-box pathway with vegetation starting as predominantly dominated by resprouting (mostly from vegetative recolonization) and herbaceous species and ending with a sometimes diverse community of creosotebush (loamier soil) and/or white bursage (harsher, warmer soils). Succession is deterministic occur between the two reference classes:

- *Early-succession* to *late-succession closed*: 9 years

Natural Disturbances:

Replacement fire is the only natural disturbance that affects chaparral. *Replacement fire* in the reference classes has a mean return interval of 50 years (rate of 0.02/year) and returns all classes to the *early-succession* class (*CHp-A*). With the presence of cheatgrass, the fire return interval shortens to 40 years (0.025/year) in the *shrub with mixed annual and perennial grasses* class (*SAP*) and behaves as a selp-loop with age reset to zero.

The invasion by annual grasses *(annual-grass invasion)* in both reference classes causes a transition to

the *shrub with mixed annual and perennial grasses* class (*SAP*) with the pixels age maintained during transition. The rate is invasion is 0.005/year (1 out of 200 pixels per year).

Because chaparral species resprout or restablish from seed very rapidly and densely, they can displace cheatgrass from pixels and allow a *natural recovery* to the *late-succession closed* class (*CHp-B*) after 10 years. The rate of *natural recovery* is very slow: 0.0001/year (1 out of 10,000 pixels per year).

Literature from LANDFIRE Model Tracker:

Barbour, M. G., and J. Major, editors. 1977. Terrestrial vegetation of California. John Wiley and Sons, New York. 1002 pp.

Brooks, M. L, T. C. Esque, and T. Duck, 2003. Fuels and Fire Regimes in Creosotebush, Blackbrush, and Interior Chaparral Shrublands. Report for the Southern Utah Demonstration Fuels Project. USDA Forest Service. Rocky Mountain Research station, Montana. 18 pp.

Brooks, M. L., C. M. D'Antonio, D. M. Richardson, J. B. Grace, J. E. Keeley, J. M. DiTomaso, R. J. Hobbs, M. Pellant, and D. Pyke. 2004. Effects of invasives alien plants on fire regimes. BioSciences 54: 677-688.

Brooks, M. L. and J. R. Matchett. 2003. Plant communitiy patterns in unburned and burned blackbrush (Coleogyne ramosissima Torr.) shrublands in the Mojave Desert. Western North American Naturalist 63 (3) pp. 283-298.

Brown, D. E., editor. 1982. Biotic communities of the American Southwest-United States and Mexico. Desert Plants Special Issue 4(1-4):1-342.

Brown, J. K., and J. K. Smith, eds. 2000 Willdand fire in ecosystems: effects of fire on flora. Gen. Tech. Rep RMRS-GTR-42-vol.2. Odgen, UT; US Department of Agriculture, Forest Service, Rocky Mountain Research Station. 257 p.

Carmichael, R. S., O. D. Knipe, C. P. Pase, and W. W. Brady. 1978. Arizona chaparral: Plant associations and ecology. USDA Forest Service Research Paper RM-202. 16 pp.

Comer, P., D. Faber-Langendoen, R. Evans, S. Gawler, C. Josse, G. Kittel, S. Menard, M. Pyne, M. Reid, K. Schulz, K. Snow, and J. Teague. 2003. Ecological systems of the United States: A working classification of U.S. terrestrial systems. NatureServe, Arlington, VA.

Dick-Peddie, W. A. 1993. New Mexico vegetation: Past, present, and future. University of New Mexico Press, Albuquerque. 244 pp.

Holland, V. L., and D. J. Keil. 1995. California vegetation. Kendall/Hunt Publishing Company, Dubuque, IA. 516 pp.

MacMahon, J. A. 1988. Warm deserts. Pages 232-264 in M. G. Barbour and W. D. Billings, editors. North American terrestrial vegetation. Cambridge University Press, New York.

Thomas, K., J. Franklin, T. Keeler-Wolf, and P. Stine. 2003a. Mojave Desert Ecosystem Program: Central Mojave Vegetation Mapping Project. USGS Open-file Report. In press.

State-and-Transition Model:

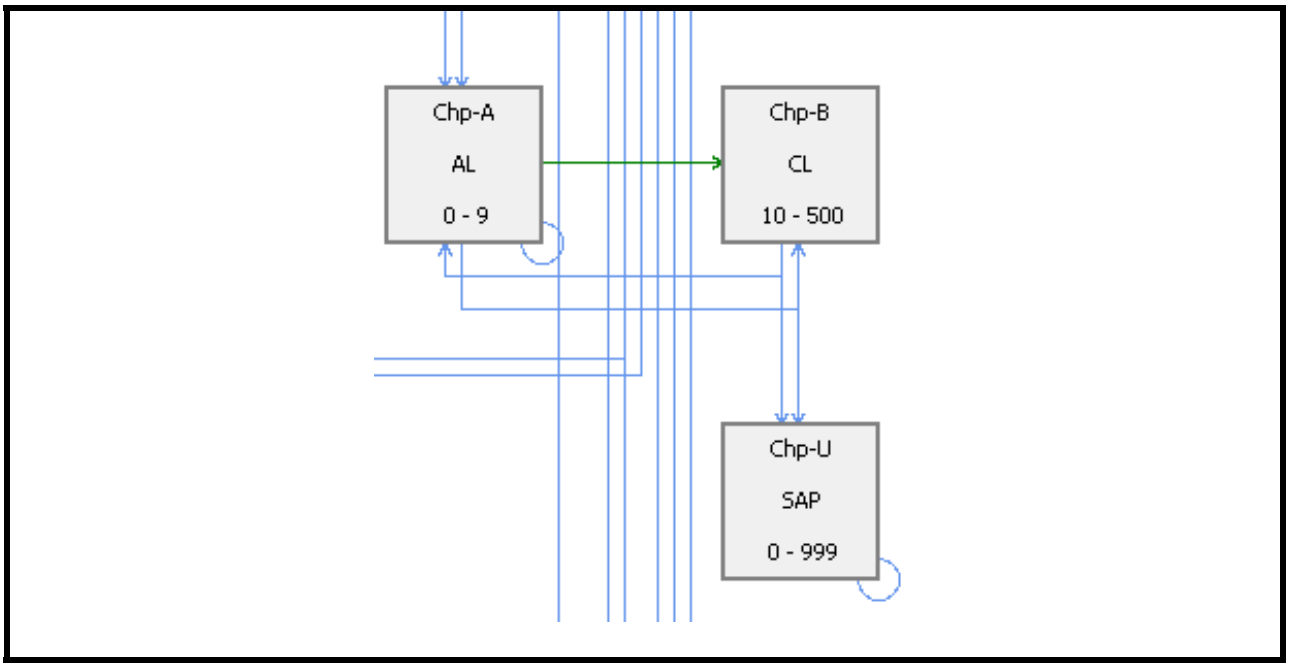
Chp-A
AL
0 - 9
Chp-B
CL
10 - 500
Chp-U
SAP
0 - 999

Creosotebush-White Bursage (CB) 1087

Area of Application and Context:

- **State Wildlife Action Plan**
- **Livestock grazing present in very few allotments, therefore livestock grazing was not an important part of this model (grazing leases retired in Desert Tortoise Management areas)**
- **Full fire suppression management**
- **Date created: 2011**

Vegetation classes:

Vegetation classes can include Joshua Tree Woodlands, but additional classes are not created just for Joshua trees. USDA's Natural Resource Conservation Service (NRCS) does not recognize Joshua tree woodlands as a distinct ecological site because the soils on which it grows are the same the soils as creosotebush-white bursage, thermic and mesic blackbrush, and Great Basin mixed salt desert ecological sites.

- *A: **Early***: 5-20% cover of creosote and white bursage builds up over time;5-20% grass cover depending on winter precipitation and season; 0-19 yrs
- *B*: ***Late-closed***: 21-40% creosote and white bursage cover; 5-20% grass and forb cover (depending on winter precipitation, soil productivity, and season); Joshua trees may be absent or common; 20+ yrs
- U-*SAP:* ***Shrub-Annual-Perennial Grass***: 21-40% cover of creosote and white bursage; 5-20% exotic species (*Bromus rubens, Bromus tectorum*, *Erodium cicutarium*) cover; 0% grass and forb cover (depending on winter precipitation, soil productivity, and season); Joshua trees may be present
- *U-AG:* ***Annual Grass***: >10% exotic annual species (*Bromus rubens, Bromus tectorum*, *Erodium cicutarium*) cover; <10% cover of creosotebush or other shrubs; unburned and charred Joshua tree may be present
- U-*BG:* ***Bare ground***: mineral soil exposed by human disturbances

Reference Condition:

- **Natural Range of Variability**
  - *A-**Early**:* 10%
  - *B-**Late-closed**:* 90%
  - *U*: 0%

Succession:

Succession follows the 2-box pathway with vegetation starting as predominantly dominated by resprouting (mostly from vegetative recolonization) and herbaceous species and ending with a sometimes diverse community of creosotebush (loamier soil) and/or white bursage (harsher, warmer

soils). Succession is deterministic occur between the two reference classes:

- *Early-succession* to *late-succession closed*: 20 years

Natural Disturbances:

Very few natural disturbances affect creosotebush-white bursage: drought and replacement fire. Creosotebush-white bursage has not evolved with fire.

Replacement fire is absent from reference classes, but present in classes invaded by exotic annual species

- *Replacement fire* in vegetation classes, which already experienced a threshold transition, causes a threshold transition to other uncharacteristic classes.
    - The *shrub with mixed exotic annual and native perennial species* classes (*SAP*) burns every 500 years (0.002/year) on average, causing a transition to the *annual grass class* (*AG*).
    - The *annual grass* class (*AG*), which contains recovering shrubs, self-burns every 20 years (0.05/year) on average.

Creosotebush is not as drought adapted as blackbrush is assumed to be. Drought is the strongest natural disturbance in this ecological system. A *drought* return interval rate of every 178 years (a rate of 0.0056/year) is used based on the frequency of severe drought intervals estimated by Biondi *et al*. (2007) from 2,300 years of western juniper (*Juniperus occidentalis)* tree ring data from the Walker River drainage of eastern California and western Nevada. Although we recognize that droughts may be more common than every 178 years, severe droughts, which are >7-year drought events with consecutive far-below average soil moisture (narrow tree rings), kill naturally drought resistant shrubs and trees:

- The *late-succession closed* class (*CB-B*) transitions to the *early-succession* class (*CB-A*).

A few anthropogenic disturbances cause accelerate woody succession in reference classes and transitions to uncharacteristic classes of vegetation.

Exotic annual species invasion (AG-Invasion) affects the reference (*CB-A*, *CB-B)* and *bare ground* (*BG*) classes at a rate of 0.005/year. For the *early-succession* class (*CB-A*), *exotic invasion* causes:

- Before age 19, a transition to the *exotic annual grassland* class (*AG*); and
- After and including age 19, the transition proceeds from the *late-succession closed* class (*CB-B)* to the *shrubs with mixed annual species and perennial grasses* class (*CB-SAP*).

The *OHV* disturbance creates the *bare ground* (*BG*) class from illegal recreational use of off-highway vehicles. All classes are source classes. The rate is 0.001/year to reflect that users predominantly reuse existing disturbed areas and only incrementally add new areas of illegal driving.

Climate change conversions (*CC-Conversion*) transforms the *early-succession* (*CB-A), annual grass* (*AG*), and the *bare ground* (*BG*) classes to warmer systems at a rate of 0.019/year;

- The *CB-A class* converts to Mixed Salt Desert (90% of times) and Paloverde-Mixed Cacti (10% of times);
- Both the *bare ground (BG)* and *annual grass* (*AG*) classes transform entirely into Mixed Salt Desert because the shrub structure is too destroyed to convert to paloverde-mixed cacti.

Literature from LANDFIRE Model Tracker:

Abella, S.R., D.J. Craig, L.P. Chiquoine, K.A. Prengaman, S.M. Schmid, and T.M. Embrey. Relationships of native desert plants with red brome (*Bromus rubens*): Toward identifying invasion-reducing species. Invasive Plant Science and Management 4:115-124.

Abella, S.R. and A.C. Newton. 2009. A systematic review of species performance and treatment effectiveness for revegetation in the Mojave Desert, USA. Pages 45-74 in A. Fernandez-Bernal and M.A. De La Rosa, eds. Arid Environments and Wind Erosion. Hauppauge, NY: Nova Science.

Abella, S.R., E.C. Engel, C.L. Lund, and J.E. Spencer. 2009. Early post-fire plant establishment on a Mojave Desert burn. Madroño 56:137-148.

Beatley, J. C. 1976. Vascular plants of the Nevada Test Site and central-southern Nevada: Ecological and geographic distributions. Energy Research and Development Administration TID-26881. Technical Information Center, Office of the Technical Information, Springfield Virginia. 308 pp.

Biondi, F., Kozubowski. T.J., Panorska, A.K., and L. Saito. 2007. A new stochastic model of episode peak and duration for eco-hydro-climatic applications. Ecological Modelling 211:383-395.

Brooks, M. L. and J. R. Matchett. 2003. Plant community patterns in unburned and burned blackbrush (Coleogyne ramosissima Torr.) shrublands in the Mojave Desert. Western North American Naturalist 63: 283-298.

Brooks, M. L, T. C. Esque, and T. Duck, 2003. Fuels and fire regimes in creosotebush, blackbrush, and interior chaparral shrublands. Report for the Southern Utah Demonstration Fuels Project. USDA Forest Service. Rocky Mountain Research Station, Montana. 18 pp.

Brown, D.E. and R.A. Minnich. 1986. Fire and creosote bush scrub of the western Sonoran Desert, California. American Midland Naturalist 116:411-422.

Brown, J. K., and J. K. Smith, eds. 2000 Wildland fire in ecosystems: effects of fire on flora. Gen. Tech. Rep RMRS-GTR-42-vol.2. Ogden, UT; US Department of Agriculture, Forest Service, Rocky Mountain Research Station. 257 p.

Callison, J., Brotherson, J.D. 1985. Habitat relationships of the blackbrush community (Coleogyne ramosissima) of southwestern Utah. Great Basin Naturalist 45:321–326.

Callison, J., Brotherson, J.D., Bowns, J.E. 1985. The effects of fire on the blackbrush [*Coleogyne ramosissima*] community of southwestern Utah. Journal of Range Management 38: 535–538.

DeFalco, L.A., D.R. Bryla, V. Smith-Longozo, and R.S. Nowak. 2003. Are Mojave Desert annual species equal? Resource acquisition and allocation for the invasive grass *Bromus madriensis* subsp. *Rubens* (Poaceae) and two native species. American Journal of Botany 90:1045-1053.

Haines, D. F., T. C. Esque, L. A. DeFalco, S. J. Scoles, M. L. Brooks, R. H. Webb. 2003. Fire and exotics in the Mojave Desert: an irreversible change? Available at http://www.dmg.gov/resto-pres/mon-08-haines.pdf.

Kuchler, A. W. 1964. Manual to accompany the map of potential natural vegetation of the conterminous United States. American Geographical Society. Spec. Publ. NO. 36. Lib. Congress Cat. Card Num. 64-15417

Lei, S.A. 1997. Variation in germination response to temperature and water availability in blackbrush (*Coleogyne ramosissima*) and its ecological significance. The Great Basin Naturalist 57: 172–177.

Lei, S.A., Walker, L.R. 1997. Biotic and abiotic factors influencing the distribution of *Coleogyne* communities in southern Nevada. The Great Basin Naturalist 57: 163–171.

Lin, G., Phillips, S.L., Ehleringer, J.R. 1996. Monsoonal precipitation responses of shrubs in a cold desert community on the Colorado Plateau. Oecologia 106: 8–17.

Marshall, K. A. 1995. Larrea tridentata. In: Fire Effects Information System, [Online]. U.S. Department of Agriculture, Forest Service, Rocky Mountain Research Station, Fire Sciences Laboratory (Producer). Available: http://www.fs.fed.us/database/feis/ [2006, January 24].

McArthur, E.D., Sanderson, S.C. 1985. A cytotaxonomic contribution to the western North American Rosaceous flora. Madroño 32: 24–28.Pendleton, B.K., S.E. Meyer, and R.L. Pendleton. 1995. Blackbrush biology: Insights after three years of a long-term study. In: Roundy, Bruce A.; McArthur, E. Durant; Haley, Jennifer S.; Mann, David K., comps. 1995. Proceedings: wildland shrub and arid land restoration symposium; 1993 October 19-21; Las Vegas, NV. Gen. Tech. Rep. INT-GTR-315. Ogden, UT: U.S. Department of Agriculture, Forest Service, Intermountain Research Station.

Spaulding, W.G. 1990. Vegetation dynamics during the last deglaciation, southeastern Great Basin, U.S.A. Quaternary Research 33: 118–203.

Stebbins, G.L., Major, J. 1965. Endemism and speciation in the California flora. Ecological Monographs 35: 1–35.

United States Department of Agriculture. 2002. Natural Resources Conservation Service, Nevada Rangeland Ecological Site Description. MLRA 30XA and 30XB. Reno State Office, NV.

Webb, R.H., Stielstra, S.S. 1979. Sheep grazing effects on Mojave Desert vegetation and soils. Environmental Management 3:517-529.

State-and-Transition Model:

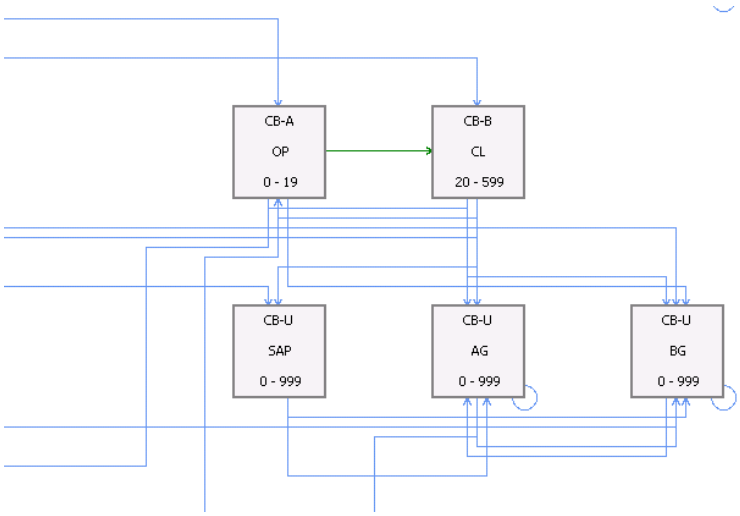

Curl-leaf Mountain Mahogany (MM) 1062

Area of Application and Context:

- **Nevada Wildlife Action Plan Revision**
- **Livestock grazing**
- **Fire suppression management**
- **Date created: 2011**

Vegetation classes:

- *A-**Early***: 10-55% cover mountain mahogany seedlings and saplings, 0-2m; mineral soil abundant; grasses and shrubs present but not abundant; 0-19 yrs
- *B-**Mid-Open***: 30-45% cover of mountain mahogany, mountain sagebrush, snowberry, and mountain snowberry 2-5m high; 60-59 yrs
- *C-**Mid-Closed***: 0-30% cover mountain mahogany 2-5m; mineral soil abundant; grasses and mountain sagebrush, snowberry, and mountain snowberry common; 20-59 yrs
- *D-**Late-Open***: 0-30% cover of mountain mahogany 5-25m; grasses and mountain sagebrush, snowberry, and mountain snowberry common; >60 yrs
- *E- **Late-Closed***: 30-55% cover of mountain mahogany, 5-25m; >49 yrs;
- *U-**TA: Tree-Annual-Grass***: 10-55% cover of mountain mahogany; 5-20% cheatgrass cover
- *U-**AG**: **Annual-Grasses***: 5-30% cheatgrass cover; <10% shrub cover

Reference Condition:

- **Natural Range of Variability**
  - *A-**Early**:* 7%
  - *B-**Mid-closed***: 11%
  - *C-**Mid-closed**:* 14%
  - *D-**Late-open**:* 10%
  - *E-**Late-closed**:* 58%
  - *U*: 0%

Succession:

Succession is the standard five-box model with a dominant closed canopy succession and a probabilistic alternate succession to represent the savanna pathway:

- Deterministic succession
  - *Early-succession* to *mid-succession open*: 19 years
  - *Mid-succession open* to *mid-succession closed*: 59 years
  - *Mid-succession closed* to *late-succession closed*: 149 years
- Alternate succession
  - *Mid-succession closed* to *late-succession open*: an alternate succession rate of 0.005/year is used to create the savanna class of curl-leaf mountain mahogany that

represents different site potential caused by sub-surface and above-surface bouldering in the soil.

Natural Disturbances:

Replacement fire is present in all classes. The mean fire return interval varies with succession:

- In reference classes, fire results in conversion to the *early-succession* class *(MM-A)*. The mean fire return interval is:
  - 500 years (0.002/year) for the *early-succession* class (*MM-A*) and *late-succession closed* class *(MM-E)*;
  - 143 years (0.007/year) for the *mid-succession open* class (*MM-B*) and *mid-succession closed* class *(MM-C)*;
  - 333 years (0.003/year) for the *late-succession open* class *(MM-D)*;
  - 500 years (0.002/year) for the *late-succession closed* class (*MM-E*).

- In the uncharacteristic classes, fire results in the *annual grass* class *(AG)*:
  - The *tree with annual grass* class *(TA)* burns with a mean return interval of 150 years (rate of 0.0067/year);
  - The *annual grass* class *(AG)* burns about every 10 years (rate of 0.1/year).

Surface fire had a return interval of 75 years (0.0133/year) that maintains the open savanna-like character of the *late-succession open* class (*MM-D*). The assumption is that fire from the surrounding mountain big sagebrush communities would be the source of this surface fire creeping among old curl-leaf mountain mahogany trees. Again, more research is needed to confirm the presence of *surface fire* given the great sensitivity of curl-leaf mountain mahogany to fire.

Native herbivory is an important disturbance earlier in succession because the seedlings and saplings of curl-leaf mountain mahogany are high in nitrogen and very palatable to small mammals and ungulates (Arno and Wilson, 1986; Schultz *et al*., 1996; Ross, 1999). The effect of *native herbivory* is to slow down succession through the full consumption of seedlings for selected pixels (thus resetting age to zero). In the *early-succession* class (*MM-A*), the rate of *native herbivory* assumes that herbivory is present every year with only 2% of the area experiencing removal of the seedlings and saplings (0.02/year).

Wild ungulate grazing affects the *mid-succession* classes, but effects are very small.

- The *mid-succession open* class *(MM-B)* is browsed at a rate of 0.01/year (100 years) but with no succession effects;
- The *mid-succession closed* class *(MM-C)* is browsed at a rate of 0.001/year (1,000 years), which shifts the age of the system back by one year to indicate a very small decease in cover.

Managed herbivory applies to the *early-succession* class *(MM-A)* and two open reference classes at a rate representing 5% of the grazable area in a phytoregion (this implementation rate represents an average stocking rate that overrides the 5%/year rate in the models). Except from years 2 to 4 of succession, *managed herbivory* is a self-loop that simply moves forward woody succession by one year when a pixel is selected to indicate that livestock preferentially selects herbaceous vegetation over woody vegetation. During the establishment of curl-leaf mountain mahogany and after a 2-year period

of rest from livestock, they can consume the highly palatable seedlings of curl-leaf mountain mahogany for an additional 2 years, and reset succession back to age zero.

Excessive herbivory only applies to the *early-succession open* class *(MM-A)* and after year 5 (when seedlings have grown), but at a decreased rate of 0.001/year (1,000 years). The difference is that it ages the class by 5 years within the same class. The rate of 0.001/year, however, is replaced by an implementation rate equal to 0.1% of the grazable are in the phytoregion shared among all vegetation classes (i.e., all grazable classes compete for livestock). The rate of *excessive herbivory* is low because its effects are localized to water sources and pathways close to water sources; therefore, a very small proportion of the landscape is affected.

Annual grass invasion (*AG-invasion*) is present in both late-succession classes at a rate of 0.001/year and causes a transition to the *tree with annual grass* class (*TA*). Annual invasion is tied to a base rate of 0.001/year estimated from data of northwest Utah collected by the Utah Division of Wildlife Resources in black sagebrush semi-desert. Black sagebrush semi-desert is usually considered resistant to cheatgrass invasion. We retained this rate because curl-leaf mountain mahogany is at higher elevations where native perennial grasses can out-compete cheatgrass and grows on harsh, shallow soils.

Alternate succession is present in the *late-succession open* class *(MM-D)*: The *late-succession open* class *(MM-D)* converts to the *late-succession closed* class *(MM-E)* at a rate of 0.33/year to 1.0 /year after 150 consecutive years without fire. The variation in the rate reflects slight model inconsistencies among phytoregions that have little effect on results.

Climate change conversions (CC-Conversion) occur in the *early-succession* class *(MM-A)* and the *annual grass* class *(AG)*. The recipient biophysical settings for each of those classes, each at 50%, are low-black sagebrush (*LBS-A* and *LBS-AG*) and Wyoming big sagebrush (*WS-A* and *WS-AG*).

Literature cited in LANDFIRE's Model Tracker:

Arno, S. F. and A. E. Wilson. 1986. Dating past fires in curl-leaf mountain-mahogany communities. Journal of Range Management 39:241-243.

Billings, W.D. 1994. Ecological impacts of cheatgrass and resultant fire on ecosystems in the western Great Basin. In: Proc. Ecology and management of annual rangelands. USDA USFS GTR-INT-313.

Brown, J. K. and J. K. Smith, eds. 2000. Wildland fire in ecosystems: effects of fire on flora. Gen. Tech. Rep. RMRS-GTR-42-vol. 2. Ogden, UT: U.S. Department of Agriculture, Forest Service, Rocky Mountain Research Station. 257 p.

Gruell, G., S. Bunting, and L. Neuenschwander. 1984. Influence of fire on curlleaf mountain mahogany in the Intermountain West. Proc. Symposium on fire's effects on wildlife habitat. Missoula, Montana.

Marshall, K.A. 1995. Cercocarpus ledifolius. In: Fire Effects Information System, [Online]. U.S. Department of Agriculture, Forest Service, Rocky Mountain Research Station, Fire Sciences Laboratory (Producer). Available: http://www.fs.fed.us/database/feis/ [2004, November 16].

Monsen, S. B. and E. D. Mc Arthur. 1984. Factors influencing establishment of seeded broadleaf herbs and shrubs following fire. Pp 112-124. In: K. Sanders and J. Durham (eds). Proc. Symp.: Rangelands fire effects. USDI Bureau of Land Management, Idaho Field Office, Boise, Idaho.

Natural Resources Conservation Service. 2003. Major land resource area 29. Southern Nevada Basin and Ragne. Ecological site descriptions. US Department of Agriculture.

Peters, E. F. and S. C. Bunting. 1994. Fire conditions pre- and post-occurrence of annual grasses on the Snake River plain. In: In: Proc. Ecology and management of annual rangelands. USDA USFS GTR-INT-313.

Ross, C. 1999. Population dynamics and changes in curlleaf mountain mahogany in two adjacent sierran and Great Basin mountain ranges. Pp. 111.

Schultz, B.W., R.J. Tausch, P.T. Tueller. 1996. Spatial relationships among young Cercocarpus ledifolius (curlleaf mountain mahogany). Great Basin Naturalist 56: 261-266.

Tausch, R. J., P. E. Wigand, and J. W. Burkhardt. 1993. Viewpoint: Plant community thresholds, multiple steady states, and multiple successional pathways: legacy of the Quaternary? Journal of Range Management 46:439-447.

Whisenant, S. G. 1990. Changing fire frequencies on Idaho's Snake River plains: Ecological and management implications. In: Proc. Symp., Cheatgrass Invasion, shrub die-off, and other aspects of shrub biology and management. USDS USFS INT 276, Ogden, Utah.

State-and-Transition Model (cropped):

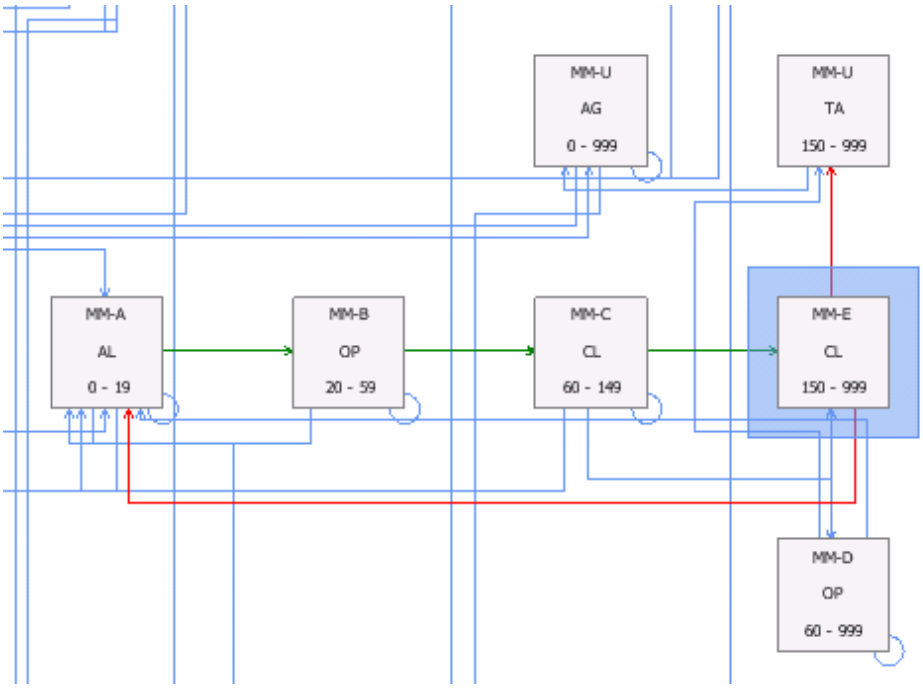

Greasewood (GR)

Area of Application and Context:

- **Nevada Wildlife Action Plan revision**
- **Marginal livestock grazing**
- **Full fire suppression management**
- **Date created: 2011**

Vegetation classes:

- A-***Early***: 0-20% herbaceous (inland saltgrass, bottlebrush squirreltail, and alkali sacaton) cover; <5% cover rabbitbrush and resprouting greasewood; 0-5 yrs
- B-***Late-closed***: 15-25% greasewood cover; <10% cover other shrubs (rabbitbrush, saltbushes, and budsage); <10% cover of grass (inland saltgrass, bottlebrush squirreltail, and alkali sacaton); >5 yrs
- U-*SA:* ***Shrub-Annual-Grass***: 5-25% cover of greasewood; 5-20% non-native grass cover
- U-*AG:* ***Annual-Grass***: 5-30% non-native annual grass cover; <10% shrub cover
- U-*SD:* ***Seeded***: 5-20% seeded native or introduced species cover

Reference Condition:

- **Natural Range of Variability**

A- ***Early***: 3%

B- ***Late-closed:*** *97%*

Succession:

Succession follows the 2-box pathway with vegetation starting as predominantly herbaceous and ending with greasewood, salt bushes and rabbitbrush dominance and a viable herbaceous understory.

- *Early-succession* to *late-succession open*: 5 years

Natural Disturbances:

Replacement fire restarts the succession clock at age zero within the reference condition, which was labeled the *early-succession* class or *GR-A*. The mean return interval of *replacement fire* from the *late-succession closed* class *(GR-B)* is 10,000 years (0.0001/year). Fire is naturally rare to absent in greasewood.

Replacement fire in vegetation classes that already experienced a threshold transition also causes a threshold transition to other uncharacteristic classes:

- With a fire return interval of 40 years (0.025/year), the *shrubland with mixed annual and perennial grasses* class (*SAP*) will become the *annual grass* class *(AG)*.
- *Replacement fire* in the *annual grass* class (*AG*) has a 10-year fire return interval (0.1/year) and acts as a self-loop.

Annual grass invasion (*AG-invasion*) is set at a moderate rate of 0.005/year (1 out of 200 pixels per year) resulting in the conversion to a cheatgrass-invaded class.

- The *early-succession open* class *(GR-A)* converts to the *annual grass* class *(AG)*; and
- The *late-succession closed* class *(GR-B)* and the *seeded* class *(SD)* convert to the *shrubs with mixed annual and perennial grass* class *(SAP)*.

Natural recovery occurs only in the *seeded* class at a rate of 0.001/year (1,000 years), where it converts to the *late-succession closed* class *(GR-B).* It is assumed that introduced species (for example Russian wheatgrass) are used in seedings

A *very wet year* only affects the *late-succession closed (GR-B) class* at a rate of 0.007/year (143 years) through root rot and root boring insect attacks when soils become water-logged during years of very high precipitation. This disturbance requires continuous inundations of greasewood flats for weeks, which happened is some parts of the Great Basin in 1983.

Literature from LANDFIRE Model Tracker:

Anderson, M. D. 2004. Sarcobatus vermiculatus. In: Fire Effects Information System, [Online]. U.S. Department of Agriculture, Forest Service, Rocky Mountain Research Station, Fire Sciences Laboratory (Producer). Available: http://www.fs.fed.us/database/feis/ [2005, March 17].

Blaisdell, J. P., and R. C. Holmgren. 1984. Managing intermountain rangelands-salt-desert shrub ranges. General Technical Report INT-163. USDA Forest Service, Intermountain Forest and Range Experiment Station, Ogden, UT. 52 pp.

Knight, D. H. 1994. Mountains and plains: Ecology of Wyoming landscapes. Yale University Press, New Haven, MA. 338 pp.

NRCS Ecological Site Description 29A & B, Sodic Dune and Flat.

West, N. E. 1983. Intermountain salt desert shrublands. Pages 375-397 in: N. E. West, editor. Temperate deserts and semi-deserts. Ecosystems of the world, Volume 5. Elsevier Publishing Company, Amsterdam.

State-and-Transition Model:

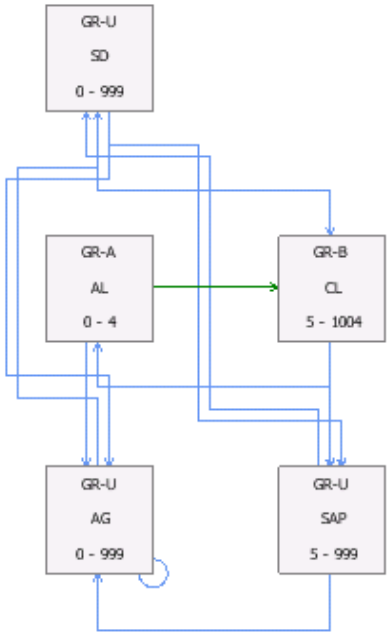
GR-U
SD
0 - 999
GR-A
AL
0 - 4
GR-B
CL
5 - 1004
GR-U
AG
0 - 999
GR-U
SAP
5 - 999

High Elevation Meadow (HEM)

Area of Application and Context:

- **Nevada Wildlife Action Plan revision**
- **Livestock grazing limited by season of use**
- **Full fire suppression management**
- **Date created: 2011**

Vegetation classes:

- A-***Early***: 20-60% cover of diverse tall forbs with a minor graminoid component (*Agastache* spp., *Chamerion* spp., *Erigeron* spp., *Senecio* spp., *Helianthella* spp., *Mertensia* spp., *Penstemon* spp., *Campanula* spp., *Hackelia* spp., *Lupinus* spp., *Solidago* spp., *Ligusticum* spp., *Osmorhiza* spp., *Thalictrum* spp., *Valeriana* spp., *Balsamorhiza* spp., *Wyethia* spp., *Bromus* spp, *Danthonia* spp., *Deschampsia* spp., *Koeleria* spp., *Elymus* spp., *Phleum* spp., and *Dasiphora* spp.); 40-80% fine textured soil; 0-4 years
- B-***Mid-closed***: 60-100% cover of diverse tall forbs with a minor graminoid component; <5% shrub cover; 5-9 years
- C-***Late-closed***: 5-10% shrub cover of *Populus tremuloides*, *Artemisia cana*, *Artemisia tridentata*, *Rosa woodsii*, *Ribes* spp., *Amelanchier* spp.; 90-95% cover of diverse tall forbs with a minor graminoid component; 10-300 years
- U-*UF:* ***Unpalatable Forb****:* >60% cover of uncharacteristic forbs usually dominated by *Wyethia* spp.
- U-*US:* ***Unpalatable Shrub***: > 60% cover of uncharacteristic shrubs dominated by *Artemisia cana* and *Rosa woodsii*

Reference Condition:

- **Natural Range of Variability**
  - A- **Early**: 5%
  - B- ***Mid-closed:*** 60%
  - C- ***Late-closed***: 35%
  - U- 0%

Succession:

Succession follows the 3-box pathway with vegetation starting as predominantly herbaceous and ending with some shrubs and trees, but primarily herbaceous.

- *Early-succession* to *mid-succession closed*: 4 years
- *Mid-succession closed* to *late-succession closed*: 10 years

Natural Disturbances:

Replacement fire restarts the succession clock at age zero within the reference condition, which is labeled the *early-succession* class or *HEM-A*. The mean return interval of *replacement fire* from *mid-succession closed* and *late-succession closed* classes *(HEM-B* and *HEM-C)* is 40 years (0.025/year).

Mixed fire only affects the *late-succession open* class *(HEM-C),* which thins woody vegetation (shrubs and small trees) back to the *mid-succession open* class (*HEM-B)* class at a return interval of 77 years (0.013/year).

Managed herbivory has a return interval of one year (livestock is present every year) but different impact areas based on the distance livestock is willing to travel away from water. The impact of grazing is modeled with area limits, because grazing permits have fixed stocking rates, season of use, and distribution. It is assumed that *managed herbivory* utilizes 5% of all grazable areas; therefore, only 5% of the area is selected for *managed herbivory* and vegetation classes "compete" for selection. *Managed herbivory* allows all reference classes to remain in their respective classes as a self-loop, but relative age is advanced by one extra year for selected pixels.

Excessive-herbivory affects all reference classes at a rate of 0.001/year (1,000 years). *Excessive herbivory* affects the same classes as *managed herbivory* at a rate of 0.001/year (1,000 years). The rate of 0.001/year, however, is replaced by an implementation rate equal to 0.1% of the grazable are in the phytoregion shared among all vegetation classes (i.e., all grazable classes compete for livestock). The rate of *excessive herbivory* is low because its effects are localized to water sources and pathways close to water sources; therefore, a very small proportion of the landscape is affected. *Excessive-herbivory* causes the following:

- The *early-succession open* class *(HEM-A)* remains as such, however the age of the class is reset to zero as livestock denude new herbaceous cover; and
- The *mid-succession open* class *(HEM-B)* and *late-succession open* class *(HEM-C)* convert to the *unpalatable forbs* class *(UF)* about 50% of events and to the *unpalatable shrubs* class *(US) for the remainder of events.*

Heavy *snow deposition* causes water logging in soils, which drowns woody vegetation in the *late-succession open* (*HEM-C*) class. *Snow deposition* has a return interval of 20 years (rate is 0.05/year) and only affects the *late-succession open* (*HEM-C*) class, which converts 50% to the *mid-succession open* class (*HEM-B),* while 50% is retained as the *late-succession open* class (*HEM-C),* but starting at age 23.

After 200 years of meadow succession, *tree encroachment* causes a permanent transition from *late-succession open* class *(HEM-C)* to the limber-bristlecone pine *early-succession open class (LB-A)* 50% of times and to the spruce-fir *early-succession open* class *(SF-A)* the remainder of times at a rate of 0.01/year.

Wild ungulate grazing has a quick transition rate of 1 year because wild ungulates grazed every year, however only a small percentage (3%) of the biophysical setting is affected per year:

- The *early-succession open* class (HEM-A) remains the same but succession is advanced by one additional year for selected pixels because herbivores chose herbaceous over woody vegetation.
- Similarly, the *mid-succession open* class (HEM-B) remains same but selected pixels advance by two additional years because the woody composition of the class increases with time.
- *Wild ungulate grazing* converts 3% of the *late-succession open* class *(HEM-C)* to the *unpalatable shrub* class *(US)*, which is often dominated by Wood's rose and silver sagebrush.

The c*limate change-conversion* causes the conversion of the *early-succession open* class (*HEM-A*), the *unpalatable shrub* class *(US)*, and the *unpalatable forbs* class *(UF)* to the mixed conifer *early-succession*

open class (*MC-A*) at a rate of 0.24 (4.2 years), but only from ages 0 and 1. Moreover, converted pixels enter the mixed conifer *early-succession open* class (*MC-A*) at age 2 (thus avoiding climate change conversion from mixed conifer between ages 0 to 1).

Literature from LANDFIRE Model Tracker:

Barrett, S. W. 1984. Fire history of the River of No Return Wilderness: River Breaks Zone. Final Report. Missoula, MT: Systems for Environmental Management. 40 p + appendices.

Fischer, W. C. and A. F. Bradley. 1987. Fire ecology of western Montana forest habitat types. Gen. Tech. Rep. INT-223. Ogden, UT: U.S. Department of Agriculture, Forest Service, Intermountain Research Station. 95 p.

Lotan, J. E., M. E. Alexander, S. F. Arno, [and others]. 1981. Effects of fire on flora: A state-of-knowledge review. National fire effects workshop; 1978 April 10-14; Denver, CO. Gen. Tech. Rep. WO-16. Washington, DC: U.S. Department of Agriculture, Forest Service. 71 p.

Lackschewitz, K. 1991. Vascular plants of west-central Montana--identification guidebook. Gen. Tech. Rep. INT-227. Ogden, UT:U.S. Department of Agriculture, Forest Service, Intermountain Research Station. 648 p.

Manning, M. E., and W. G. Padgett. 1995. Riparian Community Type Classification for Humboldt and Toiyabe National Forests, Nevada and Eastern California. U.S. Department of Agriculture, Forest Service, Intermountain Region.

Young, R. P. 1986. Fire ecology and management in plant communities of Malheur National Wildlife Refuge. Portland, OR: Oregon State University. 169 p. Thesis.

State-and-Transition Model:

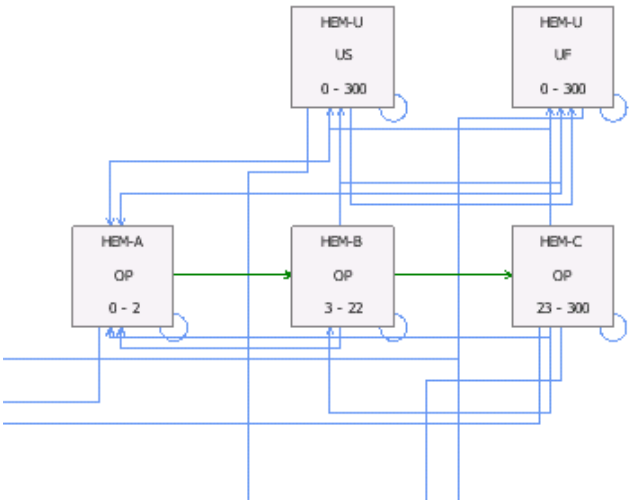

Jeffrey Pine (JP) 1031

Area of Application and Context:

- **Nevada Wildlife Action Plan revision**
- **Very limited livestock grazing**
- **Full fire suppression management**
- **Date created: 2011**

Vegetation classes:

- A- ***Early***: 0-60% cover of shrub/grass; conifer seedlings can be abundant <5m; 0-39 yrs
- B- ***Mid-closed***: 40-60% cover of Jeffrey pine, white fir and 5-10m; dense shrub cover possible; 40-159 yrs
- C- ***Mid-open***: 10-39% cover of Jeffrey pine; abundant shrub and grass cover; 40-159 yrs
- D- ***Late-open***: 10-39% cover of Jeffrey pine 11--50m; abundant shrub and grass cover; >160 yrs
- E- ***Late-closed:*** 40-80% cover of Jeffrey pine,11-50m; mountain snowberry common; ; >160 yrs
- U-*AG:* ***Annual-Grass***: >10% cheatgrass cover; trees largely absent; charred logs or standing dead trees often present; native grasses and forbs present to abundant
- *U-TA:* ***Tree-Annual-Grass***: 10-80% cover of young and older Jeffrey pine and white fir; >5% cheatgrass cover; native grass and shrubs present to abundant

Reference Condition:

- **Natural Range of Variability-** *only occurs in the Eastern Sierra Nevada and Sierra Nevada phytoregions*

  A- ***Early***: 18%
  B- ***Mid-closed:*** 4%
  C- ***Mid-open***: 27%
  D- ***Late-open:*** 50%
  E- ***Late-closed:*** 1%

Succession:

Succession follows the 3-box pathway with vegetation starting as predominantly herbaceous and ending with mature trees. There are three parallel succession pathways, although one is uncharacteristic because the fire ecology of cheatgrass and Jeffrey pine are assumed compatible.

- Open pathway
  - *Early-succession* to *mid-succession open*: 40 years
  - *Mid-succession open* to *late-succession open*: 160 years
- *Closed pathway*
  - *Mid-succession closed* to *late-succession closed*: 160 years
- Uncharacteristic pathway
  - *Annual grass (AG)* to *tree-annual-grass (TA)*: 40 years

Natural Disturbances:

Replacement fire occurs in all the classes and restarts the succession clock at age zero. Within the reference classes, replacement fire returns vegetation to the *early-succession open* class *(JP-A)* class. The mean return interval of *replacement fire* increases as the system ages and in open *versus* closed canopies as standing heavy fuels accumulate.

- The *early-succession open* class *(JP-A)* remains as such after burning with a mean fire return interval of 40 years (rate of 0.025/year), but vegetation restarts at age zero;
- The *mid-succession closed* class *(JP-B)* burns at a rate of 0.0136/year (74 years);
- The *late-succession open* class *(JP-C)* burns at a rate of 0.0042/year (238 years);
- The *late-succession open* class *(JP-D)* burns at a rate of 0.0014/year (714 years);
- The *late-succession closed* class *(JP-E)* burns at a rate of 0.0063/year (159 years);
  The *annual-grass* class *(AG)* remains the same after burning every 10 years on average (rate of 0.1/year), but vegetation restarts at age zero; and
- The *tree-annual-grass* class *(TA)* burns at a rate of 0.0067/year (150 years) and transitions to the *annual grass* class (AG).

Mixed fire has a varying effect on the system due to the patchy effects. For Jeffrey pine, we assume that mixed fire causes tree thinning 75% of times and stand replacement 25% of times (thus, a transition to the *early-succession open* class *[JP-A)]* for reference classes and the *annual-grass* class *(AG)* when the *tree-annual-grass* class *(TA)* burns*).* Only the thinning effects occurring 75% of times are described below.

- The *mid-succession closed* class *(JP-B)* converts to the *late-succession open class (JP-C)* at a rate of 0.0497/year (20 years) and the age of vegetation is maintained during the transition (i.e., only thinning of the midstory, fire-sensitive trees, and younger trees within the class);
- The *late-succession open* class *(JP-D)* burns at a rate of 0.0021/year (469 years) and vegetation remains in the class, but with a 10-year reversal of woody succession to indicate some minor thinning of trees in all age classes;
- The *late-succession closed* class *(JP-E)* converts to the *late-succession open* class *(JP-D)* at a rate of 0.0371/year (27 years) and the age of vegetation is maintained during the transition (i.e., only thinning of the midstory, fire-sensitive trees, and younger trees within the class);
- The *tree-annual-grass* class *(TA)* burns at a rate of 0.0067/year (150 years) and stays in the same class with no effect on succession age.

Surface fire only affects the *early-succession* class *(JP-A)* and open reference classes, and increases in frequency as the system ages. *Surface fire* has no effect on succession age. The closed classes have too much standing biomass and ladder fuels to allow surface fire without mixed severity effects.

- Surface fire thins young saplings within the *early-succession open* class *(JP-A)* at a rate of 0.0066/year (152 years);
- Surface fire thins saplings and young trees, especially fire-sensitive ones, within the *mid-succession open* class *(JP-C)* at a rate of 0.1/year (10 years); and
- Surface fire thins saplings and young trees, especially fire-sensitive ones, within the *late-succession open* class *(JP-D) at* a rate of 0.122/year (8 years).

The effect of *insect/disease* differs based on the age and canopy closure of vegetation classes. Closed canopies suffer from more insect and disease outbreaks, and younger trees are slightly more susceptible:

- The *mid-succession closed* class *(JP-B)* remains in this class *(JP-B)* 50% of times and converts to the *late-succession open class (JP-C)* the remainder of times*,* while maintaining vegetation age, at a rate of 0.005/year (200 years);
- The *late-succession open* class *(JP-C)* experiences minor single tree attacks at a rate of 0.002/year (500 years);
- The *late-succession open* class *(JP-D)* experiences minor single tree attacks at a low rate of 0.001/year (1,000 years); and
- The *late-succession closed* class *(JP-E)* converts to the *late-succession open class (JP-D)* 50% of times*,* while maintaining vegetation age, whereas the other 50% ofpixels stay in the *late-succession closed* class *(JP-E)* for a rate of 0.004/year (250 years).

Managed herbivory has a return interval of one year (livestock is present every year) but different impact areas based on the distance livestock is willing to travel away from water. The impact of grazing is modeled with area limits, because grazing permits have fixed stocking rates, season of use, and distribution. It is assumed that *managed herbivory* utilizes 5% of all grazable areas; therefore, only 5% of the area is selected for *managed herbivory* and vegetation classes "compete" for selection. *Managed herbivory* allows all reference classes and the *tree with annual grass* class (*TA*) to remain in their respective classes as a self-loop, but relative age is advanced by one extra year for selected pixels.

Excessive herbivory affects the same classes as *managed herbivory* at a rate of 0.001/year (1 out of 1,000 pixles per year). The rate of 0.001/year, however, is replaced by an implementation rate equal to 0.1% of the grazable are in the phytoregion shared among all vegetation classes (i.e., all grazable classes compete for livestock). The rate of *excessive herbivory* is low because its effects are localized to water sources and pathways close to water sources; therefore, a very small proportion of the landscape is affected. *Excessive herbivory* affects all reference classes and the *tree with annual grass* class (*TA*) by moving forward succession age by 5 years without class transitions.

The disturbance *competition/maintenance* reflects the effect of intra-specific competition by reversing the age of succession for the *early-succession open* class *(JP-A)* and *mid-succession closed* class *(JP-B)*, respectively, by 5 and 10 years at a rate of 0.01/year or (100 years).

Senescence only affects the *late-succession open* class *(JP-D) and late-succession closed* class *(JP-E)* by slowly killing off trees older than 400 years, thus resetting the system back to the *late-succession open* class *(JP-C)* and the *mid-succession closed* class *(JP-B*), respectively, at a rate of 0.01/year (100 years). Without *senescence*, trees will persist to ages beyong the species' natural longevity.

Annual grass invasion affects all reference classes with the exception of the *early-succession* class, where all classes are converted to the *trees with annual grass* class *(TA).*

- The *mid-succession closed* class *(JP-B*) and *late-succession closed* class *(JP-E)* convert at a rate of 0.0010/year (1,000 years); and
- The *late-succession open* class *(JP-C) and late-succession open* class *(JP-D)* convert at a rate of 0.0050/year (200 years).

Alternate-succession is a time-since-transition function and affects the *early-succession* and open classes at the same rate of 0.33 per year (3 years). Essentially, if a pixel has not experienced any fire for a fixed number of years, it transitions to the closed vegetation class of the same age.

- The *early-succession open* class *(JP-A)* converts to the *mid-succession closed class (JP-B)* if fire has not occurred for 38 years;
- The *late-succession open* class *(JP-C)* converts to the *mid-succession closed class (JP-B)* if fire has not occurred for 35 years;
- The *late-succession open* class *(JP-D)* converts to *late-succession closed* class *(JP-E)* if fire has not occurred for 100 years.

The c*limate change-conversion* causes the conversion of the *early-succession open* class *(JP-A)* and the *annual grass* class (AG) between ages 0 and 1.

- The *early-succession open* class *(JP-A)* converts evenly between the chaparral *early-succession open* class *(Chp-A), the* mountain mahogany *early-succession open* class *(MM-A),* and the pinyon-juniper *early-succession open* class *(PJ-A)* at a total rate of 0.15/year (7 years).

- The *annual grass* class *(AG)* converts evenly between the chaparral *annual grass* class *(Chp-AG),* the mountain mahogany *annual grass* class *(MM-AG),* and the pinyon-juniper *annual grass* class *(PJ-AG)* at a total rate of 0.15/year (7 years).

Literature from LANDFIRE Model Tracker:

Agee, J. K. 1990. The Historical Role of Fire In Pacific Northwest Forests. In: Walstad, J.K., Radosevich. S.R., and Sandberg, D.V. (editors). Natural and Prescribed Fire in Pacific Northwest Forests. Oregon State University Press, Corvallis, OR. P. 25-38.

Agee, J. K. 1991. Fire History Along an Elevational Gradient in the Siskiyou Mountains, Oregon. Northwest Science, Vol. 65, No. 4, 1991. p. 188-199.

Agee, J. K. 1993. Fire Ecology of Pacific Northwest Forests. Island Press, Washington D.C. 493 p.

Agee, J. K. 1994. Fire and Weather Disturbances in Terrestrial Ecosystems of the Eastern Cascades. Gen. Tech. Rep. PNW-GTR-320. Portland, OR: U.S. Department of Agriculture, Forest Service, Pacific Northwest Research Station. 37 p.

Anderson, H. E. 1982. Aids to Determining Fuel Models For Estimating Fire Behavior. Gen. Tech. Rep. INT-122. Ogden, UT: U.S. Department of Agriculture, Forest Service, Intermountain Forest and Range Experiment Station. 22 p.

Arno, S. F. 2000. Fire in western forest ecosystems. In: Brown, James K.; Kapler-Smith, Jane, eds. Wildland fire in ecosystems: Effects of fire on flora. Gen. Tech. Rep. RMRS-GTR-42-vol. 2. Ogden, UT: U.S. Department of Agriculture, Forest Service, Rocky Mountain Research Station: 97-120.

Arno, S. F., Scott, J. H., and Hartwell, M.G. 1995. Age-Class Structure of Old Growth Ponderosa Pine/Douglas-fir Stands and its Relationship to Fire History. Res. Paper INT-RP-481. Ogden, UT: U.S. Department of Agriculture, Forest Service, Intermountain Research Station: 25 p.

Arno, S. F., and Menakis, J. P. 1997. Fire Episodes in the Inland Northwest (1540-1940) Based on Fire History Data. Gen. Tech. Rep. INT-GTR-370. Ogden, UT: U.S. Department of Agriculture, Forest Service, Intermountain Research Station. 17 p.

Barrett, S. W. 2002. A fire regimes classification for Northern Rocky Mountain forests: Results from three decades of fire history research. Unpub. final report, Purchase Order No. 43-0385-1-0019; Planning Division, Flathead National Forest, Kalispell, MT. 38 p.

Bork, J. L. 1984. Fire History in Three Vegetation Types on the Eastern Side of the Oregon Cascades. PhD. Dissertation, Oregon State University. 56 p.

Brown, J. K., Smith, J. K., eds. 2000. Wildland fire in ecosystems: effects of fire on flora. Gen. Tech. Rep. RMRS-GTR-42-vol. 2. Ogden, UT: U.S. Department of Agriculture, Forest Service, Rocky Mountain

Research Station. 257 p.
Crane, M. F. 1982. Fire ecology of Rocky Mountain Region forest habitat types. Final report: Contract No. 43-83X9-1-884. Missoula, MT: U.S. Department of Agriculture, Forest Service, Region 1. 272 p. On file with: U.S. Department of Agriculture, Forest Service, Intermountain Research Station, Fire Sciences Laboratory, Missoula, MT.
Crane, M.F., and Fischer, W.C. 1986. Fire Ecology of the Forest Habitat Types of Central Idaho. Gen. Tech. Rep. GTR-INT-218. Ogden, UT: U.S. Department of Agriculture, Forest Service, Intermountain Research Station. 86 p.
Everett, R. L., Schellhaas, R., Keenum, D., Spurbecak, D., and Ohlson, P.. 2000. Fire history in the ponderosa pine/Douglas-fir forests on the east slope of the Washington Cascades. Forest Ecology and Management 129 (2000) 207-229.
Eyre, F. H., ed. 1980. Forest cover types of the United States and Canada. Washington, DC: Society of American Foresters. 148 p.
Franklin, J.F., and Dyrness, C.T. 1973. Vegetation of Oregon and Washington. Research Paper PNW-80. Portland, OR: U.S. Department of Agriculture, Forest Service, Pacific Northwest Forest and Range Experiment Station. 216 p.
Habeck, R. J. 1992. Pinus jeffreyi. In: Fire Effects Information System, [Online]. U.S. Department of Agriculture, Forest Service, Rocky Mountain Research Station, Fire Sciences Laboratory (Producer). Available: http://www.fs.fed.us/database/feis/ [2006, April 8].
Hall, Frederick C. 1980. Fire History – Blue Mountains, Oregon. Presented at: Fire History Workshop, University of Arizona, Tucson, AZ.
Hardy, Colin C., Kirsten M. Schmidt, James P. Menakis, R. Neil Samson. 2001. Spatial data for national fire planning and fuel management. Int. J. Wildland Fire. 10(3&4): 353-372.
Hessburg, P.F., Smith, B.G., Salter, R.B., Ottmar, R.D., and Alvarado, E. 2000. Recent changes (1930s-1990s) in spatial patterns of interior northwest forests, USA. Forest Ecology and Management 136 (2000) 53-83.
Johnson, C.G., and Simon, S.A. 1987. Plant Associations of the Wallowa-Snake Province. U.S. Forest Service Region 6 Ecological Technical Paper 255A-86.
Kilgore, B.M. 1981. Fire in ecosystem distribution and structure: western forests and scrublands. P. 58-89. In: H.A. Mooney et al. (Technical Coordinators). Proceedings: Conference on Fire Regimes and Ecosystem Properties, Honolulu, 1978. Gen. Tech. Rep. WO-GTR-26.
Kuchler, A.W. 1964. Potential Natural Vegetation of the Conterminous United States. American Geographic Society Special Publication No. 36. 116 p.
Manley, P. N., J. Fites-Kaufmann, M. G. Barbour, M. D. Schlesinger, and D. Rizzo. 2000. Chapter 5: Biological Integrity. Pp. 401-598, in: D. Murphy and C. Knopp, eds. Lake Tahoe Watershed Assessment, vol. I. General Technical Report PSW-GTR-175. USDA Forest Service Pacific Southwest Research Station, Albany, CA.
Maruoka, K.R. 1993. Fire History of Mixed-Conifer Stands in the Blue Mountains, Oregon and Washington. In: Proceedings, 12th Conference on Fire and Forest Meteorology, Jekyll Island, GA. P. 638-641.
McKenzie, D., Peterson, D. L., and Agee, J. K. 2000. Fire Frequency in the Interior Columbia River Basin: Building Regional Models from Fire History Data. Ecological Applications, 10(5), 2000. p. 1497-1516.
Morgan, P., and Parsons, R. 2001. Historical range of variability of forests of the Idaho Southern Batholith Ecosystem. Report to Boise Cascade Corporation, Boise, ID. 35 p.
Morrison, P. H., and Swanson, F. J. 1990. Fire History and Pattern in a Cascade Range Landscape. Gen. Tech. Rep. PNW-GTR-254. Portland, OR: U.S. Department of Agriculture, Forest Service, Pacific Northwest Research Station. 73 p.
Murphy, D. D.; Knopp, C. M., technical editors. 2000. Lake Tahoe Watershed Assessment: Volume I. Gen. Tech. Rep. PSW-GTR-175. Albany, CA: Pacific Southwest Research Station, Forest Service, US

Department of Agriculture; 753 p.
Norman, S.P. 2002. Legacies of anthropogenic and climate change in fire prone pine and mixed conifer forests of Northeastern California. Pennsylvania State University, Ph.D. dissertation. 207 pp.
Norman, S.P., and A.H. Taylor. 2003. Tropical and Pacific teleconnections influence fire regimes in pine-dominated forests of north-eastern California, USA. J. Biogeography 30:1081-1092.
Ogle, K., and DuMond, V. 1997. Historical Vegetation on National Forest Lands in the Intermountain Region. U.S. Department of Agriculture, Forest Service, Intermountain Region, Ogden, UT. 129 p.
Schmidt, K. M, Menakis, J. P., Hardy, C. C., Hann, W. J., Bunnell, D. L. 2002. Development of coarse-scale spatial data for wildland fire and fuel management. Gen. Tech. Rep. RMRS-GTR-87. Fort Collins, CO: U.S. Department of Agriculture, Forest Service, Rocky Mountain Research Station. 41 p. + CD.
Skinner, C.N., and C. Chang. 1996 Fire regimes, past and present. Pp. 1041-1069 in: Sierra Nevada Ecosystems Project: Final Report to Congress, vol. II. University of California-Davis, Centers for Water and Wildland Resources, Davis, CA. Smith, S.E. 1994. Ecological guide to eastside pine plant associations. Publication R5-ECOL-TP-004. USDA Forest Service Pacific Southwest Region, San Francisco, CA.
Skinner, C.N. Historical fire regime of the Blacks Mountain Experimental Forest. Unpublished data
Smith, J. K., Fischer, W.C. 1997. Fire Ecology of the Forest Habitat Types of Northern Idaho. Gen. Tech. Rep. INT-GTR-363. Ogden, UT: U.S. Department of Agriculture, Forest Service, Intermountain Research Station. 142 p.
Steele, R., Arno, S. F., and Geier-Hayes, Kathleen. 1986. Wildfire Patterns Change in Central Idaho's Ponderosa Pine-Douglas-fir Forest. Western Journal of Applied Forestry. Vol. 1. No. 1. p. 16-18.
Steele, R., Pfister, R. D., Ryker, R. A., Kittams, J. A. 1981. Forest Habitat Types of Central Idaho. Gen. Tech. Rep. INT-GTR-114. Ogden, UT: U.S. Department of Agriculture, Forest Service, Intermountain Research Station. 138 p. + map.
Taylor, A. 2004 Identifying Forest Reference Conditions on Early Cut-Over Lands, Lake Tahoe Basin, USA. Ecological Applications 14:1903-1920.
Taylor, A.H., Beaty R.M., 2005. Climatic influences on fire regimes in the northern Sierra Nevada mountains, Lake Tahoe Basin, Nevada, USA. *Journal of Biogeography* 32: 425–438
Thorne, J.H., Morgan, B.J., and Kennedy, J.A. 2008. Vegetation change over sixty years in the central Sierra Nevada, California, USA, Madrono 55:223-237.
Westerling, A. L.: "Climate Change Impacts on Wildfire," Chapter 12 in *Climate Change Science and Policy,* Schneider, Mastrandrea, and Rosencranz, Eds., Island Press. *in press*, (English edition)
Westerling, A.L. and B.P. Bryant, 2008: "Climate Change and Wildfire in California," Climatic Change 87: s231-249. DOI:10.1007/s10584-007-9363-z.
Westerling, A.L., Hidalgo H.G., Cayan D.R., Swetnam T.W., 2006. Warming and Earlier Spring Increase Western U.S. Forest Wildfire Activity. Science 313: 940 - 943.

State-and-Transition Model:

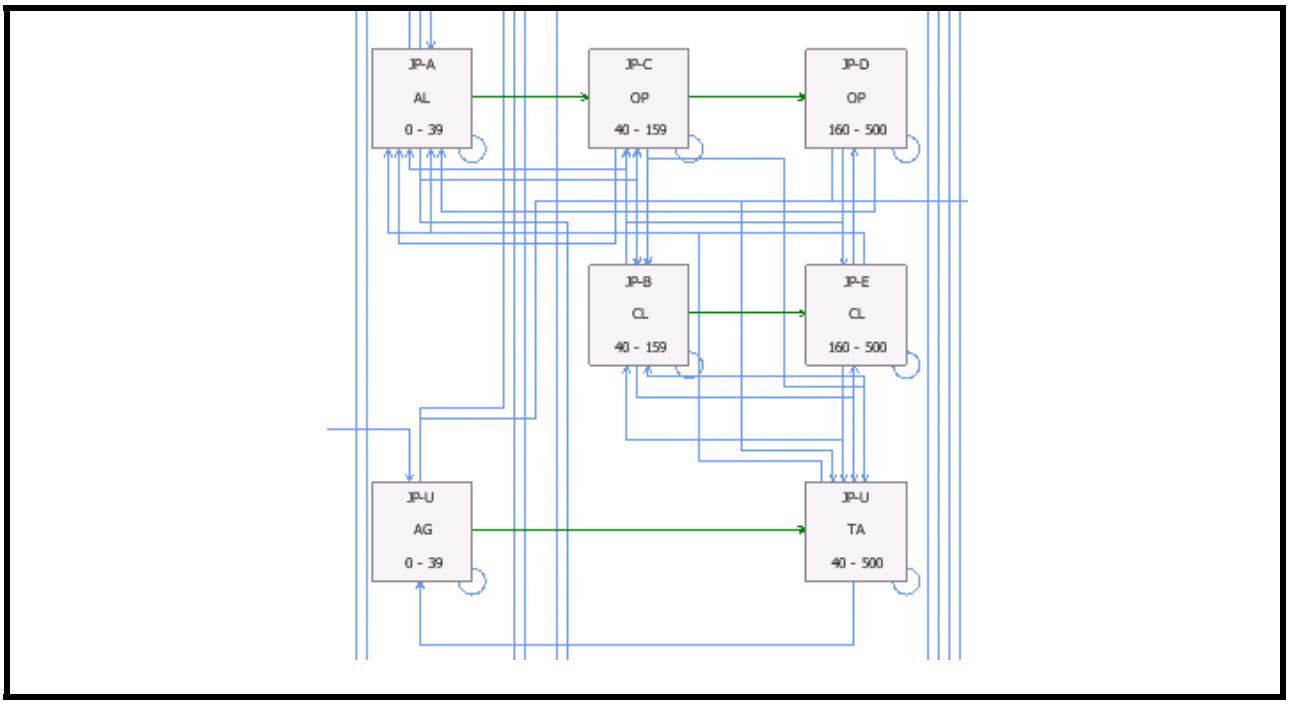
IP-A
AL
0 - 39
IP-C
OP
40 - 159
IP-D
OP
160 - 500
IP-B
CL
40 - 159
IP-E
CL
160 - 500
IP-U
AG
0 - 39
IP-U
TA
40 - 500

Juniper Savanna (JUN) 1115

Area of Application and Context:

- **Nevada Wildlife Action Plan revision**
- **No livestock grazing**
- **Full fire suppression management**
- **Date created: 2011**

Vegetation classes:

- A-***Early***: 10-30% cover of shrub/grass; 0-19yrs;
- B-***Mid-Open***: 10-30% cover big sage <0.5m tall; 10-40% herbaceous cover; 20-39 yrs;
- C-***Mid-Closed***: 10-40% shrub cover 0.5-1.0m tall; 11-30% cover of juniper <2m high; <20% herbaceous cover; 40-99 yrs;
- D-***Late-open***: 10-20% cover of juniper <5m tall; 10-20% shrub cover; <20% herbaceous cover; 100-399 yrs;
- E-***Late-Closed***: 21-40% cover of juniper <10m tall; 10-20% shrub cover; <20% herbaceous cover; >400 yrs;
- U-*AG:* ***Annual-Grass***: 10-30% non-native annual grass; <10% rabbitbrush or snakeweed cover; charred stumped of juniper evident;
- *U-TA:* ***Tree-Annual-Grass***: 10-40% cover of juniper; 10-20% shrub cover; <10% herbaceous cover; 5-20% cover of annual grass.

Reference Condition:

- **Natural Range of Variability**
  - A- **Early**: 3%
  - B- ***Mid-open:*** 4%
  - C- ***Mid-closed:*** 11%
  - D- ***Late-open:*** 50%
  - E- ***Late-closed:*** 33%
  - U- 0%

Succession:

Succession follows the 5-box pathway with vegetation starting as predominantly herbaceous and ending with old trees with drought adapted some shrubs and grasses.

- *Early-succession* to *mid-succession open*: 20 years
- *Mid-succession open* to *mid-succession closed*: 40 years
- *Mid-succession closed* to *late-succession open*: 100 years
- *Late-succession open* to *late-succession closed*: >400 years

Natural Disturbances:

Replacement fire occurs in all the reference classes and restarts the succession clock at age zero within the reference condition, which was labeled the *early*-succession *open* class *(JUN-A)* class. The frequency

of *replacement fire* decreases in the *late-succession* classes. *Replacement fire* also burns the *trees with annual grass class (TA)*.

- The *replacement fire* return interval, causing a transition (or self-loop) to the *early-succession open* class *(JUN-A*), is 303 years (or a rate of 0.0033/year) in the *early-succession open* class *(JUN-A*), m*id-succession open* class *(JUN-B*), and *mid-succession closed* class *(JUN-C*);
- The replacement fire return interval is 1,000 years (or a rate of 0.001/year) in the *late-succession open* class *(JUN-D*) and *late-succession closed class (JUN-E*).
- The fire return interval is 200 years (or 0.005/year) in the *trees with annual grass* class *(TA),* which becomes the *annual grass* class *(AG).* Sufficient build-up of cheatgrass fuels replacement fire.

Surface fire is only present in the *trees with annual grass* class *(TA)*, where fire is carried by cheatgrass cover. The fire return interval is long, 500 years (rate of 0.002/year), and does not affect the age of the selected pixels.

Drought only affects the *mid-succession* (*JUN-B, C*) and *late-succession* classes (*JUN-D, E*) at the same rate of 0.0056/year or 179 years. A *drought* return interval rate of every 179 years (a rate of 0.0056/year) is used based on the frequency of severe drought intervals estimated by Biondi *et al*. (2007) from 2,300 years of western juniper (*Juniperus occidentalis)* tree ring data from the Walker River drainage of eastern California and western Nevada. Although we recognize that droughts may be more common than every 179 years, severe droughts, which are >7-year drought events with consecutive far-below average soil moisture (narrow tree rings), kill naturally drought resistant shrubs and trees. As a rule of thumb applied to many ecological systems, we assumed 90% of self-thinning within the originating class (back to the beginning age of the class) and 10% thinning to the *mid-succession open class (JUN-B)*, which assumes the death of trees, but not of the understory shrubs and grasses:

- *The mid-succession closed* class *(JUN-C), late-succession open* class *(JUN-D),* and *late-succession open* class *(JUN-E)* convert 10% to the *mid-succession open class (JUN-B);*
- The *trees with annual grass* class *(TA)* converts 10% to the *annual grass class (AG)* and 90% stays in the *late-succession closed class (TA)*, but at the beginning age of the class.

Annual grass invasion affects all reference classes at the same rate of 0.001/year or 1,000 years*.* Invasion causes the following:

- *Early-succession open* class *(JUN-A*) converts to the *annual grass class (AG);*
- All other classes convert to the *trees with annual grass class (TA).*

Literature from LANDFIRE Model Tracker:

Alexander, R. R, F. Ronco, Jr. 1987. Classification of the forest vegetation on the National Forests of Arizona and New Mexico. Res. Note RM-469. Fort Collins, CO: U.S. Department of Agriculture, Forest Service, Rocky Mountain Forest and Range Experiment Station. 10 p.

Anderson, H. E. 1982. Aids to Determining Fuel Models For Estimating Fire Behavior. Gen. Tech. Rep. INT-122. Ogden, UT: U.S. Department of Agriculture, Forest Service, Intermountain Forest and Range Experiment Station. 22 p.

Arno, S. F. 2000. Fire in western forest ecosystems. In: Brown, James K.; Kapler-Smith, Jane, eds. Wildland fire in ecosystems: Effects of fire on flora. Gen. Tech. Rep. RMRS-GTR-42-vol. 2. Ogden, UT: U.S. Department of Agriculture, Forest Service, Rocky Mountain Research Station: 97-120.

Baker, W. L. and D. J. Shinneman. 2004. Fire and restoration of pińon-juniper woodlands in the western

United States. A review. Forest Ecology and Management 189:1-21.
Biondi, F., Kozubowski. T.J., Panorska, A.K., and L. Saito. 2007. A new stochastic model of episode peak and duration for eco-hydro-climatic applications. Ecological Modelling 211:383-395.
Blackburn, W. H., and P. T. Tueller. 1970. Pinyon and juniper invasion in black sagebrush communities in east-central Nevada. Ecology 51: 841-848.
Bradley, A. F., N. V. Noste, and W. C. Fischer. 1992. Fire Ecology of Forests and Woodlands in Utah. Gen. Tech. Rep. GTR- INT-287. Ogden, UT: U.S. Department of Agriculture, Forest Service, Intermountain Research Station. 127 p.
Brown, J. K. and J. K. Smith, eds. 2000. Wildland fire in ecosystems: effects of fire on flora. Gen. Tech. Rep. RMRS-GTR-42-vol. 2. Ogden, UT: U.S. Department of Agriculture, Forest Service, Rocky Mountain Research Station. 257 p.
Erdman, J. A. 1970. Pinyon-juniper succession after natural fires on residual soils of Mesa Verde, Colorado. Science Bulletin, Biological Series - -Volume XI, No. 2. Brigham Young University, Provo, UT. 26 p.
Everett, R. L. and K. Ward. 1984. Early Plant Succession on Pinyon-Juniper Controlled Burns. Northwest Science 58:57-68.
Eyre, F. H., ed. 1980. Forest cover types of the United States and Canada. Washington, DC: Society of American Foresters. 148 p.
Goodrich, S. and B. Barber. 1999. Return Interval for Pinyon-Juniper Following Fire in the Green River Corridor, Near Dutch John, Utah. In: USDA Forest Service Proceedings RMRS-P-9.
Gruell, G. E. Historical and Modern Roles of Fire in Pinyon-Juniper. In: Proceedings, USDA Forest Service RMRS-P-9. p. 24-28.
Gruell, G. E., L. E. Eddleman, and R. Jaindl. 1994. Fire History of the Pinyon-Juniper Woodlands of Great Basin National Park. Technical Report NPS/PNROSU/NRTR-94/01. U.S. Department of Interior, National Park Service, Pacific Northwest Region. 27 p.
Hardy, C. C., K. M. Schmidt, J. P. Menakis, R. N. Samson. 2001. Spatial data for national fire planning and fuel management. Int. J. Wildland Fire. 10(3&4):353-372.
Hessburg, P. F., B. G. Smith, R. B. Salter, R. D. Ottmar., and E. Alvarado. 2000. Recent changes (1930s-1990s) in spatial patterns of interior northwest forests, USA. Forest Ecology and Management 136:53-83.
Kilgore, B. M. 1981. Fire in ecosystem distribution and structure: western forests and scrublands. P. 58-89. In: H.A. Mooney et al. (Technical Coordinators). Proceedings: Conference on Fire Regimes and Ecosystem Properties, Honolulu, 1978. Gen. Tech. Rep. WO-GTR-26.
Kuchler, A. W. 1964. Potential Natural Vegetation of the Conterminous United States. American Geographic Society Special Publication No. 36. 116 p.
Ogle, K. and V. DuMond. 1997. Historical Vegetation on National Forest Lands in the Intermountain Region. U.S. Department of Agriculture, Forest Service, Intermountain Region, Ogden, UT. 129 p.
Ott, J., E., E. D. McArthur, and S. C. Sanderson. 2001. Plant Community Dynamics of Burned and Unburned Sagebrush and Pinyon-Juniper Vegetation in West-Central Utah. In: Proceedings, USDA Forest Service RMRS-P-9. p. 177-190.
NatureServe. 2004. International Ecological Classification Standard: Terrestrial Ecological Classifications. Terrestrial ecological systems of the Great Basin US: DRAFT legend for Landfire project. NatureServe Central Databases. Arlington, VA. Data current as of 4 November 2004.
Romme, W. H., L. Floyd-Hanna, and D. Hanna. 2002. Ancient Pinyon-Juniper forests of Mesa Verde and the West: A cautionary note for forest restoration programs. In: Conference Proceedings – Fire, Fuel Treatments, and Ecological Restoration: Proper Place, Appropriate Time, Fort Collins, CO, April 2002. 19 p.
Schmidt, K. M., J. P. Menakis, C. C. Hardy, W. J. Hann, and D. L. Bunnell. 2002. Development of coarse-scale spatial data for wildland fire and fuel management. Gen. Tech. Rep. RMRS-GTR-87. Fort Collins,

CO: U.S. Department of Agriculture, Forest Service, Rocky Mountain Research Station. 41 p. + CD.
Soule', P. T. and P. A. Knapp. 1999. Western juniper expansion on adjacent disturbed and near-relict sites. Journal of Range Management 52:525-533.
Soule', P. T. and P. A. Knapp. 2000. Juniperus occidentalis (western juniper) establishment history on two minimally disturbed research natural areas in central Oregon. Western North American Naturalist (60)1:26-33.
Stein, S. J. 1988. Fire History of the Paunsaugunt Plateau in Southern Utah. Great Basin Naturalist. 48:58-63.
Tausch, R. J. and N. E. West. 1987. Differential Establishment of Pinyon and Juniper Following Fire. The American Midland Naturalist 119(1). P. 174-184.
U.S. Department of Agriculture, Forest Service, Rocky Mountain Research Station, Fire Sciences Laboratory (2002, December). Fire Effects Information System, [Online]. Available: http://www.fs.fed.us/database/feis/ [Accessed: 11/15/04].
Ward, K. V. 1977. Two-Year Vegetation Response and Successional Trends for Spring Burns in the Pinyon-Juniper Woodland. M.S. Thesis, University of Nevada, Reno. 54 p.
Wright, H. A., L. F. Neuenschwander, and C. M. Britton. 1979. The role and use of fire in Sagebrush-Grass and Pinyon-Juniper Plant Communities. Gen. Tech. Rep. INT-GTR-58. Ogden, UT: U.S. Department of Agriculture, Forest Service, Intermountain Research Station. 48 p.
Young, J. A., and R. A. Evans. 1978. Population Dynamics after Wildfires in Sagebrush Grasslands. Journal of Range Management 31:283-289.
Young, J. A., and R. A. Evans. 1981. Demography and Fire History of a Western Juniper Stand. Journal of Range Management 34:501-505.

State-and-Transition Model:

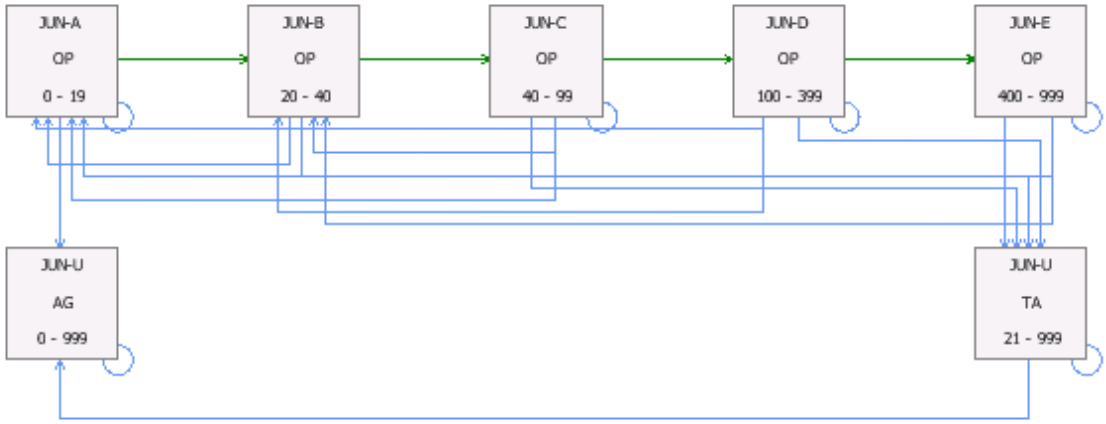

Limber Bristlecone (LB) 1020

Area of Application and Context:

- **Nevada Wildlife Action Plan revision**
- **No livestock grazing**
- **Full fire suppression management**
- **Date created: 2011**

Vegetation classes:

- A-***Early***: 0-10% limber and bristlecone pine cover 0-5m high; abundant mineral soil or talus cover; sparse ground cover; 0-99 yrs;
- B-***Mid-Open***: 11-30% limber and bristlecone pine cover 5-10m high; abundant mineral soil or talus cover; sparse ground cover; 100-249 yrs;
- C-***Late-open***: very old trees; 11-30% limber and bristlecone pine cover 5-25m high; abundant mineral soil or talus cover; sparse ground cover; >250 yrs

Reference Condition:

- **Natural Range of Variability**
  A. **Early**: 10%
  B. ***Mid-open:*** 13%
  C. ***Late-open:*** 77%

Succession:
Succession follows the 3-box pathway with vegetation starting as predominantly herbaceous and ending with ancient trees.

- *Early-succession* to *mid-succession open*: 99 years
- *Mid-succession* open to *late-succession open*: 250 years

Natural Disturbances:

Replacement fire occurs in all the reference classes and restarts the succession clock in the *early-succession open* class *(LB-A)* at age zero within the reference condition at a rate of 0.001 (1,000 years).

Surface fire affects all reference classes.

- The *early-succession open* class *(LB-A*) converts to the *early-succession* class *(LB-A)* at a rate of 0.001 (1,000 years);
- The *mid-succession open* class *(LB-B*) converts to the *mid-succession open* class *(LB-B)* at a rate of 0.002 (500 years).

The effect of *drought* is only felt in the *early-succession* class, where the system shifts back in age by 5 years at a frequency of 179 years (0.0056/year). This minor reversal of succession is a simple and arbitrary process to stunt growth.

Temperature affects the system similarly as *drought* with the same frequency of 179 years (0.0056/year), however it affects all the reference classes, and shifts the age of the classes forward by

one extra year to show that subalpine conifers are cold-limited (Salzer et al. 2009).

The c*limate change-conversion* only causes the conversion of the *early-succession open* class *(LB-A)* where it converts evenly between mixed conifer *early-succession open* class *(MC-A)* and mountain mahogany *early-succession open* class *(MM-A)* at a rate of 0.97 (1 year).

Literature cited:

Biondi, F., Kozubowski. T.J., Panorska, A.K., and L. Saito. 2007. A new stochastic model of episode peak and duration for eco-hydro-climatic applications. Ecological Modelling 211:383-395.

Howard, J. L. 2004. Pinus longaeva. In: Fire Effects Information Systems [Online]. USDA, Forest Service, Rocky Mountain Research Station, Forest Sciences Lab (Producer). Available: http://www.fs.fed.us/database/feis [2005, February 23].

Johnson, K. A. 2001. Pinus flexilis. In: Fire Effects Information System [Online]. USDA, Forest Service, Fire Sciences Lab (Producer). Available: http://www.fs.fed.us/database/feis [2005, February 23].

Little, E. L. 1971. Atlas of United States Trees:Volume 1, Conifers and Important Hardwoods. USDA Forest Service, Misc. Pub. 1146, Washington, DC.

Salzer M.W., M.K. Hughes, A.G. Bunn, and K.F. Kipfmueller. 2009. Recent unprecedented tree-ring growth in bristlecone pine at the highest elevations and possible causes. Proceedings of the National Academy of Sciences U S A. 106:20348-20353.

Steele, R. in: Burns, R. M., and B. H. Honkala, tech coords. 1990. Silvics of North America: 1. Conifers. Agriculture Handbook 654. U.S. Department of Agriculture, Forest Service, Washington, DC. Vol 2, 877 p.

State-and-Transition Model:

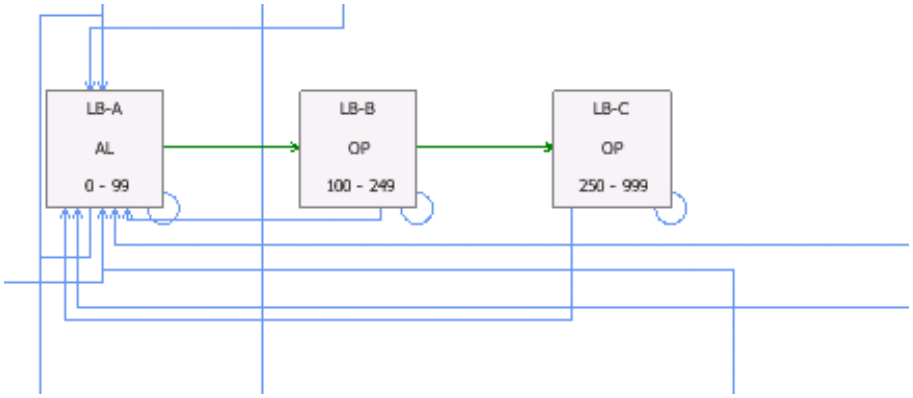

Low-Black Sagebrush (LBS) 1079

Area of Application and Context:

- **Nevada Wildlife Action Plan Revision**
- **Livestock grazing**
- **Fire suppression management**
- **Date created: 2011**

Vegetation classes:

- A-***Early***: 10% cover rabbitbrush; 10-40% cover of grass; 50-80% cover mineral soil; 0-25 yrs;
- *B-**Mid-Open***: 10-20% cover of black sagebrush or low sagebrush and rabbitbrush; 10-30% grass cover; <40% cover of mineral soil; 25-119 yrs;
- *C-**Late-Closed***: 20-30% cover of black sagebrush or 10-30% cover of low sagebrush; 10-30% cover of grasses; 1-10% pinyon-juniper sapling cover; 120-194 yrs;
- *D-**Late-Open***: 10-30% cover of mature pinyon or juniper on black sagebrush sites or 5-20% cover of mature pinyon or juniper on low sagebrush sites; <10% black sagebrush or 5-20% cover of low sagebrush; <10% grass cover; >195 yrs
- *U-TE: **Tree encroached***: >20% pinyon or juniper cover on black sagebrush sites or >10% pinyon or juniper cover on low sagebrush sites 10m; >5% cover of annual grass; <5% shrub cover; <5% herbaceous cover;
- *U-DP***: *Depleted***: 20-50% cover of black sagebrush or 10-30% cover of low sagebrush; <5% native herbaceous cover; <10% pinyon or juniper sapling cover;
- *U-SAP*: ***Shrub-Annual-Grass-Perennial-Grass***: 20-50% cover of black sagebrush or 10-30% cover of low sagebrush; >5% cover of native grass; 5-20% cheatgrass cover; <10% pinyon or juniper sapling cover
- *U-SA*: ***Shrub-Annual-Grass***: 20-50% cover of black sagebrush or 10-30% cover of low sagebrush; <5% cover of native grass; 5-20% cheatgrass cover; <10% pinyon or juniper sapling cover
- *U-ES: **Early*-Shrub**; 10-40% cover rabbitbrush species;
- *U-TA: **Tree-Annual-Grass**:* >20% pinyon or juniper cover on black sagebrush sites or >10% pinyon or juniper cover on low sagebrush sites 10m; >5% cover of annual grass; <5% shrub cover; <5% herbaceous cover
- *U*-SD**: *Seeded***: 5-20% cover of native or non-native (crested wheatgrass, forage kochia) seed mix; ≤5% cover of annual grass;
- *U*-AG**: *Annual Grass***: 10-30% cover of cheatgrass.

Reference Condition:

- **Natural Range of Variability**

A- ***Early**:* 17%
B- ***Mid-open**:* 46%
C- ***Late-closed**:* 25%
D- ***Late-open**:* 12%

U- 0%

Succession:

Succession has a primary deterministic path followed by a probabilistic succession in the last step in this four-box model:

- *Deterministic*
  - *Early-succession* to *mid-succession open*: 25 years
  - *Mid-succession open* to *late-succession open*: 119 years
- *Probabilistic*
  - *Late-succession open* to *late-succession closed*: starts at age 120 years controlled by an increasing rate of pinyon-juniper invasion: 0.001/year from 120 to 149 years and 0.005/year after 150 years. It is assumed that grass cover slows down establishment of tree seedlings from ages 120- 149 years at a rate of 0.001/year to *late-succession open* class (*LBS-D)*. At ages 150-300 years, the loss of grass cover accelerates tree seedling establishment up to 0.005/year to *late-succession open* class *(LBS-D)*. At transition, the age of the vegetation is 121 years in the *late-succession open* class regardless of the age of shrubs. These staged rates intend to approximately replicate encroachment levels proceeding in three phases of about 50 years (Miller and Tausch 2001).

Natural Disturbances:

Replacement fire is found in nearly all classes. In the reference pathway, the fire return interval ranges from 250 years (0.004/year) in the *early-succession* class (*LBS-A*) to 150 years (0.0067/year) in the *mid* and *late-succession* classes, where they return to the *early-succession open* class (*LBS-A).* Fire in the *early-succession* class (*LBS-A)* is a self-loop that returns to age zero. In the uncharacteristic classes, the mean fire return interval ranges from 10 years (rate of 0.1/year) in the *annual grass* class *(AG)*, 100 years (0.01/year) in the *shrub with annual grass* class *(SA)*, to 150 years (0.0067/year) in all other classes.

- Fire in the *annual grass* class *(AG)* behaves as a self-loop with age being reset at zero;
- The *shrub with annual grass (SA)* and the *tree with annual grass (TA)* classes convert to the *annual grass* class *(AG);*
- The *depleted* (DP) and *tree encroached (TE)* classes convert to the *early shrub* class *(ES);*
- Thirty percent of the *shrubs with mixed annual and perennial grass* class *(SAP)* converts to the *early-succession* class (*LBS-A*) and the remaining 70% converts to the *annual grass* class *(AG).*

Drought affects all classes except the *annual grass (AG)* and *early shrub (ES)* classes. A *drought* return interval rate of every 179 years (a rate of 0.0056/year) is used based on the frequency of severe drought intervals estimated by Biondi *et al*. (2007) from 2,300 years of western juniper (*Juniperus occidentalis)* tree ring data from the Walker River drainage of eastern California and western Nevada. Although we recognize that droughts may be more common than every 179 years, severe droughts, which are >7-year drought events with consecutive far-below average soil moisture (narrow tree rings), kill naturally drought resistant species. Drought has the following effects:

- *The early-succession* class *(LBS-A*) remains as such and it is assumed that drought causes a very small (-1 year) reversal in woody succession by killing young sagebrush;
- Fifty percent of the *mid-succession open* class *(LBS-B*) converts to the *early-succession open* class *(LBS-A)*, whereas the rest is thinning within the class back to its beginning age;
- In all other classes, drought thins 10% of pixels to a younger vegetation classes (killing older vegetation) and 90% of pixels stay within the originating class (self-loop), but older individuals are killed and the age of the class returns to its beginning age. Next we only describe the fate of the 10%:

    - The *late-succession closed* class *(LBS-C*) converts to the *mid-succession open* class *(LBS-B);*
    - The *late-succession open* class *(LBS-D*) converts to the *late-succession closed* class *(LBS-C)*.
    - The *shrub with annual grass (SA)* and *tree with annual grass (TA)* classes convert to the *annual grass* class *(AG)*;
    - The *tree-encroached (TE)* and *depleted (DP)* classes convert to the *early shrub* class *(ES)*;
    - The *shrub with mixed perennial and annual grass* class *(SAP)* converts 5% to the *annual grass* class *(AG)* and the *early-succession* class *(LBS-A*);

Managed herbivory applies to the *early-succession (LBS-A), mid-succession open (LBS-B), late-succession closed* (*LBS-C*) classes, and *shrub with mixed annual and perennial grass* class *(SAP)* at a rate representing 5% of the grazable area in a phytoregion (this implementation rate represents an average stocking rate that overrides the 5%/year rate in the models). In all cases, *managed herbivory* is a self-loop that simply moves forward woody succession by one year when a pixel is selected.

Excessive herbivory applies to the same classes as for managed herbivory where it affects the system at a rate of 0.001/year (1,000 years). The rate of 0.001/year, however, is replaced by an implementation rate equal to 0.1% of the grazable are in the phytoregion shared among all vegetation classes (i.e., all grazable classes compete for livestock). The rate of *excessive-herbivory* is low because its effects are localized to water sources and pathways close to water sources; therefore, a very small proportion of the landscape is affected.

- The *early-succession (LBS-A*) and *mid-succession open (LBS-B*) classes converts to the *early shrub* class *(ES);*
- In the *late-succession closed* class *(LBS-C),* it is retained in the same class in a self-loop, due to a forward age shift of 5 years; and
- The *shrub with annual and perennial grass* class *(SAP)* converts to the *shrub with annual and grass* class (SA).

Annual grass invasion affects all reference classes converting them each to an uncharacteristic class and also causes a transition in one uncharacteristic class without cheatgrass. The vegetation's age of an un-invaded class is preserved during transition. A base rate of 0.001/year (1 out of 1,000 pixels per year) was estimated from data of northwest Utah collected by the Utah Division of Wildlife Resources in black sagebrush semi-desert. Black sagebrush semi-desert is usually considered more resistant to cheatgrass invasion than Wyoming big sagebrush semi-desert or other big sagebrush dominated biophysical settings.

- The *early-succession* class *(LBS-A*) converts to the *annual grass* class *(AG)* at a rate of 0.0001/year over the age of 0 to 9 years. This very low rate indicates that invasion is possible, but very rare because the abundance of native grasses after a stand replacing event presents invasion due to interspecific competition;
- The *early-succession* class *(LBS-A*) converts to the *shrubs with mixed annual and perennial grass* class *(SAP)* at a rate of 0.001/year over the age of 10 to 24 years. It is assumed here that interspecific grass competition decreases as shrub cover and bare ground increase;
- The *mid-succession open* class *(LBS-B)* and *late-succession closed* class *(LBS-C)* convert to the *shrubs with mixed annual and perennial grass* class *(SAP),* and the *late-succession open* class *(LBS-D)* converts to the *tree annual grass* class *(TA)* at a rate of 0.005/year. Cheatgrass most readily invades these classes because native grass cover is lower, bare ground is abundant, and the litter below the canopy of shrubs and trees provides nutrients for cheatgrass germination and growth; and
- The *tree-encroached* class *(TE)* converts to the *tree annual grass* class *(TA)* at a rate of 0.005/year.

Tree invasion is described above under probabilistic succession. This disturbance also applies to the *depleted (DP), shrubs with mixed annual and perennial grass (SAP), and shrubs with annual grass (SAP)* classes after 120 years of age. The *depleted* class *(DP)* converts to the *tree encroached* class *(TE)*, whereas the *shrubs with mixed annual and perennial grass (SAP)* and *shrubs with annual grass (SAP)* classes convert to the *tree annual grass* class *(TA)* at a rate of 0.005/year (200 years).

Tree encroachment only affects the *late-succession open* class *(LBS-D)* where it converts to the uncharacteristic *tree encroached* class *(TE)* at a rate of 0.02/year (50 years) after 250 years of succession. This assumes that pinyon and juniper have effectively suppressed the understory grasses, forbs, and shrubs.

Climate change-conversion varies based on the phytoregion. In the Columbia Plateau and Great Basin phytoregion the *early-succession open* class *(LBS-A)* converts to mixed salt desert *early-succession* class *(MSD-A)* at a rate of 0.13 during the first year of succession only. In the Mojave phytoregion, the *early-succession open* class *(LBS-A)* converts to mixed salt desert *early-succession* class *(MSD-A)* at the same rate. In the Eastern Sierra Nevada phytoregion, 99% of *LBS-A* converts to mixed salt desert *early-succession* class *(MSD-A)* and remainder converts to blackbrush mesic *early-succession* class *(BM-A)* at the same rate.

Literature Cited

Biondi, F., Kozubowski. T.J., Panorska, A.K., and L. Saito. 2007. A new stochastic model of episode peak and duration for eco-hydro-climatic applications. Ecological Modelling 211:383-395.

Chambers, J. C. and Miller, J. editors. 2004. Great Basin riparian areas: ecology, management, and restoration. Society for Ecological Restoration International, Island Press. Pp 24-48.

Blackburn, W. H. and P. T. Tueller. 1970. Pinyon and juniper invasion in black sagebrush communities in east-central Nevada. Ecology 51(5):841-848.

Miller, R. F. and J. A. Rose. 1999. Fire history and western juniper encroachment in sagebrush steppe. Journal of Range Management 52:550-559.

USDA-NRCS 2003. Ecological site descriptions for Nevada. Technical Guide Section IIE. MLRAs 28B, 28A, 29, 25, 24, 23.

Young, J. A., and R. A. Evans. 1978. Population Dynamics after Wildfires in Sagebrush Grasslands. Journal of Range Management 31:283-289.

Young, J. A., and R. A. Evans. 1981. Demography and Fire History of a Western Juniper Stand. Journal of Range Management 34:501-505.

Young, J. A. and D. E. Palmquist. 1992. Plant age/size distributions in black sagebrush (Artemisia nova): effects on community structure. Great Basin Naturalist 52(4):313-320.

Ratzlaff, T. D. and J. E. Anderson. 1995. Vegetal recovery following wildfire in seeded and unseeded sagebrush steppe. Journal of Range Management 48:386-391.

Zamora, B. and P. T. Tueller. 1973. Artemisia arbuscula, A. longiloba, and A. nova habitat types in northern Nevada. Great Basin Naturalist 33: 225-242.

State and Transition Model:

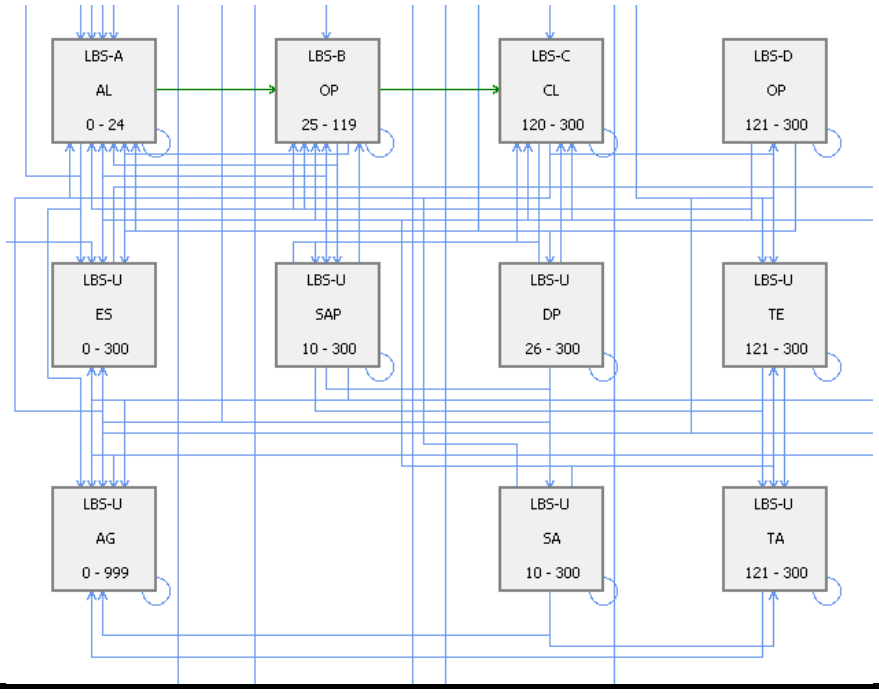

Lower Elevation Grassland (LEG) 1139

Area of Application and Context:

- **Nevada Wildlife Action Plan Revision**
- **Livestock grazing**
- **Fire suppression management**
- **Date created: 2011**

Vegetation classes:

- A-***Early***: 10-30% grass cover (*Festuca idahoensis*, *F. compestris*, *Pseudoroegneria spicata*, *Koeleria macratha*); 0-10% cover of forbs (*Colinsia* spp., *Lupinus* spp., *Epilobium* spp., *Balsamorhiza* spp., *Geum* spp., *Potentilla* spp.); 0-4 yrs;
- *B-**Mid-Closed***: 41-80% cover of grass; 10-20% forb cover; shrubs present but low stature; 5-64 yrs;
- *C-**Late-Open***: 11-20% shrub cover (*Symphoricarpus alba* and *Rosa* spp.); 41-80% grass cover; <10% forb cover; >65 yrs;
- *U-AG: **Annual Grass***: 5-30% cheatgrass cover; <5% shrub cover; native tree cover <5%
- *U-ES: **Early-Shrub***:10-40% cover rabbitbrush species;
- *U-SAP***: Shrub-Annual-Grass-Perennial-Grass**: >20% shrub cover; >5% annual grass; <40% herbaceous cover; mineral soil common;
- *U-TA: **Tree-Annual-Grass**:* >5% pinyon, juniper cover, or montane conifer; shrub herbaceous cover variable but usually >20%; <41% native grass cover; annual grass may be present, especially under the canopy of trees.

Reference Condition:

- **Natural Range of Variability**
  - *A-**Early**:* 7%
  - *B-**Mid-closed**:* 61%
  - *C-**Late-open***: 32%
  - *U*: 0 %

Succession:

Succession is simple in this three-box model:

- *Early-succession* to *mid-succession closed*: 4 years
- *Mid-succession closed* to *late-succession open*: 64 years

Natural Disturbances:

Replacement fire is found in all classes.

- All reference classes burn back to age 0 of the *early-succession open* class *(LEG-A):*

- The *early-succession open* class *(LEG-A)* burns with a mean fire return interval of 100 years (rate of 0.01/year);
- The *mid-succession closed* class *(LEG-B)* burns with a mean fire return interval of 40 years (rate of 0.025/year);
- The *late-succession open* class *(LEG-C)* burns with a mean fire return interval of 77 years (rate of 0.0130/year).

- The fates of uncharacteristic classes are more complicated:

  - Replacement fire acts as a self-loop in the *annual grass* class (*AG*) and the *early shrub* class *(ES)* burning, respectively, with mean fire return intervals of 10 years (rate of 0.1/year) and 75 years (rate of 0.013/year);
  - The *shrubs with annual grass* class *(SA)* and 50% of the *tree-encroached* class *(TE)* convert to the *annual-grass* class (*AG*) following, respectively, mean fire return intervals of 75 years (rate of 0.013/year) and 120 years (rate of 0.0084/year).
  - Fifty percent of the *tree-encroached* class *(TE)* converts to the *early shrub* class *(ES)* at a mean fire return interval of 120 years (0.0084/year).

Drought affects the *late-succession open* class *(LEG-C), shrubs with annual grass* class *(SA),* and *tree-encroached* class *(TE).* A *drought* return interval rate of every 179 years (a rate of 0.0056/year) was used based on the frequency of severe drought intervals estimated by Biondi *et al*. (2007) from 2,300 years of western juniper (*Juniperus occidentalis)* tree ring data from the Walker River drainage of eastern California and western Nevada. Although we recognize that droughts may be more common than every 179 years, severe droughts, which are >7-year drought events with consecutive far-below average soil moisture (narrow tree rings), will kill naturally drought resistant species. Drought thins 10% of pixels to a younger vegetation classes (killing older vegetation) and 90% of pixels stay within the originating class (self-loop), but older individuals are killed and the age of the class returns to its beginning age. Next we only describe the fate of the 10%:

- The *late-succession open* class *(LEG-C)* converts to the *early-succession open* class *(LEG-A);*
- The *shrubs with annual grass* class *(SA)* converts to the *annual grass* class *(AG);* and
- Fifty percent of the *tree-encroached* class *(TE)* converts to the *annual grass* class *(AG)* and 50% to the *early shrub* class *(ES).*

Managed herbivory applies to the *early-succession (LEG-A), mid-succession closed (LEG-B), late-succession open (LEG-C)* classes at a rate representing 5% of the grazable area in a phytoregion (this implementation rate represents an average stocking rate that overrides the 5%/year rate in the models). In all cases, *managed herbivory* is a self-loop that simply moves forward woody succession by one and three years, respectively, when a pixel is selected in the *early-succession (LEG-A)* and *mid-succession closed (LEG-B)* classes (one year), and the *late-succession open* class *(LEG-C)*.

Excessive herbivory applies to same classes as *managed herbivory* where it causes a transition to the *early shrub* class *(ES),* with the age of vegetation preserved, at a rate of 0.001/year. The rate of 0.001/year, however, is replaced by an implementation rate equal to 0.1% of the grazable are in the phytoregion shared among all vegetation classes (i.e., all grazable classes compete for livestock). The rate of *excessive herbivory* is low because its effects are localized to water sources and pathways close to water sources; therefore, a very small proportion of the landscape is affected.

Annual grass invasion affects all reference classes by converting them to uncharacteristic classes at a

rate of 0.005/year (200 years). A base rate of 0.001/year was estimated from data of northwest Utah collected by the Utah Division of Wildlife Resources in black sagebrush semi-desert. Black sagebrush semi-desert is usually considered more resistant to cheatgrass invasion than Wyoming big sagebrush semi-desert or other big sagebrush dominated biophysical settings. We assume that the low-elevation grassland are as productive as the big sabrush communities.

- The *early-succession open (LEG-A)* and *mid-succession closed (LEG-B)* classes convert to the *annual grass* class *(AG)* with the age of vegetation preserved*;*
- The *late-succession open* class *(LEG-C)* converts to *shrubs mixed with annual grass* class *(SA).*

Tree encroachment only affects the *late-succession open* class *(LEG-C)* where it converts to the uncharacteristic class *tree encroached (TE)* at a rate of 0.01/year (100 years) after 150 years of succession.

Literature cited in LANDFIRE's Model Tracker:

Agee, J.K. 1994. Fire and weather disturbances in terrestrial ecosystems of the eastern Cascades. Gen. Tech. Rep. PNW-GTR-320. Portland OR: USDA, Forest Service 52pp.

Daubenmire, R. 1970. Steppe vegetation of Washington. Was. Agric. Exp. Stn. Tech. Bull. 62, 131 ppp., illus.

Franklin, J.F. and C.T. Dyrness. 1988. Natural vegetation of Oregon and Washington. Oregon State University Press, 452 pp.

Whitlock, C., and M.A. Knox c. 2002. Prehistoric burning in the Pacific Northwest: human versus climatic influences. Fire, native peoples, and the natural landscape. Washington, D.C. Island Press.

State-and-Transition Model:

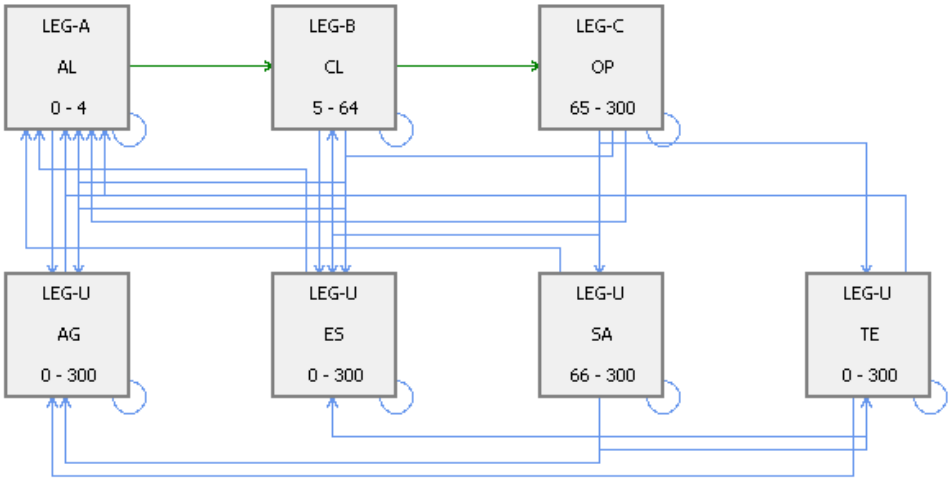

Low Sagebrush Steppe (LSS) 1126

Area of Application and Context:

- **Nevada Wildlife Action Plan.**
- **Livestock grazing limited to seasonal subalpine use.**
- **Full fire suppression management.**
- **Date created: July 2011**

Vegetation classes:

- A-***Early***: 15-25% herbaceous cover (bluebunch wheatgrass, Thurber's needlegrass); 0-10% cover of rabbitbrush; 0-25 yrs
- *B*-***Mid-open***: 11-20% cover of low sagebrush and mountain snowberry; 15-25% herbaceous cover (bluebunch wheatgrass, Thurber's needlegrass); 25-99 yrs
- *C*-***Late-Closed***: 21-30% cover of low sagebrush and Utah serviceberry; 10-15% herbaceous cover (bluebunch wheatgrass); >100 yrs
- *U*-***DP*: *Depleted***: 10-30% cover of low sagebrush; <5% herbaceous cover; <10% pinyon or juniper sapling cover
- *U*-***ES: Early*-Shrub**: 10-40% cover rabbitbrush species
- *U*-***TE: Tree Encroached****:* >10% pinyon, juniper cover, or montane-subalpine conifer; <5% shrub cover; <5% native herbaceous cover; annual grass usually absent

Reference Condition:

- **Natural Range of Variability**
  - *A*-***Early***: 24%
  - *B*-***Mid-open***: 56%
  - *C*-***Late-closed***: 20%
  - *U*: 0%

Succession:

Succession is simple in this three-box model:

- *Early-succession* to *mid-succession open*: 24 years
- *Mid-succession open* to *late-succession closed*: 99 years

Natural Disturbances:

Replacement fire was found in all classes, except the *depleted* class *(DP)*. In the reference pathway where fire causes a conversion to the *early-succession* class (*LS-A*) at age zero, the fire return interval ranges from 250 years (0.004/year) in the *early-succession* class (*LS-A*), to 91 years (0.011/year) and 67 years (0.015/year), respectively, in the *mid-succession open* (*LS-B*) and *late-succession closed* class (*LS-C*). Replacement fire occurs in the uncharacteristic *early-shrub (ES)* and *tree-encroached (TE)* classes. Fine fuel is insuffcient in the *depleted* class *(DP)* to carry fire. Fire in uncharacteristic classes converts vegetation to the *early shrub* class *(ES)*: the rate is 0.004/year (250-year mean fire return interval) in the

tree-encroached class *(TE)* and 0.005/year (200-year mean fire return interval) in the *early-shrub* class *(ES)*.

Drought affects all reference classes and the uncharacteristic *depleted (DP)* and *tree-encroached (TE)* classes. A *drought* return interval rate of every 179 years (a rate of 0.0056/year) is used based on the frequency of severe drought intervals estimated by Biondi *et al*. (2007) from 2,300 years of western juniper (*Juniperus occidentalis)* tree ring data from the Walker River drainage of eastern California and western Nevada. Although we recognize that droughts may be more common than every 179 years, severe droughts, which are >7-year drought events with consecutive far-below average soil moisture (narrow tree rings), kills naturally drought resistant species.

Drought slows succession by weakly reversing it by one year increments for all chosen pixels in the *early-succession* class (*LS-A*) and for 80% of pixels in the *mid-succession open* (*LS-B*) and *late-succession closed* (*LS-C*) classes. This weak effect is arbitrary and simply translates to a slowdown in an otherwise very drought tolerant sagebrush species. Drought in the remaining 20% of these last two classes causes stand-replacement. Drought kills already drought-stressed trees in the *tree-encroached* class *(TE)*: vegetation transitions to the *mid-succession open* class *(LS-B)* if drought hits between ages 200 and 249 years, but converts to the *depleted* class *(DP)* after 250 years of age to indicate that trees have suppressed the understory after 50 years of occupation. In the *depleted* class *(DP)*, drought thins within the class to its beginning age for 90% of pixels selected, whereas the remaining 10% converts to the *early-shrub* class *(ES)*.

Managed herbivory applies to the *early-succession (LS-A), mid-succession open (LS-B), late-succession closed (LS-C)* classes at a rate representing 5% of the grazable area in a phytoregion (this implementation rate represents an average stocking rate that overrides the 5%/year rate in the models). In all cases, *managed herbivory* is a self-loop that simply moves forward woody succession by one year when a pixel is selected to indicate that livestock preferentially selects herbaceous vegetation over woody vegetation.

Excessive herbivory affects the same classes as *managed herbivory* at a rate of 0.001/year (1,000 years). The rate of 0.001/year, however, is replaced by an implementation rate equal to 0.1% of the grazable are in the phytoregion shared among all vegetation classes (i.e., all grazable classes compete for livestock). The rate of *excessive herbivory* is low because its effects are localized to water sources and pathways close to water sources; therefore, a very small proportion of the landscape is affected. In the *early-succession* class, *excessive herbivory* shifts the age of the class forward by 5 years to represent accelerated woody succession. The *mid-succession* and *late-succession* classes (*LS-B* and *C)* are converted to the *depleted* class *(DP)* as livestock nearly completely remove perennial grasses and their seed bank becomes depleted.

Tree encroachment only affects the *late-succession closed* class *(LS-C)*, which converts to the *tree encroached* class *(TE)* at a small rate of 0.001 (1,000 years). This process is special in low sagebrush steppe because the clay soils of this biophysical setting are very resistant to conifer establishment; therefore, even a small cover of trees is considered encroachment and tree canopy is always open. Historically, it is assumed that tree cover was low and seed sources infrequent at landscape scale; therefore, the likelihood that one seed would establish in low sagebrush was remote. Therefore, tree encroachment in low sagebrush steppe has a different meaning than in other sagebrush systems because the very open tree canopy allows the understory grasses and shrubs to persist, albeit at reduced levels. The drought tolerant low sagebrush is assumed to outlast grasses with competition from trees.

Tree-invasion only applies to the *depleted* class *(DP)*: after 100 years of succession, trees establish at the small rate of 0.001/year and vegetation becomes the *tree-encroached* class *(TE)*. In this case, grass cover is largely absent, whereas shrubs are present.

Climate change conversion affects all classes at the same rate of 0.0075/year (135 years) by transitioning them to low-black sagebrush within the same class. In the *early-succession open* class the system ages by two years and enters the low-black sagebrush *early-succession* class *(LBS-A)* at age 2 to prevent an immediate second conversion to mixed salt desert. This type of climate change conversion in all classes is an exception to the rule that reflects the fact that low sagebrush is the indicator species in low sagebrush steppe and low-black sagebrush and that only the precipitation zone (the site potential) changes.

Literature cited in LANDFIRE's Model Tracker:

Biondi, F., Kozubowski. T.J., Panorska, A.K., and L. Saito. 2007. A new stochastic model of episode peak and duration for eco-hydro-climatic applications. Ecological Modelling 211:383-395.

Chambers, J. C. and Miller, J. editors. 2004. Great Basin riparian areas: ecology, management, and restoration. Society for Ecological Restoration International, Island Press. Pp 24-48.

Blackburn, W. H. and P. T. Tueller. 1970. Pinyon and juniper invasion in black sagebrush communities in east-central Nevada. Ecology 51(5):841-848.

Miller, R. F. and J. A. Rose. 1999. Fire history and western juniper encroachment in sagebrush steppe. Journal of Range Management 52:550-559.

USDA-NRCS 2003. Ecological site descriptions for Nevada. Technical Guide Section IIE. MLRAs 28B, 28A, 29, 25, 24, 23.

Young, J. A., and R. A. Evans. 1978. Population Dynamics after Wildfires in Sagebrush Grasslands. Journal of Range Management 31:283-289.

Young, J. A., and R. A. Evans. 1981. Demography and Fire History of a Western Juniper Stand. Journal of Range Management 34:501-505.

Young, J. A. and D. E. Palmquist. 1992. Plant age/size distributions in black sagebrush (Artemisia nova): effects on community structure. Great Basin Naturalist 52(4):313-320.

Ratzlaff, T. D. and J. E. Anderson. 1995. Vegetal recovery following wildfire in seeded and unseeded sagebrush steppe. Journal of Range Management 48:386-391.

Zamora, B. and P. T. Tueller. 1973. Artemisia arbuscula, A. longiloba, and A. nova habitat types in northern Nevada. Great Basin Naturalist 33: 225-242.

State-and-Transition Model:

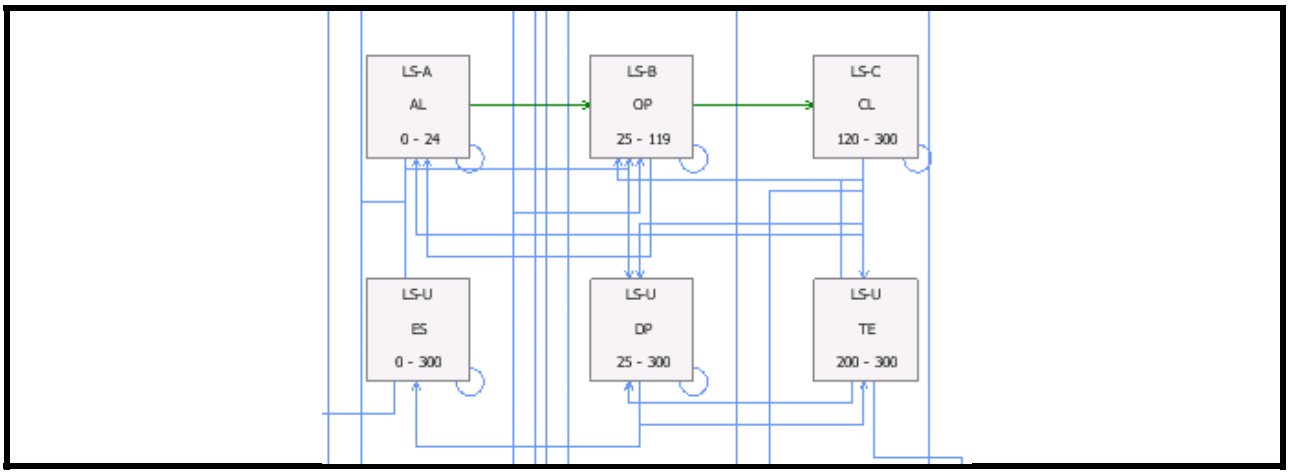
LS-A
AL
0 - 24
LS-B
OP
25 - 119
LS-C
CL
120 - 300
LS-U
ES
0 - 300
LS-U
DP
25 - 300
LS-U
TE
200 - 300

Mixed Conifer (MC) 1052

Area of Application and Context:

- **Nevada Wildlife Action Plan**
- **No livestock grazing**
- **Full fire suppression management**
- **Date created: 2011**

Vegetation classes:

- *A-**Early***: 0-15% cover of tree/shrub/grass; <5m; 0-29 yrs
- *B-**Mid-closed***: 35-100% cover of conifers <24m; 30-99 yrs
- *C-**Mid-open***: 0-35% cover of white fir and other conifers <24m; 30-99 yrs
- *D-**Late-open***: 0-35% cover of white fir and other conifers 25-49m; >100 yrs
- *E-**Late-closed***: 35-100% cover of white fir and other conifers 25-49m; >100 yrs
- *U-TA**: Tree-Annual-Grass***: 10-80% cover of young and older white fir and other conifers; >5% cheatgrass cover; native grass and shrubs present to abundant
  *U-AG**: Annual Grass***: >10% cheatgrass cover; <10% shrub cover; trees largely absent; charred logs or standing dead trees often present; native grasses and forbs present to abundant

Reference Condition:

- **Natural Range of Variability**

  *A-**Early**:* 23%
  *B-**Mid-closed**:* 21%
  *C-**Mid-open**:* 14%
  *D-**Late-open**:* 28%
  *E-**Late-closed**:* 14%
  U: 0%

Succession:

Succession is the standard five-box model with a dominant closed canopy succession and a probabilistic alternate succession conditional on the time since the last fire (in VDDT jargon, Time-Since-Disturbance or TSD):

- Closed canopy pathway
  - *Early-succession* to *mid-succession closed*: 29 years
  - *Mid-succession closed* to *late-succession closed*: 99 years
- Open canopy pathway
  - *Mid-succession open* to *late-succession closed*: 99 years
- Alternate succession
  - *Mid-succession open* to *mid-succession closed*: 31-99 years conditional upon lack of any fire for 35 consecutive years
  - *Late-succession open* to *late-succession closed*: ≥100 years conditional upon lack of any

fire for 35 consecutive years.

Natural Disturbances:

Fire is the dominant process in the mixed conifer biophysical setting. *Replacement fire* is present in all classes and causes a transition to the beginning of the *early-succession* class *(MC-A)* for reference classes. A mean fire return interval of 125 years (0.008/year) applies to the *early-succession* (*MC-A*), *mid-succession closed* (*MC-B*), and *late-succession closed* (*MC-E*) classes. The mean fire return interval lengthens to 400 years (0.0025/year) in the *mid-succession open* (*MC-C*) and *late-succession open* (*MC-D*) classes that supports less heavy fuels than the closed classes. The *trees with annual grasses* class *(TA)* experiences replacement fire every 190 years on average (rate of 0.0053/year) causing a transition to the *annual grass* class *(AG)*. This latter class burns every 10 years (rate of 0.1/year) with age reset at zero.

Mixed severity fire occurs in the *mid* and *late-succession closed* classes (*MC-B* and *E)* reference classes where they transition at a rate of 0.02/year (50 years) to the *mid-succession open* and *late-succession open* classes respectively. *Mixed severity fire* also occurs in the *trees with annual grasses* class *(TA)* with 80% of the pixels converting to the *annual grass* class *(AG)* at a rate of 0.015/year (65 years return interval) and the remaining pixels with trees unaffected.

Surface fire has a return interval equal to that of mixed severity fire (0.02/year), but only occurrs in the *mid-succession* and *late-succession* classes and causes no transition.

A *drought* return interval rate of every 179 years (a rate of 0.0056/year) is used based on the frequency of severe drought intervals estimated by Biondi *et al*. (2007) from 2,300 years of western juniper (*Juniperus occidentalis)* tree ring data from the Walker River drainage of eastern California and western Nevada. Although we recognize that droughts may be more common than every 179 years, severe droughts, which are >7-year drought events with consecutive far-below average soil moisture (narrow tree rings), kill naturally drought resistant species. *Drought* affects the *early-succession* class (*MC-A*) and both late-succession reference classes because older trees are more vulnerable to stress. The mid-succession classes are considered more resistant than other classes to *drought* because trees are in full vigor. *Drought* thins the early-succession class (*MC-A*) under the assumption that conifer seedlings would be killed. Intraspecific competition among trees is assumed less in the *late-succession open* class (*MC-D*) where *drought* thins the older trees to the beginning of the succession classes. Intraspecific competition is increased by greater tree cover (and presumably density) in the *late-succession closed* class (*MC-E*); therefore, *drought* thinning causes a transition to the *late-succession open* class (*MC-D*) while maintaining succession age.

Insect/disease outbreaks are more frequent than the return interval of severe *drought* and found in all classes except *early-succession* (*MC-A*). A 100-year return interval (0.01/year) of *insect/disease* applies to the *mid-succession closed* and *open* class (*MC-B* and *C*) and retains vegetation in the same classes without resetting their age to zero. The return interval of *insect/disease* outbreaks increases to 50 years (0.02/year) with 60% resulting in stand replacement and 40% thinning to the *late-succession open* class (*MC-D*). The *late-succession open* class (*MC-E*) is also affected by the *insect/disease* disturbance with thinning occurring within the class but without affecting the succession age at a rate of 0.001/year (1,000 years). *Insect/disease* outbreaks also thin by 10 years (reversal of succession) the *tree with annual grass* class *(TA)* to indicate that a fraction of the older trees are killed.

Annual grass invasion was weakly present in all *mid-succession* and *late-succession* classes at an

arbitrary rate of 0.0001/year (10,000 years) and caused a transition to the *tree with annual grass* class (*TA*).

Alternate succession applies to the *mid-succession and late-succession open* classes (*MC-C, D*). If no fire, occurs for more than 35 years then the classes will transition in 3 years to the *mid-succession* and *late-success closed* classes (*MC-B, E*), respectively, maintaining the age of the class. This disturbance corresponds to infilling of fire-sensitive conifers among the older trees.

Climate change conversion affects only the *early-succession open* class at a rate of 0.12/year (8 years), but in different ways depending on the phytoregion. The only consistency is that in each phytoregion 80% of the conversion occurs to pinyon-juniper *early-succession open* class.

- In the Columbia Plateau phytoregions :
  - The *early-succession open* class *(MC-A)* and the *annual grass* class *(AG)*, respectively, convert 80% to the pinyon-juniper *early- succession open* class *(PJ-A)* and to the pinyon-juniper *annual grass* class *(PJ-AG) ; and*
  - The *early-succession open* class *(MC-A)* and the *annual grass* class *(AG)*, respectively, convert 20% to the ponderosa pine *early- succession open* class *(PP-A)* and to the ponderosa pine *annual grass* class *(PJ-AG).*
- In the Eastern Sierra Nevada phytoregions:
  - The *early-succession open* class *(MC-A)* and the *annual grass* class *(AG)*, respectively, converts10% to the chaparral *early-succession open* class *(Chp-A)* and to the chaparral *annual grass* class *(Chp-AG);*
  - The *early-succession open* class *(MC-A)* and the *annual grass* class *(AG)*, respectively, convert 10% to the Jeffrey pine *early-succession open* class *(JP-A) and* to the Jeffrey pine *annual grass* class *(JP-A);* and
  - The *early-succession open* class *(MC-A)* and the *annual grass* class *(AG)*, respectively, convert 80% to the pinyon-juniper *early-succession open* class *(PJ-A)* and to the pinyon-juniper *annual grass* class *(PJ-AG).*
- In the Great Basin phytoregions:
  - The *early-succession open* class *(MC-A)* and the *annual grass* class *(AG)*, respectively, convert 10% to the chaparral *early-succession open* class *(Chp-A)* and to the chaparral *annual grass* class *(Chp-AG);*
  - The *early-succession open* class *(MC-A)* and the *annual grass* class *(AG)*, respectively, convert 80% to the pinyon-juniper *early-succession open* class *(PJ-A)* and to the pinyon-juniper *annual grass* class *(PJ-AG);* and
  - The *early-succession open* class *(MC-A)* converts 10% to the ponderosa pine *early-succession open* class *(PP-A*) and to the ponderosa pine *annual grass* class *(PJ-AG).*
- In the Mojave phytoregions:
  - The *early-succession open* class *(MC-A)* and the *annual grass* class *(AG)*, respectively, converts10% to the chaparral *early-succession open* class *(Chp-A)* and to the chaparral *annual grass* class *(Chp-AG);*
  - The *early-succession open* class *(MC-A)* and the *annual grass* class *(AG)*, respectively, convert 80% to the pinyon-juniper *early-succession open* class *(PJ-A)* and to the ponderosa pine *annual grass* class *(PJ-AG);*
  - The *early-succession open class (MC-A)* and the *annual grass* class *(AG)*, respectively, convert 10% to the ponderosa pine *early-succession open* class *(PP-A)* and to the ponderosa pine *annual grass* class *(PJ-AG).*

Literature cited in LANDFIRE's Model Tracker:

Barrett, S.W., 1988. Fire suppression effects on Forest Succession within a Central Idaho Wilderness. Western J of Applied Forestry, 3(3): 76-80.

Barrett, S.W., 1994. Fire regimes on the Caribou National Forest, Southern Idaho. Final Report - Contract No. 53-02S2-3-05071.

Barrett, S.W. 2004. Altered fire intervals and fire cycles in the northern Rockies. Fire Management Today 64(2):25-29.

Biondi, F., Kozubowski. T.J., Panorska, A.K., and L. Saito. 2007. A new stochastic model of episode peak and duration for eco-hydro-climatic applications. Ecological Modelling 211:383-395.

Bradley, A.F., W.C. Fische, and N.V. Noste. 1992. Fire ecology of the forest habitat types of Eastern Idaho and Western Wyoming. Intermountain Research Station, Ogden, UT 84401. GTR-INT-290.

Bradley, A.F., N.V. Noste, and W.C. Fischer. 1992. Fire ecology of the forests and woodland in Utah. Intermountain Research Station, Ogden, UT 84401. GTR-UNT-287.

Brown, J.K. S.F. Arno, S.W. Barrett, and J.P. Menakis. 1994. Comparing the prescribed natural fire program with pre-settlement fires in the Selway-Bitterroot Wilderness. Int. J. Wildland Fire 4(3):157-168.

Crane, M.F. 1986. Fire ecology of the forest habitat types of Central Idaho. Intermountain Research Station, Ogden, UT 84401. GTR-INT-218.

Morgan, P, S.C. Bunting, A.E. Black, T. Merrill and S. Barrett. 1996. Fire regimes in the Interior Columbia River Basin: Past and Present. Final report for RJVA-INT-94913: Coarse-scale classification and mapping of disturbance regimes in the Columbia River Basin. Submitted to Intermountain Fire Science Lab., Intermountain Research Station, Missoula, Montana, USDA Forest Service.

Steele, R., R.D. Pfister, R.A. Ryker, and J.A. Kittams. 1981. Forest habitat types of Central Idaho. USDA For. Serv. Tech Rep. INT-114, 138p. Intermt. For. and Range Exp. Stn., Ogden, UT 84401.

Swetnam, T.W., B.E. Wickman, H.G., Paul, and C.H. Baisan. 19950 Historical patterns of western spruce budworm and Douglas-fir tussock moth outbreaks in the northern Blue Mountains, Oregon, since A.D. 1700. USDA Forest Service. Pacific Northwest Research Station. Research paper PNW-RP-484, 27 pp.

State-and-Transition Model (cropped):

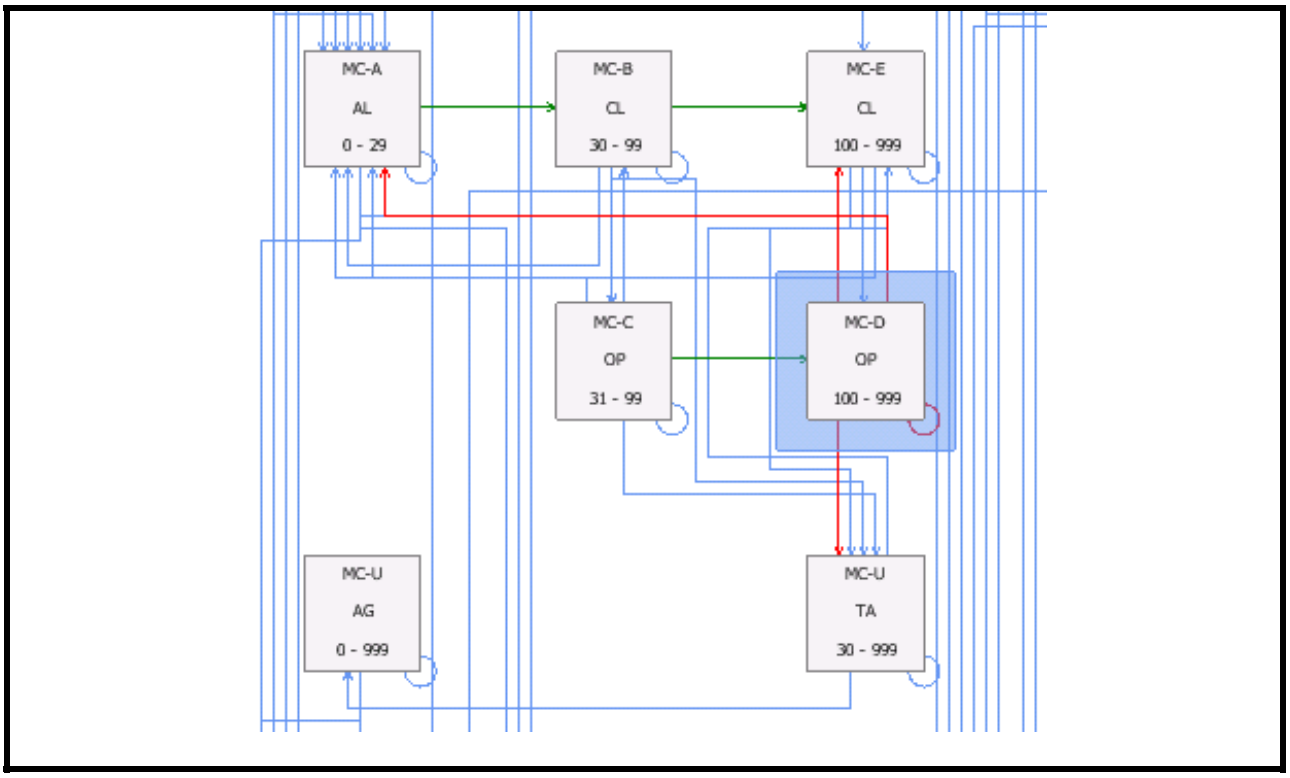
MC-A
AL
0 - 29
MC-B
CL
30 - 99
MC-E
CL
100 - 999
MC-C
OP
31 - 99
MC-D
OP
100 - 999
MC-U
AG
0 - 999
MC-U
TA
30 - 999

Mixed Salt Desert (MSD)

Area of Application and Context:

- **Wildlife Action Plan Revision**
- **Livestock grazing**
- **Fire suppression management**
- **Date created: 2011**

Vegetation:

- *A-**Early***: 0-5% cover of young *Atriplex* spp. or other shrubs; Indian ricegrass and squirreltail common; 0-5 yrs
- *B- **Late1-open***: 5-20% cover *Atriplex* spp. or other shrubs; >6 yrs
- *C- **Late2-open***: 5-20% cover budsage <0.25m; >7 years
- *U-AG*: ***Annual-Grass***: 5-30% cheatgrass cover; <10% shrub cover
- *U-SA*: ***Shrub-Annual-Grass***: 5-20% cover of *Atriplex* spp. or other shrubs; 5-20% cheatgrass cover
- *U-SD: **Seeded***: native or non-native (crested wheatgrass, Russian wheatgrass, forage kochia) seed mix cover 5-20%

Reference Condition:

- **Natural Range of Variability**

	Mojave	Elko, Calcareous, Lahontan, Walker, E. Sierra Nevada
*A-**Early***	7%	7%
*B-**Late1-Open***	83%	71%
*C-**Late2-Open***	10%	22%
U	0%	0%

Succession:

Two deterministic succession pathways occur in mixed salt desert. The primary succession follows the 2-box pathway with heterogeneous vegetation starting with less than 5% *Atriplex* species and native grass, and ending with up to 20% cover of *Atriplex* species. The second succession pathway occurs between the late-succession budsage phase and the Atriplex-dominated phase of the primary succession:

- *Early-succession* to *late1-succession open*: 5 years
- *Late2-succession open* to *late1-succession open*: 59 years

Natural Disturbances:

Mixed salt desert is not fire adapted. Among reference classes, *replacement fire* is only found in the *late1-succession open* class *(MSD-B),* which will convert to the *early-succession* class *(MSD-A)* after fire. The mean fire return interval in this class varies between 1,000 years (rate of 0.001/year) in the Columbia Plateau phytoregions to 10,000 years (0.0001/year) in the other phytoregions. These very low

rates simply admit the rare possibility of fire. In the uncharacteristic classes, all fires cause a transition to the *annual grass* class *(AG)*: the *annual grass* class *(AG)* and *shrubs mixed with annual grass* class *(SA)*, respectively, burn on average every 10 years (rates of 0.1/year) and 40 years (0.025/year) throughout all phytoregions.

The disturbance *very-wet-year* causes root rot and root-boring insect attacks, leading to stand-replacing effects that resets all reference classes to the beginning of age of the *early-succession* class *(MSD-A)* at the same rate of 0.018/year (56 years) except in the Mojave phytoregion, where the *early-succession open* class *(MSD-A)* converts at a rate of 0.01/year (100 years) and the *late-succession open* class *(MSD-C)* converts at a rate of 0.05/year (20 years). These differences are caused by the analysis of different Palmer Drought Severity Index time series. Uncharacteristic classes convert at rates that varied with phytoregions:

- In the Columbia Plateau phytoregions, the *shrubs with mixed annual and perennial grass* class *(SAP)* converts to the *annual grass* class (AG) at a rate of 0.018/year (56 years), in all other phytoregions *shrubs with mixed annual and perennial grass* class transitions at a rate of 0.05/year (20 years);
- In all phytoregions, *very-wet-year* is a self-loop in the *seeded* class *(SD)* that resets its age to zero.

A *drought* return interval rate of every 179 years (a rate of 0.0056/year) is used based on the frequency of severe drought intervals estimated by Biondi *et al*. (2007) from 2,300 years of western juniper (*Juniperus occidentalis)* tree ring data from the Walker River drainage of eastern California and western Nevada. Although we recognize that droughts may be more common than every 179 years, severe droughts, which are >7-year drought events with consecutive far-below average soil moisture (narrow tree rings), kill naturally drought resistant species. *Drought* affects the uncharacteristic classes *mid-succession and late-succession open* (MSD-B and C) classes at a rate of 0.0056/year (179 years) by converting both classes to *late-succession open* class *(MSD-C)*. The uncharacteristic *seeded* class (*SD*) is affected at the same rate, but is retained within the same class.

Managed herbivory applies to the *early-succession (MSD-A), late1-succession open (MSD-B), and seeded (SD)* classes at a rate representing 5% of the grazable area in a phytoregion (this implementation rate represents an average stocking rate that overrides the 5%/year rate in the models). In all cases, *managed herbivory* is a self-loop that simply moves forward woody succession by one year when a pixel is selected to indicate that livestock preferentially selects herbaceous vegetation over woody vegetation.

Annual grass invasion affects the reference classes and the uncharacteristic *seeded* class *(SD)* at the same rate of 0.005/year (200 years), but with differing results:

- *The early-succession open* class (*MSD-A*) converts to the *annual grass* class (*AG*)
- The *mid-succession open* class (*MSD-B*) and *late-succession open* class (*MSD-C*) converts to the *shrubs with mixed annual and perennial grass* class (*SAP*);
- The *seeded* class (*SD*) converts to *annual grass* (*AG*) from ages 0-4 years, but to the *shrubs with mixed annual and perennial grass* (*SAP*) after 5 years.

Natural recovery affects the *seeded* class (*SD*) only, where the uncharacteristic class transitions to the *early-succession open* class *(MSD-A)* at a rate of 0.001/year (1,000 years) from ages 0-4 and to the *mid-succession open* class (*MSD-B)* at a rate of 0.005/year (200 years) from ages 5-300. It is assumed that

the *seeded* class *(SD)* will increasingly look like reference classes with time since seeding.

Climate change-conversion affects the *early-succession open (MSD-A)* class and the uncharacteristic *annual grass* class *(AG)* by transitioning them to the creosote-bursage system only in the Great Basin ecoregion (central and southern Nevada phytoregions) while retaining them in the same class at a rate of 0.21/year (5 years). There is no c*limate change-conversion* for the phytoregions in the Mojave Desert, Columbia Plateau, or Sierra Nevada ecoregion.

Literature cited in LANDFIRE's Model Tracker:

Blaisdell, J. P., and R. C. Holmgren. 1984. Managing intermountain rangelands-salt-desert shrub ranges. General Technical Report INT-163. USDA Forest Service, Intermountain Forest and Range Experiment Station, Ogden, UT. 52 pp.

NRCS. 2003. Major Land Resource Area 28A Great Salt Lake Area. Nevada Ecological Site Descriptions. Reno, NV.

NRCS. 2003. Major Land Resource Area 28B Central Nevada Basin and Range. Nevada Ecological Site Descriptions. Reno, NV.

NRCS. 2003. Major Land Resource Area 29 Southern Nevada Basin and Range. Nevada Ecological Site Descriptions. Reno, NV.

Tiedemann, A. R., E. D. McArthur, H. C. Stutz. R. Stevens, and K. L. Johnson, compilers. 1984. Proceedings--symposium on the biology of Atriplex and related chenopods; 1983 May 2-6; Provo, UT. Gen. Tech. Rep. INT-172. Ogden, UT. U.S. Department of Agriculture, Forest Service, Intermountain Forest and Range Experiment. 309 pp.

State-and-Transition Model (cropped):

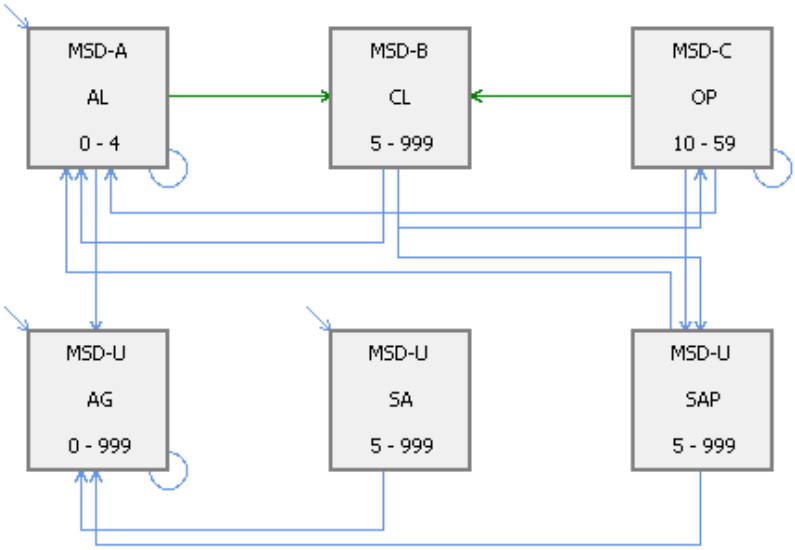

Montane Riparian (MR) 1154 (carbonate or non-carbonate)

Area of Application and Context:

- **Wildlife Action Plan Revision**
- **Livestock grazing**
- **Fire suppression management**
- **Date created: 2011**

Vegetation:

- *A-**Early***: 0-50% cover of cottonwood, willow, Wood's rose <3m; carex present; 0-5 yrs
- *B-**Mid-open***: 31-100% cover of cottonwood, aspen, willow, young conifers, Wood's rose <10m; 5-20 yrs
- *C-**Late-closed***: 31-100% cover of cottonwood, alder, aspen, conifer, willow 10-24m; >20 yrs
- *U-SFE*: ***Shrub-Forb-Encroached***: 10-50% cover of unpalatable shrub and forb species (*Rosa woodsii* and *Rhus trilobata)* in open areas or under tree canopy
- *U-EF*: ***Exotic-Forbs***: 10-100% cover of exotic forbs (knapweed, tall whitetop, purple loosestrife, thistle), salt cedar, or Russian olive
- *U-DE*: ***Desertification***: Entrenched river/creek with 10-50% cover of upland shrubs (e.g., big sage); cheatgrass absent to common
- U-*PA:* ***Pasture***: agricultural pasture

Reference Condition:

- **Natural Range of Variability**

	E. Sierra Nevada	Elko, Calcareous, Lahontan, Walker
*A-**Early***	13%	33%
*B-**Mid-closed***	31%	39%
*C-**Late-closed***	56%	28%
U	0%	0%

Succession:

Succession follows the 3-box pathway with heterogeneous vegetation starting with willow and Fremont or narrow-leaf cottonwood, and wet meadows and ending with a forested mix of willow, cottonwood, montane and subalpine conifer, aspen, and wet meadow. The succession pathway is entirely deterministic with transitions occurring at the following ages:

- *Early-succession* to *mid-succession closed*: 4 years
- *Mid-succession closed* to *late-succession closed*: 19 years

Natural Disturbances:

The montane riparian biophysical setting is deceptively simple but contains some of the most complex dynamics of all biophysical settings due to the interaction of hydrological and floodplain vegetation processes.

Flooding dominates the dynamics of this biophysical setting. Three levels of *flooding* are 7-year events (0.13+/year) that kill or remove only herbaceous vegetation in the *early-succession* class (*MR-A*), 20-year events (0.05/year) that kill or remove shrubs and young trees in the *mid-succession closed* class (*MR-B*), and 100-year events (0.01/year) that top-kill larger trees and everything else in the *late-succession closed* class (*MR-C*).

The beaver population is assumed low in Nevada; therefore, the rates of *beaver-herbivory* are low in this model. *Beaver-herbivory* functions as a rotating disturbance where beavers fell woody vegetation, leave the creek's reach, and only return after substantial regrowth of aspen and willow has occurred, usually after 20-25 years. The effect of *beaver herbivory* is assumed to decrease from early-succession to later-succession vegetation classes. A rate of 0.05 (20-year return interval) is used in the *early-succession* class (*MR-A*) with a reversal of woody succession by one year for chosen pixels. This rate is decreased to 0.04 (25 years) in the *mid-succession closed* class (*MR-B*); however, 50% of the herbivory is a stand-replacing event, whereas the rest of the disturbance thins within the *mid-succession closed* class (*MR-B*) to the beginning of the class. The rate of *beaver herbivory* drops in the late-succession class (*MR-C*) to 0.001/year partitioned equally between thinning within this class by reversal of woody succession by 5 years for chosen pixels and thinning to the *mid-succession closed* class (*MR-B*).

Replacement fire originates from the surrounding landscape and restarts the succession clock to age zero in the *early-succession* class (*MR-A*) after sweeping through the riparian corridor. A common 50-year fire return interval (0.02/year) applies to the *mid-succession open* (*MR-B*) and *late-succession closed* (*MR-C*). Replacement fire acts as a self-loop in the *exotic forb* class (*EF), shrub-forb-encroached* class *(SFE)*, and *desertified* class *(DE)*.

Another important disturbance is *exotic invasion* represented mainly by tall whitetop, knapweeds (*Centaurea* spp.), and thistles. Exotic trees such as saltcedar and Russian olive are included in this class. *Exotic invasion* causes a transition to the *exotic forb* class (*EF)* at a rate of 0.01/year. Roadways, off-highway vehicles, and animals are usually the greatest vectors of exotic forbs. *Exotic invasion* occurs in three classes: *mid-succession open* (*MR-B*), *late-succession closed* (*MR-C*), and *shrub-forb-encroached (SFE)*.

Managed herbivory applies to the reference and *shrub-forb-encroached (SFE)* classes at a rate representing 5% of the grazable area in a phytoregion (this implementation rate represents an average stocking rate that overrides the 5%/year rate in the models). *Managed herbivory* is a self-loop that simply moves backward or forward woody succession depending on plant susceptibility to grazing. In the *early-succession* class *(MR-A)*, vegetation is considered very palatable and, as a result, livestock grazing and trampling in the riparian floodplain reverses woody succession back to the beginning age with removal of willow and cottonwood. As vegetation ages and starts exceeding the height of animals in the *mid-succession closed* class *(MR-B)*, livestock grazing and trampling cause a minor reversal of

woody succession by one year for selected pixels. Under the more developed canopy of the *late-succession closed* class *(MR-C)*, livestock grazing moves woody succession forward by one year for selected pixels by favoring woody understory and midstory species through the selective consumption of herbaceous species. Livestock grazing in the *shrub-forb-encroached (SFE)* class cause a transition to the *desertified* class (DE) because of bank slumping in a class of vegetation already the result of intensive grazing.

Excessive herbivory is the cause of a class reflecting historic grazing that establishes the dominance of riparian corridors by native forbs and shrub species unpalatable to domestic sheep and cattle (*shrub and forb encroached* or *U-SFE*) at rates of 0.001/year (1,000 years). The rate of 0.001/year, however, is replaced by an implementation rate equal to 0.1% of the grazable are in the phytoregion shared among all vegetation classes (i.e., all grazable classes compete for livestock). The rate of *excessive herbivory* is low because its effects are localized to water sources and pathways close to water sources; therefore, a very small proportion of the landscape is affected. Only reference classes experience this disturbance.

Wild ungulate grazing is only associated with the carbonate version of riparian systems because of the presence of elk in mostly eastern Nevada (we realize that elk has been introduced to central Nevada on the volcanic geology of the Monitor Range). *Wild ungulate grazing* causes a transition in all reference classes of 0.01/year (100 years) where 80% of the class remains in the class as a self-loop and the other 20% converts to the *shrub-forb-encroached* class *(SFE)*. The rate of 0.01/year represents heavier use of 1 out of 100 pixels per year. Elk favor grass, thus favoring unpalatable vegetation, and can wallow in riparian corridors.

Entrenchment is only present in the *shrub-forb-encroached* class *(SFE)* if livestock have not been excluded from riparian systems for three consecutive years. *Entrenchment* causes a drop of the water table and formation of a *desertified (DE)* floodplain. The rate of *entrenchment* is higher at 0.05/year (caused by 20-year flood events in an unstable channel used by livestock) early after the creation of *shrub-forb-encroached* class *(SFE)* from ages 0 to 4, whereas the rate drops to 0.01/year (corresponding to a more energetic 100-year flood event) with aging of the vegetation after 5 years.

In the Columbia Plateau and Eastern Sierra Nevada phytoregions, the *early-succession (MR-A)* class converts evenly between big sagebrush steppe *early-succession open* class *(BSS-A)* and big sagebrush upland *early-succession open* class *(BSu-A).* In the Great Basin phytoregions, the *early-succession* class (*MR-A*) converts to washes *early-succession open* class *(WAS-A)*, and in the Mojave phytoregion, it converts to the big sagebrush upland *early-succession open* class *(BSu-A).* There is no conversion in the carbonate systems because we assume that the source of surface water is from a stable aquifer with older water.

Literature cited in LANDFIRE's Model Tracker:

Barbour, M. G., and W. D. Billings, editors. 1988. North American terrestrial vegetation. Cambridge University Press, New York. 434 pp.

Barbour, M. G., and J. Major, editors. 1977. Terrestrial vegetation of California. John Wiley and Sons, New York. 1002 pp.

Hall, E. R. 1946. Mammals of Nevada. University of Nevada Press. Reno, NV.

Johnson, C. G., and S. A. Simon. 1985. Plant associations of the Wallowa Valley Ranger District, Part II: Steppe. USDA Forest Service, Pacific Northwest Region, Wallowa-Whitman National Forest. 258 pp.

Manning, M. E., and W. G. Padgett. 1995. Riparian community type classification for Humboldt and Toiyabe national forests, Nevada and eastern California. USDA Forest Service, Intermountain Region.

306 pp.
Nachlinger, J. and G. A. Reese. 1996. Plant community classification of the Spring Mountains National Recreation Area, Clark and Nye Counties, Nevada. Report submitted to USDA Forest Service, Humboldt-Toiyabe National Forest.
Sawyer, J. O., and T. Keeler-Wolf. 1995. A manual of California vegetation. California Native Plant Society, Sacramento. 471 pp.

State-and-Transition Model (cropped):

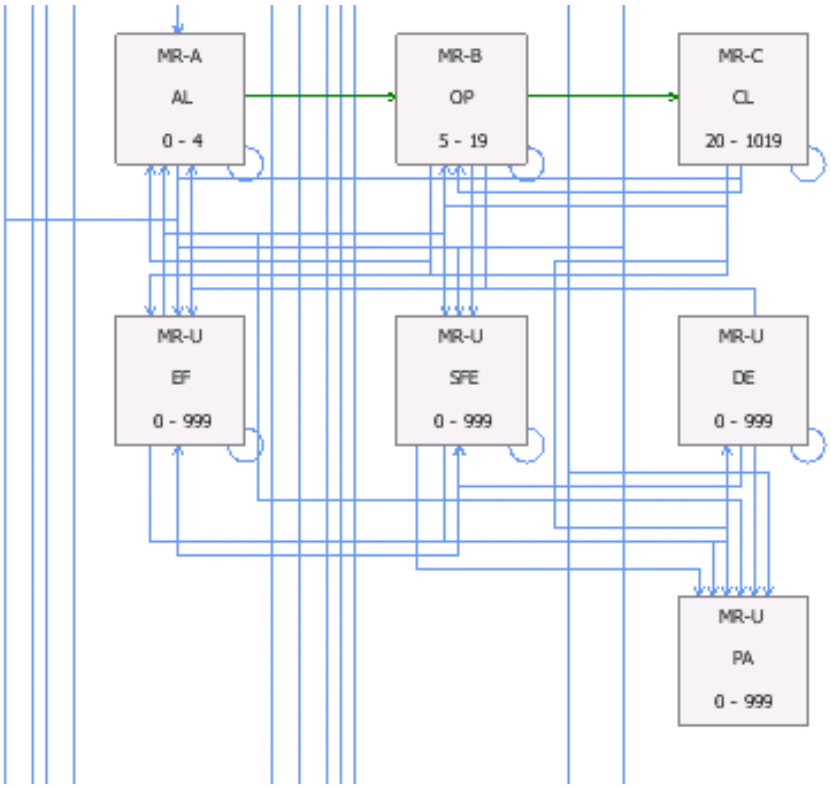

Montane Sagebrush Steppe-mountain (MSm) 1126m

Area of Application and Context:

- **Wildlife Action Plan Revision**
- **Livestock grazing**
- **Full fire suppression management**
- **Date created: 2011**

Vegetation classes:

The mountain site of the big sagebrush biophysical setting represents subalpine elevations of mountain big sagebrush with a greater importance of montane and subalpine mixed conifers replacing pinyon and juniper and the near absence of cheatgrass, except as spotty and temporary occurrences after fires. Mountain sites are also very resilient to disturbances.

- *A-**Early***: 0-10% canopy of mountain sagebrush/mountain brush; >50% grass/forb cover; 0-12 yrs
- *B-**Mid-open***: 11-30% cover of mountain sagebrush/mountain shrub; >50% herbaceous cover; 13-37 yrs
- *C-**Mid-closed***: 31-50% cover of mountain sagebrush/mountain brush; 25-50% herbaceous cover; <10% conifer sapling cover; >38 yrs
- *D-**Late-open***: 10-30% cover conifer <10m; 25-40% cover of mountain sagebrush/mountain brush; <30% herbaceous cover; 80-129 yrs
- *E-**Late-closed***: 31-80% conifer cover 10-25m; 6-20% shrub cover; <20% herbaceous cover; >129 yrs
- *U-ES: **Early-Shrub***: 10-50% cover rabbitbrush species
- *U-TE*: ***Tree-Encroached**:* 31-80% conifer cover 10-25m; <5% shrub cover; <5% herbaceous cover; >130 yrs
- *U-DP: **Depleted***: 20-50% cover of mountain big sagebrush/mountain brush; <10% herbaceous cover; <5% cheatgrass cover; <10% conifer sapling cover; >50 yrs
- *U-SAP*: ***Shrub-Annual-Grass-Perennial-Grass***: 21-50% cover of mountain big sagebrush/mountain brush; ≥10% cover of native grass; 5-10% cheatgrass cover; <10% conifer sapling cover; >50 yrs
- *U-AG: **Annual-Grass***: 10-30% cover of cheatgrass; <10% shrub cover

Reference Condition:

- **Natural Range of Variability**

	Lahontan, Elko, E. Sierra Nevad, Walke, Calcareous	*Mojave*
A-Early	21%	21%
B-Mid-open	44%	43%
C-Mid-closed	22%	28%
D-Late-open	10%	3%
E-Late-closed	4%	5%
U	0%	0%

Succession:

Succession follows the 5-box pathway with vegetation starting as predominantly herbaceous and ending with conifer dominance and a viable shrub and herbaceous understory. The succession pathway is not entirely deterministic as we used the *tree-invasion* probabilistic disturbance to cause a transition from the mid-succession open (*MSm-B*) and *mid-succession* closed (*MSm-C*) classes to the late-succession open (*MSm-D*) class. This rate of transition is 0.01/year. Pixels start transitionning at age 40 in the mid-succession open class (*MSm-B*). This rate is consistent with the transition from Phase 1 to Phase 2 by Miller and Tausch (2001): this rate approximately replicates encroachment levels proceeding in three phases of about 50 years each. Deterministic succession transitions occur at the following ages:

- *Early-succession* to *mid-succession open*: 12 years
- *Mid-succession open* to *mid-succession closed*: >38 years
- *Mid-succession closed* to *late-succession open*: 129 years (probabilistic)
- *Late-succession open* to *late-succession closed*: ≥129 years (deterministic)

Natural Disturbances:

Replacement fire is the primary stochastic disturbance. *Replacement fire* restarts the succession clock to age zero within the reference condition, which is labeled the *early-succession* class or *MSm-A*. The mean return interval of *replacement fire* changes with vegetation classes: from 80 years (0.0125/year) in the *early-succession* class (*MSm-A*), 40 years (0.025/year) in the *mid-succession open* class (*MSm-C*), 50 years (0.02/year) in the *mid-succession closed* and *late-succession open* classes (*MSm-C* and *MSm-D*), to 77 years (0.013/year) in the wooded *late-succession closed* class (*MSm-E*).

Replacement fire in vegetation classes that already experienced a threshold transition will also cause a threshold transition to other uncharacteristic classes. Fire in the *tree-encroached* class (*TE*) with a mean fire return interval of 119 years (0.0084/year) causes a transition to the *early shrub* class (*ES*). The *depleted* class (*DP*) burns with a 50-year return interval (0.02/year) and converts to the *early shrub* class (*ES*). Fire in this latter class (50-year fire return interval) simply promotes rabbitbrush as a self-loop for 95% of outcomes, whereas for a small 5% of outcomes the vegetation reverts to the *early-succession* class (*MSm-A*). A 50-year fire cycle applies to the ephemeral *annual grass* class (*AG*) and behaves as a self-loop. A longer 50-year return interval compared to a 10-year return interval more typical of annual grassland (Young et al. 1987; Young and Sparks 2002) is chosen because it is assumed that cheatgrass patches are small and, therefore, fire is imported from the larger sagebrush communities. The patchy *shrub with mixed annual and perennial grasses* class (*SAP*) will become the *annual grass* class (*AG*) 20% of times and *early-succession* class (*MSm-A*) for the other 80% of occurrences after experiencing *replacement fire* occurring every 25 years (rate of 0.04/year) mean of average. Fire in this originating class is imported from the surrounding sagebrush community.

Drought affects older shrub classes and classes with trees. It is assumed that water is not limiting in this subalpine sagebrush community at >14 inches of precipitation; however, montane and subalpine trees will suffer from *drought* because they will be found in the warmer spectrum of their ecological niche. In most cases, *drought* creates tree and older shrub mortality under the assumption that prolonged and decreased soil moisture weakens plants that might ultimately be killed by insects or disease. Therefore, we do not double-count mortality. A *drought* return interval rate of every 179 years (a rate of 0.0056/year) is used based on the frequency of severe drought intervals estimated by Biondi *et al*. (2007) from 2,300 years of western juniper (*Juniperus occidentalis)* tree ring data from the Walker River drainage of eastern California and western Nevada. Although we recognize that droughts may be more

common than every 179 years, severe droughts, which are >7-year drought events with consecutive far-below average soil moisture (narrow tree rings), kill naturally drought resistant shrubs and trees. For vegetation classes in the reference condition, drought affects the *mid-succession closed (MSm-C), late-succession open* (*MSm-D*), and *late-succession* closed (*MSm-E*) classes (i.e., not the first three classes of succession) in different ways.

Drought partitions the classes in the following ways:

- Ten percent of the mid-*succession closed* class (*MSm-C)* is thinned to the previous class, whereas 90% remains in the current class.
- The *late-succession open* class (*MSm-D*) is affected in three ways because young conifers or old shrubs are thinned:

    - 10% thinning within the originating class (i.e., no change of class but the age returns to the beginning of the class);
    - 60% thinning to the previous class (*mid-succession closed* or *MSm-C*);
    - 30% thinning to the *mid-succession open* class (*MSm-B*), where young trees are dense enough to have started suppressing shrub cover.

- The *late-succession closed* class (*MSm-E*), which is wooded, behaves differently than others to drought because trees have already somewhat suppressed the understory:

    - 10% of the effect of thinning by drought kills trees, but releases the low cover of shrubs and grass more typical of the *mid-succession open* class (*MSm-B*);
    - For the remaining 90%, *drought* increases resource competition to the detriment of shrubs and the herbaceous understory, therefore accelerating woody succession by 5 years when a pixel is chosen.

- *Drought* affects two uncharacteristic classes.

    - The *depleted* class (*DP*) transitions to the early-shrub class (*ES*) 10% of times, whereas slight thinning of shrubs within the *depleted* shrubland class (*DP*) represents the fate of the remaining 90%.

- Drought thins the *tree-encroached shrubland* class (*TE*) to the *early-shrub* class (*ES*).

Tree-invasion (i.e., white fir, Douglas-fir, pinyon, juniper, and limber pine) is a time-dependent process because tree seedlings required mature shrubs (we use between 40-100 years of succession but 100 years for uncharacteristic classes), such as sagebrush and bitterbrush, for nurse plants. We have discussed *tree-invasion* above for reference classes. Uncharacteristic classes also experience tree establishment. The *depleted* class (*DP*) and the *shrubs with mixed annual and perennial grass* class (*SAP)* convert to the *tree-encroached* class *(TE)* after 100 years at the rate of 0.01/year, which is the rate used in the primary succession.

Tree-encroachment of shrublands represents the elimination of shrubs and herbaceous cover by long-

established trees. *Tree encroachment* affects the late-*succession closed* class *(MSm-E),* which is converted completely to the *tree-encroached* class *(TE)* at arbitrary rates that increase with the age of the trees in the class:

- 0.005/year from ages 150 to 209 years (250 years in the Mojave phytoregions);
- 0.01/year from ages 210 to 259 years (250 to 300 years in the Mojave phytoregions);
- 0.02/year after 260 years (after 250 years in the Mojave phytoregions).

Annual grass invasion (*AG-invasion*) occurs in all the reference classes and the *depleted* class *(DP)*. *Annual grass invasion* occurs at a rate of 0.0001/year (1 out of 10,000 pixels per year) in the *early-succession open* class *(MSm-A),* where it converts to the *annual grass* class *(*AG). This low rate simply indicates that invasion is nearly impossible or absent in the biophysical setting. The same low rate is used for invasion in the *late-succession closed* class *(MSm-E),* which converts to the *tree encroached class (TE*), a general class that can include annual grass cover. The presence of shade from trees is the main cause for low *annual grass* invasion rates. The *mid-succession* classes *(MSm-B* and *C;* not in the Mojave phytoregion*)* and the *late-succession open* class (*MSm-D)* and the *depleted* class *(DP;* not in Mojave phytoregion*)* all convert to *shrubs with mixed annual and perennial grass (SAP)* at a rate of 0.001/year (1,000 years). In the Mojave phytoregions, all reference classes convert to the *shrubs with mixed annual and perennial grass* class *(SAP)* at a rate of 0.0025/year. In the Eastern Sierra Nevada and Great Basin phytoregions, the *mid-succession closed* and *late-succession* open classes *(MSm-C* and D*)* transition to the *shrubs with mixed annual and perennial grass* class *(SAP)* at a rate of 0.005/year (200 years).

Natural recovery is an age-dependent transition that allows the *early-shrub* class (*ES*) and the *shrub with mixed annual and perennial grasses* class (*SAP*) to return to reference classes at a very slow rate of 0.001/year. The *early-succession shrub* class (*ES*), which is assumed very stable or resistant to change, starts conversion at a rate to 0.001/year to the *mid-succession open* class (*MSm-B*) between ages 12 and 49 and to the *mid-succession closed* class (*MSm-C*) for ages ≥50. The *shrub with mixed annual and perennial grasses* class (*SAP*) makes this same conversion, but only within the Eastern Sierra Nevada and Great Basin phytoregions.

Managed herbivory applies to all reference classes at a rate representing 5% of the grazable area in a phytoregion (this implementation rate represents an average stocking rate that overrides the 5%/year rate in the models). *Managed herbivory* affects the reference classes from the *early-succession to late-succession open* classes (*MSm-A* to *D)* and the uncharacteristic *shrubs with mixed annual and perennial grass* class *(SAP)*. The effect of *managed herbivory* is to move woody succession by one year for selected pixels within the same class (self-loop) to indicate that livestock preferentially selects herbaceous vegetation over woody vegetation.

Excessive herbivory affects the same classes as in *managed herbivory* at a low rate of 0.001/year (1/1000 pixels excessively grazed per year) with varying effects:

- The *early-succession open* class *(MSm-A)* converts to the *early shrub* class *(ES);*
- Seventy-five percent of the *mid-succession open* class *(MSm-B)* stays in that class while woody succession is moved forward by one year, whereas 25% converts to the *early shrub* class *(ES*);
- The *mid-succession closed* class *(MSm-C)* converts to the *depleted* class *(DP);*
- Seventy-five percent of the l*ate-succession open* class *(MSm-D)* stays in that class while woody succession is moved forward by one extra year, whereas 25% converts to the d*epleted* class *(DP)*;
- The *shrubs with mixed annual and perennial grass* class (SAP) stays in the same class, but

woody succession moves forward by 5 years for selected pixels.

Climate change conversion affects all classes, but with differences among phytoregions. The conversions between montane sagebrush steppe-mountain and big sagebrush upland are direct as ages match exactly—only the percentage of conversion varies among phytoregions; therefore we do not describe these conversions, unless some exceptions require descriptions.

- In the Columbia Plateau, *climate change conversion* affects the classes at a rate of 0.0084/year (119 years). Classes convert 50% to big sagebrush steppe (BSS) and 50% to big sagebrush-upland at a rate of 0.0084/year. Big sagebrush steppe is most prevalent in the phytoregions of the Columbia Plateau where indicator species such as Idaho fescue are common. The *late-succession closed* class *(MSm-E)* is one exception because it converts entirely to the *late-succession closed* class of big sagebrush upland *(BSu-E)*; indeed, there is no equivalent class in big sagebrush steppe. Because the age range of originating and recipient classes do not always match for big sagebrush steppe, conversions can be involved:

    - *The early-succession open* class *(MSm-A)* and *mid-succession open* class *(MSm-B)* from ages 12 and 19 years convert to the big sagebrush steppe *early-succession open* class *(BSS-A)*;
    - The *mid-succession open* class *(MSm-B)* from ages 20 to 49 years, *mid-succession closed* class *(MSm-C)* from ages 50 to 59 years, and *late-succession open* class *(MSm-D)* from ages 40 to 59 years convert to the big sagebrush steppe *mid-succession open* class *(BSS-B)*;
    - The *mid-succession closed* class *(MSm-C)* after age 59 years and *late-succession open* class *(MSm-D)* from ages 60 to 114 years convert to the big sagebrush steppe *mid-succession closed* class *(BSS-C)*;
    - Fifty percent of the *late-succession open* class *(MSm-D)* converts to big sagebrush upland *late-succession open* class (*BSu-D)*.
    - The *shrubs with mixed annual and perennial grass* class *(SAP), annual grass* class *(AG)*, and *early-shrub* class *(ES)* convert equally to the same class in the big sagebrush steppe and big sagebrush upland biophysical settings.
    - The *depleted* class *(DP)* converts equally to the big sagebrush steppe *shrubs with mixed annual and perennial grass (BSS-SAP)* at a rate of 0.009/year (111 years);
    - The *tree-encroached* class *(TE)* converts equally to the big sagebrush steppe *tree with annual grass* class *(*TA) and to the big sagebrush upland *tree-encroached* class *(TE).*

- For the Eastern Sierra Nevada phytoregions and Great Basin phytoregions, *climate change conversion* follow the same pathways as in the Columbia Plateau phytoregions, but with the following differences: (1) the rate of conversion is 0.0089/year, (2) the percentage of conversion is 90% to big sagebrush upland *versus* 10% to big sagebrush steppe, and (3) the conversion for the *late-succession open* and *closed* classes *(MSm-D and E)* are entirely (100%) to the same classes in the big sagebrush upland biophysical setting.

- In the Mojave phytoregions, the *climate change conversion* only affects the first two

years of the *early-succession open* class *(MSm-A), annual grass* class *(AG),* and *early-shrub* class *(ES)* by equally splitting the transition between chaparral, mountain mahogany and ponderosa pine *early-succession* classes at a rate of 0.2/year, which also shift ages by two years upon entering the recipient class. For the Mojave phytoregions, the *climate change conversion* approach is the traditional one used in most biophysical settings.

Literature from LANDFIRE Model Tracker:

Anderson, J. E. and R. S. Inouye 2001. Landscape-scale changes in plant species abundance and biodiversity of a sagebrush steppe over 45 years. Ecological Monographs 71:531-556.

Biondi, F., Kozubowski. T.J., Panorska, A.K., and L. Saito. 2007. A new stochastic model of episode peak and duration for eco-hydro-climatic applications. Ecological Modelling 211:383-395.

Brown, David E., ed. 1982. Biotic communities of the American Southwest--United States and Mexico. Desert Plants: Special Issue. 4(1-4): 342 p.

Burkhardt, W. J. and E. W. Tisdale. 1969. Nature and successional status of western juniper vegetation in Idaho. Journal of Range Management 22(4):264-270.

Burkhardt, W. J. and E. W. Tisdale. 1976. Causes of juniper invasion in southwestern Idaho. Ecology 57: 472-484.

Crawford, J. A., R. A. Olson, N. E. West, J. C. Mosley, M. A. Schroeder, T. D. Whitson, R. F. Miller, M. G. Gregg, and C. S. Boyd. 2004. Ecology and management of sage-grouse and sage-grouse habitat. Journal of Range Management 57:2-19.

Hironaka, M., M. A. Fosberg, and A. H. Winward. 1983. Sagebrush-Grass Habitat Types of Southern Idaho. University of Idaho Forest, Wildlife and Range Experiment Station, Bulletin Number 35. Moscow, ID. 44p.

Houston, D. B. 1973. Wildfires in northern Yellowstone National Park. Ecology 54(5): 1111-1117.

Johnson, K. 2000. Artemisia tridentata ssp. vaseyana. In: Fire Effects Information System [Online], U.S. Dept. of Agriculture, Forest Service, Rocky Mountain Research Station, Fire Sciences Laboratory (Producer). Available: http://www.fs.fed.us/database/feis/ [2004, September 17].

Mozingo, H. N. 1987. Shrubs of the Great Basin: a natural history. University of Nevada, Reno, Nevada.

Miller, Richard E.; Fowler, Norma L. 1994. Life history variation and local adaptation within two populations of Bouteloua rigidiseta (Texas grama). Journal of Ecology. 82: 855-864.

Miller, R. F. and J. A. Rose. 1995. Historic expansion of Juniperus occidentalis (western juniper) in southeastern Oregon. The Great Basin Naturalist 55(1):37-45.

Miller, R. F. and J. A. Rose. 1999. Fire history and western juniper encroachment in sagebrush steppe. Journal of Range Management 52. Pp. 550-559.

Miller, R. F., T. J. Svejcar, and J. A. Rose. 2000. Impacts of western juniper on plant community composition and structure. Journal of Range Management 53(6):574-585.

Miller, R. F. and R. J. Tausch. 2001. The role of fire in juniper and pinyon woodlands: a descriptive analysis. Proceedings: The First National Congress on Fire, Ecology, Prevention, and Management. San Diego, CA, Nov. 27- Dec. 1, 2000. Tall Timbers Research Station, Tallahassee, FL. Miscellaneous Publication 11, p:15-30.

Mueggler, W. F. and W. L. Stewart. 1980. Grassland and shrubland habitat types of Western Montana. USDA Forest Service GTR INT-66.

Pedersen, E. K., J. W. Connelly, J. R. Hendrickson, and W. E. Grant. 2003. Effect of sheep grazing and fire on sage grouse populations in southeastern Idaho. Ecological Modeling 165:23-47.

Simon, S. A. 1990. Fire effects from prescribed underburning in central Oregon ponderosa pine plant communities: first and second growing season after burning. Pp. 93-109. In Fire in Pacific Northwest Ecosystems. Thomas E. Bedell, editor. Department of Rangeland Resources, Oregon State University, Covallis, OR. 145p.

Tart, D. L. 1996. Big sagebrush plant associations of the Pinedale Ranger district. Pinedale, WY: USDA For. Serv. Bridger-Teton National Forest. Jackson, WY. 97 p.

Welch, B. L, C. Criddle. 2003. Countering Misinformation Concerning Big Sagebrush. Research Paper RMRS-RP-40. Ogden, UT: U.S. Department of Agriculture, Forest Service, Rocky Mountain Research Station. 28 p.

Winward, A. H. 1991. A renewed commitment to management in sagebrush grasslands. In: Management in the Sagebrush Steppes. Oregon State University Agricultural Experiment Station Special Report 880. Corvallis OR. Pp.2-7.

Winward, A. H. 2004. Sagebrush of Colorado; taxonomy, distribution, ecology, & management. Colorado Division of Wildlife, Department of Natural Resources, Denver, CO.

State-and-Transition Model:

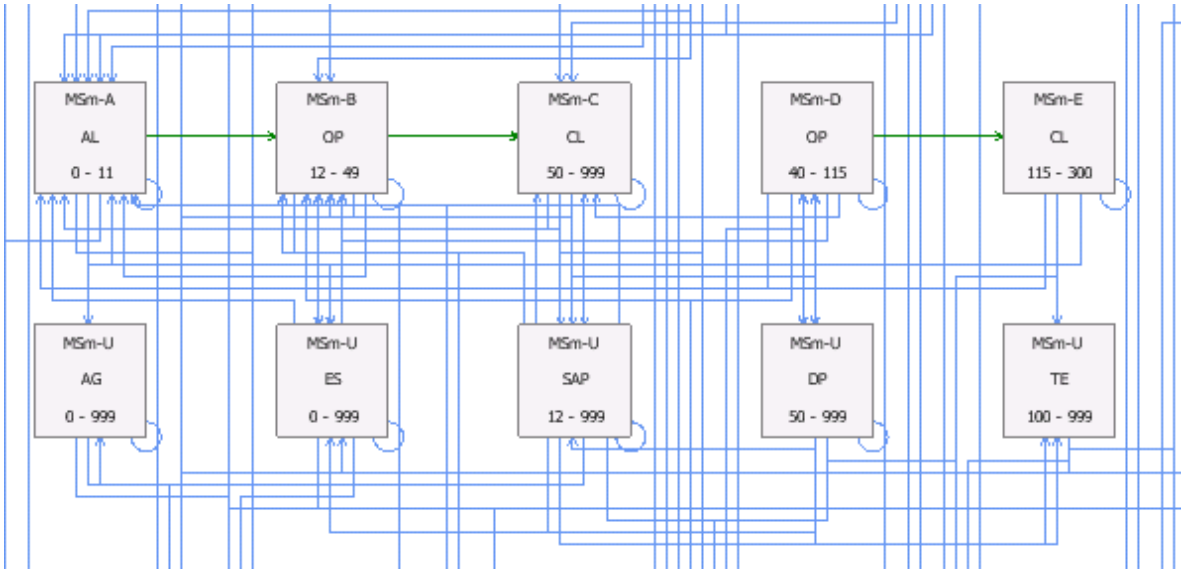

Mountain Shrub (MSb) 1086

Area of Application and Context:

- **Nevada Wildlife Action Plan revision**
- **Livestock grazing**
- **Full fire suppression management**
- **Date created: 2011**

Vegetation classes:

- *A-**Early***: 0-10% canopy of Utah snowberry/antelope bitterbrush; 10-80% grass/forb cover; 0-12 yrs
- *B-**Mid-closed***: 11-30% cover of Utah snowberry/antelope bitterbrush; >50% herbaceous cover; 13-38 yrs
- *C-**Late-closed*:** 31-50% cover of Utah snowberry/antelope bitterbrush/mountain big sagebrush; 25-50% herbaceous cover, <10% conifer sapling cover; 38+ yrs
- *D-**Late-open***: 10-20% pinyon pine-white fir cover <5m; 25-40% cover of Utah snowberry/antelope bitterbrush/mountain big sagebrush; <30% herbaceous cover; 80-129 yrs;
- *U*-DP: ***Depleted***: 20-50% cover of Utah snowberry/antelope bitterbrush/mountain big sagebrush; <5% herbaceous cover; <10% pinyon sapling cover
- *U-ES*: ***Early*-Shrub**: 20-50% cover rabbitbrush species
- *U*-SAP: ***Shrub-Annual-Grass-Perennial-Grass***: 20-50% cover of Utah snowberry/antelope bitterbrush/mountain big sagebrush; >5% cover of native
- *U-TE:* ***Tree-Encroached:*** >21% pinyon pine-white fir cover 10-25m; <5% shrub cover; <5% herbaceous cover

Reference Condition:

- **Natural Range of Variability**

  *A-**Early**:* 7%:
  *B-**Mid-closed**:* 23%
  *C-**Late-closed**:* 41%
  *D-**Late-open**:* 29%
  U: 0%

Succession:

This biophysical setting is considered a special case of montane sagebrush steppe-upland with mountain shrubs (serviceberry, Stansbury cliffrose, or bitterbrush) providing a clear community signature. Succession follows the 4-box pathway with vegetation starting as predominantly herbaceous with resprouting shrubs and ending with pinyon, juniper, or white fir dominance and a viable shrub and herbaceous understory. Deterministic succession transitions occur at the following ages:

- *Early-succession* to *mid-succession open*: 4 years
- *Mid-succession open* to *mid-succession closed*: 19 years

- *Mid-succession closed* to *late-succession closed*: 79 years

Natural Disturbances:

Replacement fire is the primary stochastic disturbance. Because the biophysical setting is generally small and widespread, the source of fire is importation from the surrounding biophysical settings, which would be mostly montane sagebrush steppe-upland. *Replacement fire* restarts the succession clock to age zero within the reference condition, which was labeled the *early-succession* or *MSh-A* class. The mean return interval of *replacement fire* changes with vegetation classes: from 80 years (0.0125/year) in the *early-succession* class (*MSh-A*), 50 years (0.02/year) in the *mid-succession closed* class (*MSh-B*), 40 years (0.025/year) in the *late-succession closed* class (*MSh-C*), to 149 years (0.0067/year) in the more wooded *late-succession open* class (*MSh-D*).

Replacement fire in vegetation classes that already experienced a threshold transition also causes a threshold transition to other uncharacteristic classes:

- In all phytoregions, the *early shrub* class *(ES)* burns as a self-loop at a rate of 0.02/year (50 years);
- In all phytoregions, the *depleted* class *(DP)* converts to the *early shrub* class *(ES)* at a rate of 0.02/year (50 years), except in the Columbia Plateau phytoregions where the rate is 0.025/year (40 years);
- In the Columbia Plateau phytoregions where being more north allows for more moisture, 10% of the *shrubs with mixed annual and perennial grass* class *(SAP)* converts to the *early-succession open* class *(MSh-A)* at a rate of 0.025/year (40 years), whereas the remaining 90% of the vegetation stays in *shrubs with mixed annual and perennial grass* class *(SAP),* but with its age reset at zero;
- In the Mojave Desert phytoregions where Stansbury's cliffrose often replaces serviceberry, 5% of the *shrubs with mixed annual and perennial grass* class *(SAP)* converts to the *early-succession open* class *(MSh-A)* at a rate of 0.025/year (40 years), whereas the remaining 95% of the vegetation stays in *shrubs with mixed annual and perennial grass* class *(SAP),* but with its age reset at zero;
- In all phytoregions except those in the Columbia Plateau and Mojave Desert, the *shrubs with mixed annual and perennial grass* class *(SAP)* resets the class completely age zero within the same class at a rate of 0.025/year (40 years); and
- The *tree-encroached* class *(TE)* converts to the *early shrub* class *(ES)* with a mean fire return interval of 150 years (rate of 0.0067/year).

Drought generally creates tree and shrub mortality under the assumption that prolonged and decreased soil moisture weakened plants that might ultimately be killed by insects or disease. Therefore, we do not double-count mortality. A *drought* return interval rate of every 179 years (a rate of 0.0056/year) was used based on the frequency of severe drought intervals estimated by Biondi *et al*. (2007) from 2,300 years of western juniper (*Juniperus occidentalis)* tree ring data from the Walker River drainage of eastern California and western Nevada. Although we recognize that droughts may be more common than every 179 years, severe droughts, which are >7-year drought events with consecutive far-below average soil moisture (narrow tree rings), kill naturally drought resistant shrubs and trees. For vegetation classes in the reference condition, drought induced mortality either causes a transition to the previous succession class (10%) or a reversal of woody succession within the same vegetation class (90%). In the *early-succession* class (*MSh-A*), woody succession is reversed to age 0. In uncharacteristic classes, *drought* causes 10% of selected pixels to transition to the *early shrub* class (*ES*) from the

depleted class *(DP)* and the *tree-encroached* class (*TE*), while the remainder is retained in the *depleted (DP)* and *tree encroached (TE)* classes, respectively. In the Columbia Plateau and Mojave phytoregions, the s*hrubs with mixed annual and perennial grass* class *(SAP)* converts 5% to *early-succession open* class (*MSh-A),* and the rest remains within the class. In the Eastern Sierra Nevada and Great Basin phytoregions, this increases to 10% that converts to *early-succession open* class (*MSh-A).*

Tree invasion differs from *tree-encroachment* by representing the beginning of tree dominance in shrublands and does not cause the elimination of the understory (the understory might already be suppressed, however, before tree invasion); however, *tree invasion* only affects the uncharacteristic *depleted* class *(DP)* and s*hrubs with mixed annual and perennial grass* class *(SAP)*, where they transition to the *tree encroached* class *(TE)* at a rate of 0.01/year (100 years) starting in year 50. This rate approximately allows tree invasion to follow the three phases of invasion of pinyon and juniper in sagebrush shrublands (Miller and Tausch 2001).

Tree-encroachment of shrublands by pinyon, juniper, or white fir occurs when trees have been present long enough to eliminate the shrub and herbaceous understory. We assume that this process starts 250 years within the succession. *Tree-encroachment* in the *late-succession open* class (*MSh-D*) causes a transition to the *tree-encroached* class (*TE*) at a rate of 0.02/year starting in year 250.

Annual grass invasion affects all reference classes and the *depleted* class *(DP)* within the Columbia Plateau and Mojave phytoregions, where they are all converted to the *shrubs with mixed annual and perennial grass* class *(SAP).* This applies to the remaining phytoregion as well, with the exception that the *early-succession open* (*MSh-A)* class is not affected.

- In the Mojave phytoregions, the *early-succession* class *(MSh-A)* and the *late-succession open* class (*MSh-D)* are affected at a negligible rate of 0.0001/year (1 out of 10,000 pixels per year);
- *The mid-succession closed* class *(MSh-B)* and *depleted* class *(DP)* transition at a rate of 0.001/ year (1,000) years in all phytoregions. The *early-succession, late-succession closed,* and *late-succession open* classes (*MSh-A, C, D)* in the Columbia Plateau and in the Mojave phytoregions transition at a rate of 0.001/year.
- In the Eastern Sierra Nevada and Great Basin phytoregions, the *late-succession closed and open* classes *(MSh-C and D)* transition at a rate of 0.005/year.

Managed herbivory applies to all reference classes at a rate representing 5% of the grazable area in a phytoregion (this implementation rate represents an average stocking rate that overrides the 5%/year rate in the models). In *mid-succession closed* class *(MSh-B)* and *late-succession closed* class *(MSh-C)*, *managed herbivory* is a self-loop that simply moves forward woody succession by one year when a pixel is selected to indicate that livestock preferentially selects herbaceous vegetation over woody vegetation. *Managed herbivory* is present, but has no effect on woody succession in the *early-succession* class *(MSh-A)* and *late-succession open* class *(MSh-D).*

Excessive herbivory affects the same classes as *managed herbivory* at a rate of 0.001/year. The rate of 0.001/year, however, is replaced by an implementation rate equal to 0.1% of the grazable are in the phytoregion shared among all vegetation classes (i.e., all grazable classes compete for livestock). The rate of *excessive herbivory* is low because its effects are localized to water sources and pathways close to water sources; therefore, a very small proportion of the landscape is affected. Excessive herbivory causes the following changes:

- *The early-succession* class *(MSh-A)* converts to the *early-shrub* class *(ES)*;

- The *mid-succession closed* class *(MSh-B)* and *late-succession closed* class *(MSh-C)* convert to the *depleted* class *(DP)*;
- In the Columbia Plateau and Mojave phytoregions, the *late-succession open* class (MSh-D) converts to t*ree encroached* class (TE); and
- In the Great Basin and Eastern Sierra Nevada phytoregions The *late-succession open* class *(MSh-D)* converts to the *depleted* class *(DP)* from ages 80 to 149 years and to the *tree-encroached* class *(TE)* for ages >149 years.

Natural recovery affects the *early shrub (ES)* class. From ages 5-19 years, the *early shrub* class *(ES)* converts to *mid-succession closed* class (*MSh-B)*, to the *late-succession closed* class (*MSh-C)* from ages 20-80 years.

Climate change conversion has a very complicated effect on mountain shrub. Conversion is also age dependent. In the Eastern Sierra Nevada, Great Basin and Columbia Plateau phytoregions, the rate of conversion is 0.008/year (125 years) and all classes are transformed, whereas the rate increases to 0.18/year (6 years) and is limited to two classes in the Mojave phytoregions. The primary reason for this difference is that the mountain shrub biophysical setting in the northern phytoregions shares the same shrub species as the big sagebrush systems they convert to (therefore only the potential needs to change, not fundamentally the species composition), whereas entirely different species of shrub (e.g., Stansbury cliffrose) are involved in the Mojave Desert.

- In the Mojave phytoregions:

  - The e*arly-succession open* class (MSh-A) converts to the chaparral *early-succession open* class *(Chp-A)*; and
  - The e*arly shrub* class *(ES)* converts to the chaparral *early-succession open* class *(Chp-A).*

- In the Columbia Plateau phytoregions, all changes cause a 50%-50% split in conversion between the big sagebrush steppe and big sagebrush upland biophysical settings:

  - The *early-succession open* class (*MSh-A*) converts to the *early-succession open* classes (*BSS-A* and *BSu-A*);
  - The m*id-succession closed* class (*MSh-B*) converts to *early-succession* classes (*BSS-A* from ages 5 to 10 years and BSu-A from ages 5 to 11 years) and to the *mid-succession open* class *(BSu-A)* from ages 12 to 19 years;
  - Fifty percent of the *late-succession closed class* (MSh-C) converts to the big sagebrush steppe *mid-succession open* classes (*BSS-B*) from ages 20 to 59 years and to the *late-succession closed* class *(BSS-C)* from ages 60 to 79 years, whereas the remaining 50% converts to the big sagebrush upland *mid-succession open* classes (*BSS-B*) from ages 20 to 49 years and to the *late-succession closed* class *(BSS-C)* from ages 50 to 79 years;
  - The *late-succession open* class (*MSh-D*) converts to big sagebrush steppe *mid-succession closed* class (*BSS-C*) and to the big sagebrush upland *late-succession open* class *(BSu-D)* from ages 80 to 114 years and *late-succession closed* class *(BSu-E)* for ages >114 years;
  - The e*arly shrub (ES)* converts to big sagebrush steppe and big sagebrush upland *early shrub* (*BSS-ES* and *BSu-ES*);
  - The *shrubs with mixed annual and perennial grass* (*SAP*) converts to the *shrubs with mixed annual* and *perennial grass* class (*BSS-SAP* and *BSu-SAP*); and
  - The *tree-encroached* class *(TE)* converts to the big sagebrush steppe *trees with annual grass* (*BSS-TA*) and to the big sagebrush upland *tree encroached* class *(BSu-TE).*

- In the Eastern Sierra Nevada and Great Basin phytoregions, the pathway of conversion are similar but the percentages of conversion differ with 10% transforming into big sagebrush steppe and 90% in big sagebrush upland.

Literature from LANDFIRE Model Tracker:

Anderson, J. E. and R. S. Inouye 2001. Landscape-scale changes in plant species abundance and biodiversity of a sagebrush steppe over 45 years. Ecological Monographs 71:531-556.

Biondi, F., Kozubowski. T.J., Panorska, A.K., and L. Saito. 2007. A new stochastic model of episode peak and duration for eco-hydro-climatic applications. Ecological Modelling 211:383-395.

Brown, David E., ed. 1982. Biotic communities of the American Southwest--United States and Mexico. Desert Plants: Special Issue. 4(1-4): 342 p.

Burkhardt, W. J. and E. W. Tisdale. 1969. Nature and successional status of western juniper vegetation in Idaho. Journal of Range Management 22(4):264-270.

Burkhardt, W. J. and E. W. Tisdale. 1976. Causes of juniper invasion in southwestern Idaho. Ecology 57: 472-484.

Crawford, J. A., R. A. Olson, N. E. West, J. C. Mosley, M. A. Schroeder, T. D. Whitson, R. F. Miller, M. G. Gregg, and C. S. Boyd. 2004. Ecology and management of sage-grouse and sage-grouse habitat. Journal of Range Management 57:2-19.

Hironaka, M., M. A. Fosberg, and A. H. Winward. 1983. Sagebrush-Grass Habitat Types of Southern Idaho. University of Idaho Forest, Wildlife and Range Experiment Station, Bulletin Number 35. Moscow, ID. 44p.

Houston, D. B. 1973. Wildfires in northern Yellowstone National Park. Ecology 54(5): 1111-1117.

Johnson, K. 2000. Artemisia tridentata ssp. vaseyana. In: Fire Effects Information System [Online], U.S. Dept. of Agriculture, Forest Service, Rocky Mountain Research Station, Fire Sciences Laboratory (Producer). Available: http://www.fs.fed.us/database/feis/ [2004, September 17].

Mozingo, H. N. 1987. Shrubs of the Great Basin: a natural history. University of Nevada, Reno, Nevada.

Miller, Richard E.; Fowler, Norma L. 1994. Life history variation and local adaptation within two populations of Bouteloua rigidiseta (Texas grama). Journal of Ecology. 82: 855-864.

Miller, R. F. and J. A. Rose. 1995. Historic expansion of Juniperus occidentalis (western juniper) in southeastern Oregon. The Great Basin Naturalist 55(1):37-45.

Miller, R. F. and J. A. Rose. 1999. Fire history and western juniper encroachment in sagebrush steppe. Journal of Range Management 52. Pp. 550-559.

Miller, R. F., T. J. Svejcar, and J. A. Rose. 2000. Impacts of western juniper on plant community composition and structure. Journal of Range Management 53(6):574-585.

Miller, R. F. and R. J. Tausch. 2001. The role of fire in juniper and pinyon woodlands: a descriptive analysis. Proceedings: The First National Congress on Fire, Ecology, Prevention, and Management. San Diego, CA, Nov. 27- Dec. 1, 2000. Tall Timbers Research Station, Tallahassee, FL. Miscellaneous Publication 11, p:15-30.

Mueggler, W. F. and W. L. Stewart. 1980. Grassland and shrubland habitat types of Western Montana. USDA Forest Service GTR INT-66.

Pedersen, E. K., J. W. Connelly, J. R. Hendrickson, and W. E. Grant. 2003. Effect of sheep grazing and fire on sage grouse populations in southeastern Idaho. Ecological Modeling 165:23-47.

Simon, S. A. 1990. Fire effects from prescribed underburning in central Oregon ponderosa pine plant communities: first and second growing season after burning. Pp. 93-109. In Fire in Pacific Northwest Ecosystems. Thomas E. Bedell, editor. Department of Rangeland Resources, Oregon State University, Covallis, OR. 145p.

Tart, D. L. 1996. Big sagebrush plant associations of the Pinedale Ranger district. Pinedale, WY: USDA

For. Serv. Bridger-Teton National Forest. Jackson, WY. 97 p.
Welch, B. L, C. Criddle. 2003. Countering Misinformation Concerning Big Sagebrush. Research Paper RMRS-RP-40. Ogden, UT: U.S. Department of Agriculture, Forest Service, Rocky Mountain Research Station. 28 p.
Winward, A. H. 1991. A renewed commitment to management in sagebrush grasslands. In: Management in the Sagebrush Steppes. Oregon State University Agricultural Experiment Station Special Report 880. Corvallis OR. Pp.2-7.
Winward, A. H. 2004. Sagebrush of Colorado; taxonomy, distribution, ecology, & management. Colorado Division of Wildlife, Department of Natural Resources, Denver, CO.

State-and-Transition Model:

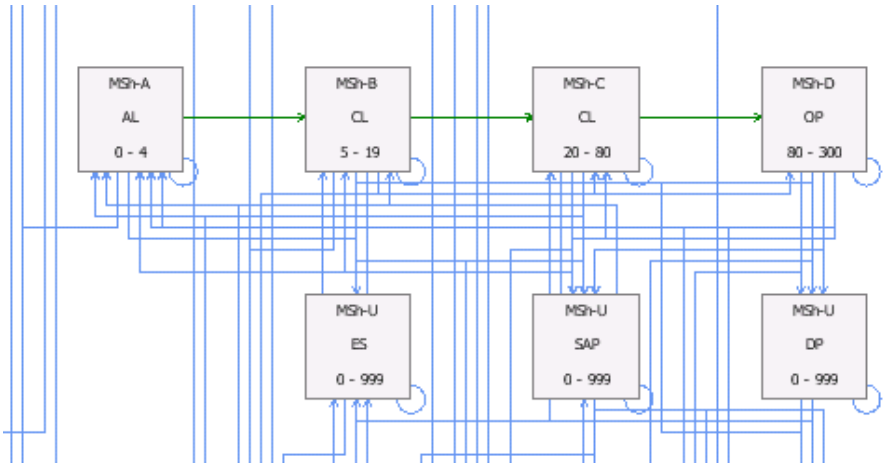

Paloverde Mixed Cacti(PMC) 1109

Area of Application and Context:

- **State Wildlife Action Plan**
- **Livestock grazing possible: this biophysical setting is so small within the tip of southern Nevada, that livestock grazing, if even present outside of Desert Tortoise Management areas, would not be an important part of this model**
- **Full fire suppression management**
- **Date created: 2011**

Vegetation classes:

- *A:* ***Early-open***: 5-30% herbaceous cover dominated by brittlebrush (*Encelia farinosa*); 0-19 yrs
- *B*: ***Mid-open***: 5-30% cover of brittlebrush with woody succulents and woody early-succession plants growing beneath the brittlebrush canopy; 20-94 yrs
- *C:* ***Late-closed***: 5-30% cover of white bursage (*Ambrosia dumosa*); 10-30% cover of succulents and small tree-dominated communities (*Carnegiea gigantea*, *Parkinsonia* spp., *Ferocactus* spp., *Fouqueria splendens*, *Acacia greggii*, and *Olneya tesota*); >95 yrs

Reference Condition:

- **Natural Range of Variability** *(Only found in the Mojave phytoregion)*

  *A-**Early**:* 15%
  *B-**Mid-open***: 19%
  *C-**Late-closed***: 76%
  U: 0%

Succession:

Succession follows the 3-box pathway with vegetation starting as predominantly dominated by brittlebrush and ending with a sometimes diverse community of *Ambrosia*, succulents, and small desert trees. Deterministic-*succession* transitions occur between the three boxes:

- *Early-succession* to *mid-succession open*: 19 years
- *Mid-succession open* to *late-succession closed*: 94 years.

Natural Disturbances:

Very few natural disturbances affect paloverde mixed cacti: *drought*, *replacement fire*, and *freeze*. The biophysical setting is not fire adapted.

With fuels accumulating during succession, *replacement fire* occurs in the *late-succession closed* class (*PMC-C),* where it converts completely to *early-succession* class *(PMC-A)* at a low rate of 0.001/year (1,000 years). This low rate arbitrarily represents rare events.

A low *drought* return interval rate of every 1,000 years (a rate of 0.001/year) is used, as opposed to the

severe drought return interval of 179 years we obtained from Biondi et al. (2010) for other models in the WAP, because the Nevada occurrence of this highly drought-adapted biophysical would be located in the moistest part of his distribution. The 1,000-year interval used here is from the original LANDFIRE model and simply indicates the rarity of this disturbance. The *mid-succession open* and *late-succession closed* classes *(PM-B* and *C)* transition to the *early-succession* class (*PMC-A)* after drought.

The type of *freeze* that affects paloverde mixed cacti is hard and would need to last for several consecutive days. Such hard freezes are believed to be less common than 100-year events in the lower Colorado River region. Because weather records have not been kept long enough to show longer than 100-year events, the LANDFIRE experts who developed the original model arbitrarily chose 1,000-year *freeze* events. *Freezes* occur only in the *mid-succession open* and *late-succession closed* classes *(PM-B* and *C)*, where they both completely transition back to the *early-succession open* class (*PMC-A)* at the same low rate of 0.001/year (1,000 years).

Literature from LANDFIRE Model Tracker:

Anderson, H. E. 1982. Aids to Determining Fuel Models For Estimating Fire Behavior. Gen. Tech. Rep. INT-122. Ogden, UT: U.S. Department of Agriculture, Forest Service, Intermountain Forest and Range Experiment Station. 22 p.

Biondi, F., Kozubowski. T.J., Panorska, A.K., and L. Saito. 2007. A new stochastic model of episode peak and duration for eco-hydro-climatic applications. Ecological Modelling 211:383-395.

Brown, D. E. (editor) 1982. Biotic communities of the American Southwest -- United States and Mexico. Desert Plants 4:1-4): 1-342.

Brown, J. K. and J. K. Smith, eds. 2000. Wildland fire in ecosystems: effects of fire on flora. Gen. Tech. Rep. RMRS-GTR-42-vol. 2. Ogden, UT: U.S. Department of Agriculture, Forest Service, Rocky Mountain Research Station. 257 p.

Esque, T. C., C. R. Schwalbe, D. F. Haines, and W. L. Halvorson. 2004. Saguaros under siege: invasive species and fire. Desert Plants 20(1):49-55.

Hardy, C. C., K. M. Schmidt, J. P. Menakis, R. N. Samson. 2001. Spatial data for national fire planning and fuel management. Int. J. Wildland Fire. 10(3&4):353-372.

Humphrey, R. R. 1974. Fire in the deserts and desert grassland of North America. Pp. 365-400 in Fire and Ecosystems. Academic Press, New York.

Kuchler, A. W. 1964. Potential Natural Vegetation of the Conterminous United States. American Geographic Society Special Publication No. 36. 116 p.

McAuliffe, J. R. 1988. Markovian dynamics of simple and complex desert plant communities. American Naturalist 131:459-490.

McLaughlin, S. P. and J. E. Bowers. 1982. Effects of fire on a Sonoran Desert community. Ecology 63:246-248.

NatureServe. 2004. International Ecological Classification Standard: Terrestrial Ecological Classifications. Terrestrial ecological systems of the Great Basin US: DRAFT legend for Landfire project. NatureServe Central Databases. Arlington, VA. Data current as of 4 November 2004.

Schmidt, K. M., J. P. Menakis, C. C. Hardy, W. J. Hann, and D. L. Bunnell. 2002. Development of coarse-scale spatial data for wildland fire and fuel management. Gen. Tech. Rep. RMRS-GTR-87. Fort Collins, CO: U.S. Department of Agriculture, Forest Service, Rocky Mountain Research Station. 41 p. + CD.

Turner, R. M. J. E. Bowers, and T. L. Burgess. 1995. Sonoran Desert Plants: An Ecological Atlas. University of Arizona Press. 504 p.

U.S. Department of Agriculture, Forest Service, Rocky Mountain Research Station, Fire Sciences Laboratory (2002, December). Fire Effects Information System, [Online]. Available: http://www.fs.fed.us/database/feis/ [Accessed: 11/15/04].

State-and-Transition Model:

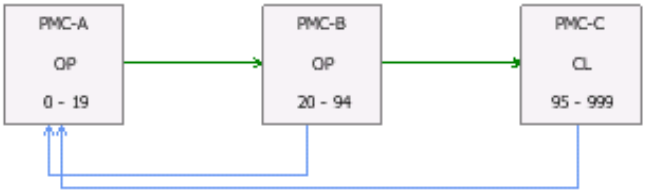

Pinyon-Juniper Woodland (PJ) 1019

Area of Application and Context:

- **Wildlife Action Plan revision**
- **Livestock grazing**
- **Fire suppression management**
- **Date created: 2011**

Vegetation classes:

- *A-**Early***: 5-20% herbaceous cover; 0-9 yrs
- *B-**Mid1-open***: 11-20% cover big sage or black sage <1.0m; 10-40% herbaceous cover; 10-29 yrs
- *C-**Mid2-open***: 11-30% cover of pinyon and/or juniper <5m; 10-40% shrub cover; <20% herbaceous cover; 30-99 yrs
- *D-**Late-open***: 31-50% cover of pinyon and/or juniper <5m-9m; 10-40% shrub cover; <20% herbaceous cover; >99 yrs
- *U-TA*: ***Tree-Annual-Grass***: 31-50% cover of pinyon and/or juniper <5m-9m; 10-40% shrub cover; <20% cheatgrass cover
- *U-AG*: ***Annual-Grass***: 5-30% cheatgrass cover; <10% shrub cover

Reference Condition:

- **Natural Range of Variability**

  *A-**Early**:* 2%
  *B-**Mid1-open**:* 6%
  *C-**Mid2-open**:* 19%
  *D-**Late-open**:* 73%
  U: 0%

Succession:

Succession follows the 4-box pathway with vegetation starting as predominantly herbaceous and ending with old (>300 years) pinyon and juniper and generally with a viable shrub and herbaceous understory. The succession pathway is entirely deterministic. Deterministic succession transitions occur at the following ages:

- *Early-succession* to *mid-succession open*: 9 years
- *Mid1-succession open* to *mid2-succession open*: 29 years
- *Mid2-succession open* to *late-succession open*: 99 years

Natural Disturbances:

Replacement fire restarts the succession clock to age zero within the reference condition, which was labeled the *early-succession* or *PJ-A* class. The *early-succession* class represents a native condition of woodlands with a dominant cover of usually annual early succession and perennial herbaceous species.

The mean return interval of *replacement fire* was 200 years (0.005/year) in the *early-succession* class (*PJ-A*), mid1-*succession open* class (*PJ-**A***), and *mid2-succession open* class (*PJ-C*). A lower rate of 0.003/year (333 years) is used for these classes in the Mojave phytoregions. A longer return interval of 500 years (0.002/year) is used in the *late-succession open* classes (*PJ-D*), but increases to 1,000 years (0.001/year) in the Mojave phytoregions. *Replacement fire* in vegetation classes that already experienced a threshold transition also causes a threshold transition to other uncharacteristic classes. The fire return interval is 200 years in the *tree with annual grass* class (*TA*), which causes a conversion to the *annual grass* class (*AG*). A 10-year fire cycle applies to the *annual grass* class (*AG*) and fire behaves as a self-loop.

Surface fire is present in older woodlands (*late-succession open* class or *PJ-D*) with a 1,000-year fire return interval (0.001/year) indicating rare events (Bauer and Weisberg 2009).

Drought is found in most classes and causes stand replacing events (generally 10% of times) or stand thinning (90% of times). In most cases *drought* creates tree and shrub mortality under the assumption that prolonged and decreased soil moisture weakens plants that might ultimately be killed by insects or disease. Therefore, we do not double-count mortality. A *drought* return interval rate of every 179 years (a rate of 0.0056/year) is used based on the frequency of severe drought intervals estimated by Biondi *et al*. (2007) from 2,300 years of western juniper (*Juniperus occidentalis)* tree ring data from the Walker River drainage of eastern California and western Nevada. Although we recognize that droughts may be more common than every 179 years, severe droughts, which are >7-year drought events with consecutive far-below average soil moisture (narrow tree rings), kill naturally drought resistant shrubs and trees. For vegetation classes in the reference condition, drought affects the *mid2-succession open* (*PJ-C*) and *late-succession* open (*PJ-D*) classes (i.e., not the first two classes of succession). The *mid2-succession closed* class (*PJ-C*) follows the pattern of 90% thinning within the class (to its beginning) and 10% to the previous succession class, *mid1-succession open* class (*PJ-B*), which assumes older trees are more affected. *Drought* behaves differently with the *late-succession open* class (*PJ-D*) because older trees become more vulnerable to the baseline 179-year return interval of severe *droughts* and additional insect attacks (both sources are assumed in the total 0.0168/year rate [60 years] for *drought* in the model). *Drought* effects to the *late-succession open* class (*PJ-D*) are partitioned into three pathways: 90% thinning within the class to age 100 year, 7% thinning to the previous class (*mid2-succession open* or *PJ-C*), and 3% to the *mid1-succession open* class (*PJ-B*) at a faster rate of 0.0067/year (150 years). The only uncharacteristic class affected is *tree with annual grass* class (*TA*), with 90% thinned within the class and 10% converted to the *annual grass* class (*AG*).

Annual grass invasion (*AG-invasion*) is set at a slow rate of 0.001/year (1 out of 1,000 pixels converted to a cheatgrass-invaded class per year) was chosen. A base rate of 0.001/year was estimated from data of northwest Utah collected by the Utah Division of Wildlife Resources in black sagebrush semi-desert. Black sagebrush semi-desert is usually considered more resistant to cheatgrass invasion than Wyoming big sagebrush semi-desert or other big sagebrush dominated biophysical settings. The soils of pinyon-juniper woodlands are either harsher or similar to those of black sagebrush. *Annual grass invasion* (*AG-invasion*) started in the *mid2-succession open* class (*PJ-C*) and continued in the *late-succession open* class (*PJ-D*), causing a transition to the *tree with annual grass* class (*TA*).

Climate change conversion (CC-Conversion) only affects the *early-succession open* class (*PJ-A)* and the *annual grass* class *(AG)* at the same rate of 0.59/year (1.7 years) from years 0 to 1 (pixels enter the recipient biophysical settings at age 2 to avoid a double conversion in two time steps).

- Ten percent of the *early-succession open* class *(PJ-A)* converts to low-black sagebrush *early-*

succession open class *(LBS-A),* whereas the remaining 90% converts to Wyoming big sagebrush *early-succession open* class *(WS-A)*;

- Ten percent of the *annual grass* class *(AG)* converts to the low-black sagebrush *annual grass* class *(LBS-AG)* with the remaining converting to the Wyoming sagebrush *annual grass* class *(WS-AG)*.

In the Mojave region the rate increases to 0.95/year (1 year), but the recipient classes and percentages of conversions changes to 50% to blackbrush mesic *(BM-A and AG)* and 50% to low-black sagebrush *(LBS-A and AG)*.

Literature cited in LANDFIRE's Model Tracker:

Alexander, R. R, F. Ronco, Jr. 1987. Classification of the forest vegetation on the National Forests of Arizona and New Mexico. Res. Note RM-469. Fort Collins, CO: U.S. Department of Agriculture, Forest Service, Rocky Mountain Forest and Range Experiment Station. 10 p.

Anderson, H. E. 1982. Aids to Determining Fuel Models For Estimating Fire Behavior. Gen. Tech. Rep. INT-122. Ogden, UT: U.S. Department of Agriculture, Forest Service, Intermountain Forest and Range Experiment Station. 22 p.

Arno, S. F. 2000. Fire in western forest ecosystems. In: Brown, James K.; Kapler-Smith, Jane, eds. Wildland fire in ecosystems: Effects of fire on flora. Gen. Tech. Rep. RMRS-GTR-42-vol. 2. Ogden, UT: U.S. Department of Agriculture, Forest Service, Rocky Mountain Research Station: 97-120.

Baker, W. L. and D. J. Shinneman. 2004. Fire and restoration of pińon-juniper woodlands in the western United States. A review. Forest Ecology and Management 189:1-21.

Barney, MA. And NC Frischknecht. 1974. Vegetation changes following fire in the Pinyon-Juniper type of West-Central Utah. Jour. Range Manage. 27:91-96

Bauer JM, Weisberg PJ (2009) Fire history of a central Nevada pinyon-juniper woodland. Canadian Journal of Forest Research 39: 1589-1599.

Biondi, F., Kozubowski. T.J., Panorska, A.K., and L. Saito. 2007. A new stochastic model of episode peak and duration for eco-hydro-climatic applications. Ecological Modelling 211:383-395.

Bradley, A. F., N. V. Noste, and W. C. Fischer. 1992. Fire Ecology of Forests and Woodlands in Utah. Gen. Tech. Rep. GTR- INT-287. Ogden, UT: U.S. Department of Agriculture, Forest Service, Intermountain Research Station. 127 p.

Brown, J. K. and J. K. Smith, eds. 2000. Wildland fire in ecosystems: effects of fire on flora. Gen. Tech. Rep. RMRS-GTR-42-vol. 2. Ogden, UT: U.S. Department of Agriculture, Forest Service, Rocky Mountain Research Station. 257 p.

Despain, D.W., Mosely, J.C., 1990. Fire history and stand structure of a pinyon-juniper woodland at Walnut Canyon National Monument, Arizona. USDI National Park Service Technical Report No. 34. Cooperative National Park Resources Studies Unit, University of Arizona, Tucson AZ. 27p

Erdman, J. A. 1970. Pinyon-juniper succession after natural fires on residual soils of Mesa Verde, Colorado. Science Bulletin, Biological Series - -Volume XI, No. 2. Brigham Young University, Provo, UT. 26 p.

Everett, R. L. and , K. Ward. 1984. Early Plant Succession on Pinyon-Juniper Controlled Burns. Northwest Science 58:57-68.

Eyre, F. H., ed. 1980. Forest cover types of the United States and Canada. Washington, DC: Society of American Foresters. 148 p.

Goodrich, S. and B. Barber. 1999. Return Interval for Pinyon-Juniper Following Fire in the Green River Corridor, Near Dutch John, Utah. In: USDA Forest Service Proceedings RMRS-P-9.

Gruell, George E. 1999. Historical and modern roles of fire in pinyon-juniper. In: Monsen, Stephen B.; Stevens, Richard, compilers. Proceedings: ecology and management of pinyon-juniper communities

within the Interior West: Sustaining and restoring a diverse ecosystem; 1997 September 15-18; Provo, UT. Proceedings RMRS-P-9. Ogden, UT: U.S. Department of Agriculture, Forest Service, Rocky Mountain Research Station: 24-28.

Gruell, G. E., L. E. Eddleman, and R. Jaindl. 1994. Fire History of the Pinyon-Juniper Woodlands of Great Basin National Park. Technical Report NPS/PNROSU/NRTR-94/01. U.S. Department of Interior, National Park Service, Pacific Northwest Region. 27 p.

Hardy, C. C., K. M. Schmidt, J. P. Menakis, R. N. Samson. 2001. Spatial data for national fire planning and fuel management. Int. J. Wildland Fire. 10(3&4):353-372.

Hessburg, P.F., B. G. Smith, R. B. Salter, R. D. Ottmar., and E. Alvarado. 2000. Recent changes (1930s-1990s) in spatial patterns of interior northwest forests, USA. Forest Ecology and Management 136:53-83.

Kilgore, B.M. 1981. Fire in ecosystem distribution and structure: western forests and scrublands. P. 58-89. In: H.A. Mooney et al. (Technical Coordinators). Proceedings: Conference on Fire Regimes and Ecosystem Properties, Honolulu, 1978. Gen. Tech. Rep. WO-GTR-26.

Kuchler, A.W. 1964. Potential Natural Vegetation of the Conterminous United States. American Geographic Society Special Publication No. 36. 116 p.

Ogle, K. and V. DuMond. 1997. Historical Vegetation on National Forest Lands in the Intermountain Region. U.S. Department of Agriculture, Forest Service, Intermountain Region, Ogden, UT. 129 p.

Miller, R.F., and R.J. Tausch. 2001. The role of fire in juniper and pinyon woodlands: a descriptive analysis. Proceedings: The First National Congress on Fire, Ecology, Prevention, and Management; Nov. 27- Dec. 1, 2000; San Diego, CA. Tallahassee, FL: Tall Timbers Research Station, Miscellaneous Publication 11. p. 15-30.

NatureServe. 2004. International Ecological Classification Standard: Terrestrial Ecological Classifications. Terrestrial ecological systems of the Great Basin US: DRAFT legend for Landfire project. NatureServe Central Databases. Arlington, VA. Data current as of 4 November 2004.

Ott, J., E., E. D. McArthur, and S. C. Sanderson. 2001. Plant Community Dynamics of Burned and Unburned Sagebrush and Pinyon-Juniper Vegetation in West-Central Utah. In: Proceedings, USDA Forest Service RMRS-P-9. p. 177-190.

Romme, W. H., L. Floyd-Hanna, and D. Hanna. 2002. Ancient Pinyon-Juniper forests of Mesa Verde and the West: A cautionary note for forest restoration programs. In: Conference Proceedings – Fire, Fuel Treatments, and Ecological Restoration: Proper Place, Appropriate Time, Fort Collins, CO, April 2002. 19 p.

Rondeau, R. 2001. Ecological System Viability Specifications for Southern Rocky Mountain Ecoregion. Colorado Natural Heritage Program. 181p.

Schmidt, K. M., J. P. Menakis, C. C. Hardy, W. J. Hann, and D. L. Bunnell. 2002. Development of coarse-scale spatial data for wildland fire and fuel management. Gen. Tech. Rep. RMRS-GTR-87. Fort Collins, CO: U.S. Department of Agriculture, Forest Service, Rocky Mountain Research Station. 41 p. + CD.

Soule', P. T. and P. A. Knapp. 1999. Western juniper expansion on adjacent disturbed and near-relict sites. Journal of Range Management 52:525-533.

Soule', P. T. and P. A. Knapp. 2000. Juniperus occidentalis (western juniper) establishment history on two minimally disturbed research natural areas in central Oregon. Western North American Naturalist (60)1:26-33.

Stein, S. J. 1988. Fire History of the Paunsaugunt Plateau in Southern Utah. Great Basin Naturalist. 48:58-63.

Tausch, R. J., N.E. West, and A.A. Nabi. 1981. Tree Age and Dominance Patterns in Great Basin Pinyon-Juniper Woodlands. Jour. Range. Manage. 34:259-264.

Tausch, R. J. and N. E. West. 1987. Differential Establishment of Pinyon and Juniper Following Fire. The American Midland Naturalist 119(1). P. 174-184.

U.S. Department of Agriculture, Forest Service, Rocky Mountain Research Station, Fire Sciences

Laboratory (2002, December). Fire Effects Information System, [Online]. Available: http://www.fs.fed.us/database/feis/ [Accessed: 11/15/04].

Ward, K. V. 1977. Two-Year Vegetation Response and Successional Trends for Spring Burns in the Pinyon-Juniper Woodland. M.S. Thesis, University of Nevada, Reno. 54 p.

Wright, H. A., L. F. Neuenschwander, and C. M. Britton. 1979. The role and use of fire in Sagebrush-Grass and Pinyon-Juniper Plant Communities. Gen. Tech. Rep. INT-GTR-58. Ogden, UT: U.S. Department of Agriculture, Forest Service, Intermountain Research Station. 48 p.

Young, J. A., and R. A. Evans. 1978. Population Dynamics after Wildfires in Sagebrush Grasslands. Journal of Range Management 31:283-289.

Young, J. A., and R. A. Evans. 1981. Demography and Fire History of a Western Juniper Stand. Journal of Range Management 34:501-505.

State-and-Transition Model:

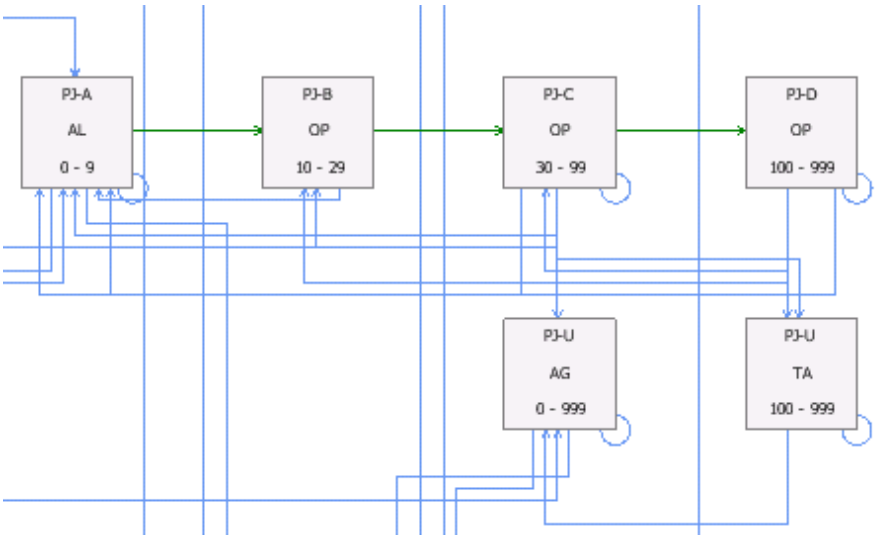

Ponderosa Pine (PP) 1054

Area of Application and Context:

Wildlife Action Plan revision

- **Livestock grazing, except in Great Basin National Park**
- **Fire suppression management**
- **Date created: 2011**

Vegetation classes:

- *A-**Early***: 0-60% cover of shrub/grass; conifer seedlings can be abundant <5m; 0-39yrs
- *B-**Mid-closed***: 31-60% cover of ponderosa pine, Douglas-Fir, and white fir 5-10m; dense shrub cover possible; 40-159yrs
- *C-**Mid-open***: 10-30% cover of ponderosa pine (dominant), Douglas-Fir, and limber pine 5-10m; abundant shrub and grass cover; 40-159 yrs
- *D-**Late-open***: 10-30% cover of ponderosa pine (dominant), Douglas-Fir, and limber pine 11-50m; abundant shrub and grass cover; >160 yrs
- *E-**Late-closed***: 31-80% cover of ponderosa pine, Douglas-Fir, and limber pine 11-50m; mountain snowberry common; >160 yrs
- *U-TA*: ***Trees with annual grass:*** 10-80% cover of young and older ponderosa pine and other conifers; >5% cheatgrass cover; native grass and shrubs present to abundant
- *U-AG*: ***Annual grass****:* >10% cheatgrass cover; trees largely absent; charred logs or standing dead trees often present; native grasses and forbs present to abundant

Reference Condition:

Natural Range of Variability (Not found in the Eastern Sierra Nevada phytoregion)

*A-**Early**:* 11%
*B-**Mid-closed**:* 2%
*C-**Mid-open**:* 34%
*D-**Late-open**:* 52%
*E-**Late-closed**:* 1%
U: *0%*

Succession:

Succession is a five-box model with two parallel succession pathways: the dominant succession is with an open canopy, whereas the other is closed. The closed pathway starts with a probabilistic alternative succession conditional on the time since the last fire:

- Open canopy pathway
  - *Early-succession* to *mid-succession open*: 39 years
  - *Mid-succession open* to *late-succession open*: 159 years
- Closed canopy pathway
  - *Early-succession* to *mid-succession closed*: probabilistic succession conditional upon the

absence of any fire for 38 consecutive years in a pixel

- *Mid-succession closed* to *late-succession closed*: 159 years

- Alternate succession (*AltSuccession*)

  - *Mid-succession open* to *mid-succession closed*: from 40 to 159 years conditional upon lack of any fire for 80 consecutive years
  - *Late-succession open* to *late-succession closed*: ≥160 years conditional upon lack of any fire for 100 consecutive years

An additional succession pathway occurs between the uncharacteristic *annual grass* class *(AG)* and the *tree with annual grass* class *(TA)* at age 39. The fire regimes of ponderosa pine and cheatgrass are compatible and we assume that cheatgrass will not harm ponderosa pine succession.

Natural Disturbances:

Fire is the dominant process in the ponderosa pine biophysical setting.

Replacement fire was present in all classes, but less frequent in the open classes with less fuel build-up. A mean fire return interval of 100 years (0.01/year) applies to the *early-succession* class (*PP-A*), whereas a 400-year fire return interval (0.0025/year) in used in the *mid-succession open* (*PP-C*) and *late-succession open* (*PP-D*) classes. In the closed pathways (*PP-B* and *E)* with more standing woody fuels and fuel ladders, the fire return interval is shorter at 150 years (0.0067/year) for both classes. In the uncharacteristic classes, the fire return interval is as short as 10 years (0.1/year) in the *annual grassland* class (*AG*) and longer (149 years or 0.0067/year) in the *tree with annual grass* class (*TA*). For both uncharacteristic classes, replacement fire caused a transition to the beginning of the *annual grass* class *(AG)*.

Mixed severity fire was more frequent in closed classes with a fire return interval varying from 25 years (0.04/year) in the *mid-succession closed* class (*PP-B*) to 20 years in the *late-succession closed* class (*PP-E*) due to more fuel build up transitioning in these classes. *Mixed severity fire* thins younger trees and results in a transition to the open classes while keeping the same succession age (older trees are generally preserved). The fire return interval lengthens to 36 years (0.028/year) in the *mid-succession open* and *late-succession open* classes (*PP-C* and *PP-D*). Thinning is within the class and woody succession is reverse by 10 years for burned pixels. *Mixed severity fire* also occurs in the *tree with annual grass* class (*TA*) at a return interval of 25 years (0.04/year); however, 25% of the burn causes a transition to the *annual grassland* class (*PP-AG*) but leaves 75% unaffected. The fire return interval increases to 50 years (0.02/year) within the *trees with annual grass (TA) class* and only 10% transitions to the *annual grass (AG)* within the Mojave phytoregion.

Surface fire only occurrs in the open succession classes and causes no transition. The fire return interval is 25 years (0.04/year) in the *mid-succession open* class *(PP-C)* and shorter at 20 years (0.05/year) in the *late-succession open* class *(PP-D)* class.

The *Insect/disease* disturbance has a 200-year return interval (0.005/year), which thins the *mid-succession closed* class (*PP-B*) towards the *mid-succession open* class (*PP-C*) class. The rate increases to 0.02/year (50 years) for the *late-succession closed* class (*PP-E),* which causes thinning to the *late-succession open* class *(PP-D). Insect/disease* outbreaks convert 10% of the uncharacteristic *tree with*

annual grass class *(TA*) to the *annual grassland* class (*AG*), whereas the remaining 90% suffers single tree mortality that is not sufficient to cause a change in succession age. The *late-succession closed class* (*PP-E*) is thinned to the *late-succession open* class (*PP-D*) by *insects and disease* with a return interval of 50 years (0.02/year). *Insect and disease* attacks are assumed greater in younger than older closed classes because intra-specific competition is stronger in the first decades of succession.

Senescence affects the *late-succession* class (*PP-D* and E*)* at a rate of 0.01/year (100 years) by causing them to revert to the previous open or closed class, respectively (*PP-C* and *B).* Without this disturbance, trees would grow beyond the known longevity of the species.

Annual grass invasion was weakly present in *mid-succession* and *late-succession closed* classes (*PP-B* and *E).* We use a very low and arbitrary rate of 0.0001/year (1,000 years) because the shade from closed canopies reduces greatly the productivity of the understory. Under more open canopies (*PP-C* and *D)*, the rate of *annual grass invasion* increases by 5 times to 0.005 (200 years), a rate more typical in other WAP models. All invasions cause a transition to the *tree with annual grass* class *(TA*) with succession age maintained.

Under the influence of tree competition and more moist soil conditions of the ponderosa pine biophysical setting, *natural recovery* allows a transition from the *tree with annual grass* class *(TA*) to the *mid-succession closed* class (*PP-B*) from ages 40 to 159 years and to the *late-succession closed* class (*PP-E*) from ages 160-500 years if there has been at least 30 years since a disturbance such as fire. The lack of disturbance guarantees that pixel will enter a closed canopy class.

Managed herbivory applies to all reference classes and the uncharacteristic *trees with annual grass* class *(TA)* at a rate representing 5% of the grazable area in a phytoregion (this implementation rate represents an average stocking rate that overrides the 5%/year rate in the models). Grazed pixel experience accelerated succession by one additional year to represent the preference of livestock for herbaceous species over woody species, thus favoring woody succession.

Excessive herbivory affected all reference classes and uncharacteristic class *trees with annual grass* class *(TA)* at the same rate of 0.001/year (1,000 years). The rate of 0.001/year, however, is replaced by an implementation rate equal to 0.1% of the grazable are in the phytoregion shared among all vegetation classes (i.e., all grazable classes compete for livestock). The rate of *excessive herbivory* is low because its effects are localized to water sources and pathways close to water sources; therefore, a very small proportion of the landscape is affected. Grazed pixels remain in their classes, but their age shifts forward by 5 years to represent the intense use of herbaceous species by livestock in restricted areas, thus favoring woody succession.

Climate change conversion only affects the *early-succession open* class (*PP-A)* and the uncharacteristic class *annual grass (AG)* at the same rate of 0.99/year (~1 year), however differently between phytoregions.

- In the Columbia Plateau phytoregions, the e*arly-succession open* class *(PP-A)* converts equally (50%-50%) to the curl-leaf mountain mahogany *early-succession open* class (*MM-A*) and the to the pinyon-juniper *early-succession open* class (*PJ-A*).
- In the Great Basin phytoregions, the e*arly-succession open* class (*PP-A*) converts equally (1/3,-1/3-1/3) to the chaparral *early-succession open* class (*CHp-A*), to the curl-leaf mountain mahogany *early-succession open* class (*MM-A*), and to the pinyon-juniper *early-succession open* class (*PJ-A*).

Literature cited in LANDFIRE's Model tracker:

Barrett, S. W. 1988. Fire Suppression effects on Forest Succession within a Central Idaho Wilderness. Western J. of Applied Forestry. 3(3):76-80. July 1988.

Barrett, S. W. 1994. Fire Regimes on the Caribou National Forest, Southern Idaho. Final Report – Contract No. 53-02S2-3-05071. September 1994.

Biondi, F., Kozubowski. T.J., Panorska, A.K., and L. Saito. 2007. A new stochastic model of episode peak and duration for eco-hydro-climatic applications. Ecological Modelling 211:383-395.

Bradley, A. F., W. C. Fischer, N. V. Noste. 1992. Fire Ecology of the Forest Habitat Types of Eastern Idaho and Western Wyoming. Intermountain Research Station, Ogden UT 84401. GTR-INT-290, 1992.

Bradley, A. F., N. V. Noste, and W. C. Fischer. 1992. Fire Ecology of the Forests and Woodland in Utah. Intermountain Research Station, Ogden UT 84401. GTR-INT-287, 1992.

Brown, A., S. W. Barrett, J. Menakis,1994. Comparing the Prescribed Natural Fire Program with Pre-settlement Fires in the Selway-Bitterroot Wilderness. Int. J. Wildland Fire 4(3): 157-168, 1994 @ IAWF.

Brown, J. K. and J. K. Smith, eds. 2000. Wildland fire in ecosystems: effects of fire on flora. Gen. Tech. Rep. RMRS-GTR-42-vol. 2. Ogden, UT: U.S. Department of Agriculture, Forest Service, Rocky Mountain Research Station. 257 p.

Crane, M. F. 1986. Fire Ecology of the Forest Habitat Types of Central Idaho. Intermountain Research Station, Ogden UT 84401. GTR-INT-218, 1986.

Kitchen, S. G. and E. D. McArthur. 2003. Ponderosa pine fire history in a marginal eastern Great Basin stand. Pages 152-156. In K. E. M. Galley, R. C. Klinger, and N. G. Sugihara (eds.). Proceedings of Fire Conference 2000: The first national congress on fire ecology, prevention, and management. Miscellaneous Publication 13, Tall Timbers Research Station, Tallahassee, FL.

Morgan, P., S. C. Bunting., A. E. Black, T. Merrill, and S. Barrett. 1996. Fire Regimes in the Interior Columbia River Basin: Past and Present. Final Report For RJVA-INT-94913: Course-scale classification and mapping of disturbance regimes in the Columbia River Basin. Submitted to: Intermountain Fire Science Lab., Intermountain Research Station, Missoula, Montana, USDA Forest Service.

Nachlinger, J. and G. A. Reese. 1996. Plant community classification of the Spring Mountains National Recreation Area, Clark and Nye Counties, Nevada. Report submitted to USDA Forest Service, Humboldt-Toiyabe National Forest.

Steele, R., R. D. Pfister, R. A. Ryker, and J. A. Kittams. 1981. Forest Habitat Types of Central Idaho. USDA For. Serv. Tech. Rep. INT-114, 138 p. Intermt. For. and Range Exp. Stn., Ogden, Utah 84401.

State-and-Transition Model (cropped):

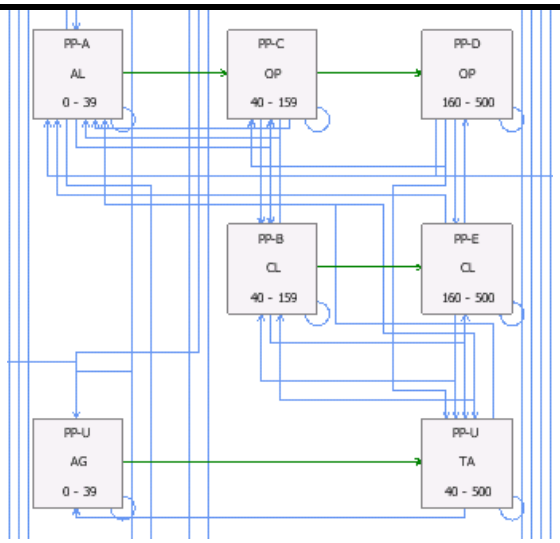
PP-A
AL
0 - 39
PP-C
OP
40 - 159
PP-D
OP
160 - 500
PP-B
CL
40 - 159
PP-E
CL
160 - 500
PP-U
AG
0 - 39
PP-U
TA
40 - 500

Semi-Desert Grassland (SDG) 1135

Area of Application and Context:

- **Nevada Wildlife Action Plan Revision**
- **Limited livestock grazing**
- **Fire suppression management**
- **Date created: 2011**

Vegetation classes:

- A-***Early***: 10-40% cover of grasses (Indian ricegrass and desert needlegrass, and in the Mojave Desert big galleta and bush muhly); <5% shrub cover (spiny menadora); 0-20 yrs
- *B-**Mid-Closed***: >25% cover of grasses (Indian ricegrass and desert needlegrass, and in the Mojave Desert big galleta and bush muhly); 5-25% shrub cover (spiny menadora)
- *U-DP***: *Depleted***: 5-30% shrub cover; < 10% cover of grasses; 10-30% bare ground cover
- *U-ES:* ***Early-Shrub***: 10-30% cover of rabbitbrush; 10-30% bare ground cover; <10% native grass cover
- *U-SAP:* ***Shrub-Annual-Grass-Perennial-Grass*****:** 5-30% shrub cover; 5-15% cover of annual grasses; native grasses may be present to common

Reference Condition:

- **Natural Range of Variability**

  *A-**Early**:* 18%
  *B-**Mid-closed**:* 82%
  U: 0 %

Succession:

Succession is simple in this two-box model:

- *Early-succession* to *mid-succession closed*: 20 years

Natural Disturbances:

Replacement fire reverts reference classes back to age 0 of the *early-succession* class *(SG-A)*. The fire return interval is 120 years (rate of 0.0083/year) in the *early-succession open* class *(SG-A)* and 94 years (rate of 0.0106/year) in the *mid-succession open class (SG-B). Replacement fire* also affects the uncharacteristic classes at different rates.

- The *depleted* class (*DP*) converts to the *early shrub* class (*ES*) at a rate of 0.005/year (200 years);
- The e*arly shrub* class (*ES*) burns as a self-loop at a rate of 0.0106/year (94 years), which resets the age to zero within the class;
- The *shrubs with mixed annual perennial grass* class (SAP) burns at a rate of 0.1/ year (10

years) from ages 0-19 years (thus behaving like a non-native annual grassland) and at a rate of 0.0106/year (94 years) from ages 20-300 years, which resets the age to zero within the class.

Drought only affects the *late-succession open* class *(SG-B)* and the uncharacteristic *shrubs with mixed annual and perennial grass* class *(SAP),* which are each retained in the same class and reset to age zero. A *drought* return interval rate of every 179 years (a rate of 0.0056/year) is used based on the frequency of severe drought intervals estimated by Biondi *et al*. (2007) from 2,300 years of western juniper (*Juniperus occidentalis)* tree ring data from the Walker River drainage of eastern California and western Nevada. Although we recognize that droughts may be more common than every 179 years, severe droughts, which are >7-year drought events with consecutive far-below average soil moisture (narrow tree rings), will kill naturally drought resistant species.

Managed herbivory applies to the *early-succession and mid-succession closed* classes (*SG-A and B)* at a rate representing 5% of the grazable area in a phytoregion (this implementation rate represents an average stocking rate that overrides the 5%/year rate in the models). Grazed pixel experience accelerated succession by two additional years to represent the preference of livestock for herbaceous species over woody species, thus favoring woody succession.

Excessive herbivory affects the *early-succession and mid-succession closed* classes (*SG-A and B)* at the same rate of 0.001/year (1,000 years). The rate of 0.001/year, however, is replaced by an implementation rate equal to 0.1% of the grazable are in the phytoregion shared among all vegetation classes (i.e., all grazable classes compete for livestock). The rate of *excessive herbivory* is low because its effects are localized to water sources and pathways close to water sources; therefore, a very small proportion of the landscape is affected. Grazed pixels of the *early-succession* class (SDG-A) are converted to the *early shrub* class (*ES*) by *excessive herbivory*. With *excessive herbivory*, the *mid-succession closed* class (*SDG-B*) transitions to the *early shrub* class (*ES*) from ages 20-74 and to the *depleted* class (*DP*) >74 years of age.

Annual grass invasion affects all reference classes and the *depleted* class converting each to the uncharacteristic class *shrubs mixed with annual grass* class *(SAP)* at a rate of 0.001/year (1,000 years). We assumed that sandy soils are generally resistant to annual grass invasion.

Native herbivory only affects the *early-succession open* class *(SG-A). Native herbivory* thins the class, therefore reverses woody succession by one year at a rate of 0.005/year (200 years).

Literature cited in LANDFIRE's Model Tracker:

Heyerdahl, E. K., D. Berry, and J. K. Agee. 1994. Fire history database of the western United States. Final report. Interagency agreement: U.S. Environmental Protection Agency DW12934530; U.S. Department of Agriculture, Forest Service PNW-93-0300; University of Washington 61-2239. Seattle, WA: U.S. Department of Agriculture, Pacific Northwest Research Station; University of Washington, College of Forest Resources. 28 p. [+ Appendices]. Unpublished report on file with: U.S. Department of Agriculture, Forest Service, Rocky Mountain Research Station, Fire Sciences Laboratory, Missoula, MT.

Howell, C., R. Hudson, B. Glover, and K. Amy. 2004. Resource Implementation Protocol for Rapid Assessment Matrices. USDA Forest Service, Humboldt-Toiyabe National Forest.

Kellogg, E. A. 1985. A biosystematic study of the Poa secunda complex. Journal of the Arnold Arboretum. 66: 201-242.

Martin, R. E., and J.D. Dell. 1978. Planning for prescribed burning in the Inland Northwest. Gen. Tech. Rep. PNW-76. Portland, OR: U.S. Department of Agriculture, Forest Service, Pacific Northwest Forest and Range Experiment Station. 67 p.

McKell, C. M. 1956. Some characteristics contributing to the establishment of rabbitbrush, Chrysothamnus spp. Corvallis, OR: Oregon State College. 130 p. Dissertation.

NatureServe. 2004. International Ecological Classification Standard: Terrestrial Ecological Classifications. Terrestrial ecological systems of the Great Basin US: DRAFT legend for Landfire project. NatureServe Central Databases. Arlington, VA. Data current as of 4 November 2004.

Plummer, A. P., A. C. Hull, Jr. G. Stewart, and J. H. Robertson. 1955. Seeding rangelands in Utah, Nevada, southern Idaho and western Wyoming. Agric. Handb. 71. Washington, DC: U.S. Department of Agriculture, Forest Service. 73 p.

Range, P., P. Veisze, C. Beyer,and G. Zschaechner. 1982. Great Basin rate-of-spread study: Fire behavior/fire effects. Reno, Nevada: U.S. Department of the Interior, Bureau of Land Management, Nevada State Office, Branch of Protection. 56 p.

USDA Forest Service Fire Effects Information System. Http://www.fs.fed.us/database/feis/plants /graminoid/achnel/fire_ecology.html

U.S. Department of Agriculture, Natural Resources Conservation Service. 2003. Range Ecological Sites, Major Land Resource Area 24. Central Nevada.

Young, R. P. 1983. Fire as a vegetation management tool in rangelands of the Intermountain Region. In: Monsen, S. B., and N. Shaw, compilers. Managing Intermountain rangelands--improvement of range and wildlife habitats: Proceedings; 1981 September 15-17; Twin Falls, ID; 1982 June 22-24; Elko, NV. Gen. Tech. Rep. INT-157. Ogden, UT: U.S. Department of Agriculture, Forest Service, Intermountain Forest and Range Experiment Station: 18-31.

Zschaechner, G. A. 1985. Studying rangeland fire effects: a case study in Nevada. In: Sanders, K. and J. Durham, eds. Rangeland fire effects: Proceedings of the symposium; 1984 November 27-29; Boise, ID. Boise, ID: U.S. Department of the Interior, Bureau of Land Management, Idaho State Office: 66-84.

State-and-Transition Model:

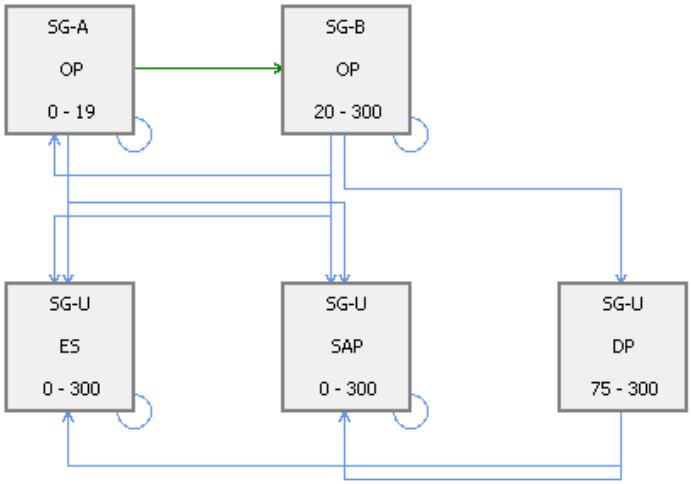

Spruce (SP) 1056

Area of Application and Context:

- **Nevada Wildlife Action Revision**
- **No livestock grazing due to steep terrain and season of use**
- **Fire suppression management**
- **Date created: 2011**

Vegetation classes:

- *A-**Early***: 0-100% cover of Engelman spruce seedling/shrub/grass <5m; 0-39 yrs;
- *B-**Mid-closed***: 40-100% cover of Engelman spruce and aspen 5-24m; 40-129yrs;
- *C-**Mid-open***: 0-40% cover of Engelman spruce 5-24m pole size; 40-129yrs;
- *D-**Late-closed***: 40-100% cover of Engelman spruce 25-49m; >129 yrs

Reference Condition:

- **Natural Range of Variability**

  *A-**Early**:* 18%
  *B-**Mid-closed**:* 38%
  *C-**Mid-open**:* 2%
  *D-**Late-closed**:* 42%
  U: 0%

Succession:

Succession is a four-box model with a dominant closed canopy succession and a probabilistic alternate succession to one class conditional on the time since the last fire:

- Closed canopy pathway
  - *Early-succession* to *mid-succession closed*: 39 years
  - *Mid-succession closed* to *late-succession closed*: 129 years
- Open canopy pathway
  - *Mid-succession open* to *late-succession closed*: 129 years
- Alternate succession
  - *Mid-succession open* to *mid-succession closed*: 40-129 years conditional upon lack of any fire for 60 consecutive years

Natural Disturbances:

Fire is the dominant process in the spruce biophysical setting.

Replacement fire was present in all classes. In the Columbia Plateau, a mean fire return interval of 100 years (0.01/year) from age 0 to 10 years and then 200 years (0.005/year) from ages 11 to 39 years apply

to the *early-succession* class (*SF-A*). In the remaining phytoregions, the rate is 0.005/year (200 years). The *mid-succession closed* class (*SF-B*) experiences fire about every 200 years (0.005/year) from age 40-69, and then it decreases to every 400 years (0.0025/year) from ages 70-129. The mean fire return interval is 125 years (0.008/year) in the *mid-succession open* class *(SF-C)*. The *late-succession closed* class (*SF-D*) experiences fire about every 250 years (0.004/year) due to accumulation of woody live and dead biomass.

Surface fire was present in all classes except the *early-succession* class and causes no transitions (but influences the time-since-disturbance function). The return interval is 400 years (0.0025/year) in the *mid-succession closed* class (*SF-B*) and as low as 714 years (0.0014/year) in the *late-succession closed* class (*SF-D*). The shortest return interval is 125 years (0.008/year) in the *mid-succession open* class (*SF-C*) where greater sunlight favors fine fuel growth.

A *drought* return interval rate of every 179 years (a rate of 0.0056/year) is used based on the frequency of severe drought intervals estimated by Biondi *et al*. (2007) from 2,300 years of western juniper (*Juniperus occidentalis)* tree ring data from the Walker River drainage of eastern California and western Nevada. Although we recognize that droughts may be more common than every 179 years, severe droughts, which are >7-year drought events with consecutive far-below average soil moisture (narrow tree rings), kill naturally drought resistant species. *Drought* only affects the *mid-succession closed and late-succession closed* classes (*SF-C* and *D*), causing benign internal thinning.

Insect/disease outbreaks are more widespread than *drought* events. A 143-year return interval (0.007/year) of *insect/disease* converts the *mid-succession closed* class (*SF-B*) to the *mid-succession open* class (*SF-C*). The return interval of *insect/disease* outbreaks increases to 500 years (0.002/year) in the *mid-succession open* (*SP-C*) and *late-succession closed* (*SF-D*) classes with 100% resulting in stand replacement.

Competition/maintenance slows down woody succession due to intra-specific crowding among young trees. A small rate of 0.002/year (500 years) applies to the *early-succession* class (*SF-A*); therefore, the age of a small number of selected pixels is stunted by -10 years (reversal of succession). The same process applies in the *mid-succession closed* class (*SF-B*), except that the rate is even smaller at 0.001/year (1,000 years).

Senescence only affects older trees in the *late-succession closed* class *(SF-D)* at a rate of 0.01/year; the opening of the stand causes a transition to the *mid-succession open* class (*SF-C*).

Climate change conversion affects the *early-succession open* class *(SF-A)* at a low rate of 0.38-0.4/year (minor differences among phytoregions). Selected pixels of this class convert to the mixed conifer *early succession open* class *(MC-A)* and the age of pixels are shifted forward by two years.

Literature cited in LANDFIRE's Model Tracker:

Biondi, F., Kozubowski. T.J., Panorska, A.K., and L. Saito. 2007. A new stochastic model of episode peak and duration for eco-hydro-climatic applications. Ecological Modelling 211:383-395.

Bradley, A. F., N. V. Noste, and W. C. Fisher. 1992. Fire ecology of forests and woodlands in Utah. Ge. Tech. Rep. INT-287. Ogden, UT: U.S. Department of Agriculture, Forest Service, Intermoutain Research Station. 128 p.

DeVelice, Robert L. et al. 1986. A Classification of Forest Habitat Types of Northern New Mexico and Southern Colorado. USDA, Forest Service. Rocky Mountain Forest and Range Experiment Station.

GTR RM-131.
Komarkova, Vera et al. 1988. Forest Vegetation of the Gunnison and Parts of the Uncompahgre National Forests: A Preliminary Habitat Type Classification. USDA Forest Service, Rocky Mountain Forest and Range Experiment Station. GTR RM-163.
Veblen, T. T., K. S. Hadley, E. M. Nel. T. Kitzberger, M. Reid,, R. Vellalba. 1994. Disturbance regime and disturbance interactions in a Rocky Mountain subalpine forest. Journal of Ecology 82:125-135.

State-and-Transition Model (cropped):

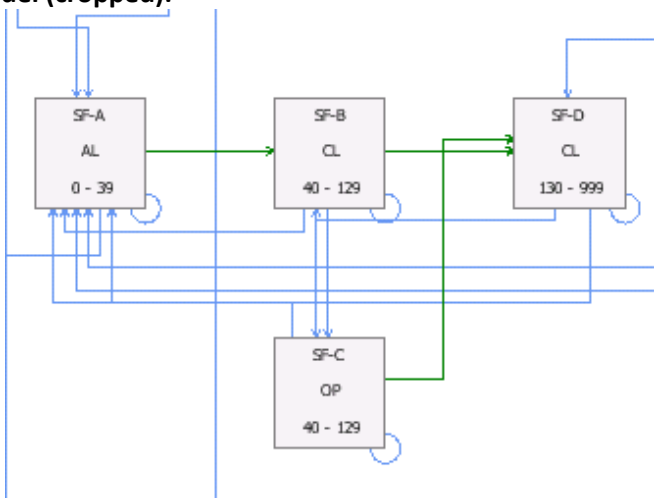

Subalpine Riparian (SR) 1160 (carbonate or non-carbonate; absent in the Mojave Desert)

Area of Application and Context:

- **Wildlife Action Plan Revision**
- **Livestock grazing**
- **Fire suppression management**
- **Date created: 2011**

Vegetation:

- *A-**Early***: 0-50% cover of willow, <3m; large patches of basin wildrye, sedges, and tufted grasses; 0-2 yrs
- *B-**Mid-closed***: 10-30% cover of mixed conifers 0-5m; aspen and willow abundant; large patches of basin wildrye, sedges, and tufted grasses; 3-22 yrs
- *C-**Late-open***: 31-50% cover of mixed conifers 5-10m; aspen and willow abundant; >22 yrs;
- *U-EF*: ***Exotic-Forbs***: >5% of thistle or other exotic forbs (tall whitetop, Russian knapweed, purple loosestrife); native woody shrubs and trees present to abundant; graminoids dominated patches may be present

Reference Condition:

- **Natural Range of Variability**

	E. Sierra Nevada	Elko, Calcareous, Lahontan, Walker, Mojave
*A-**Early***	4%	13%
*B-**Mid-open***	43%	58%
*C-**Late-closed***	53%	29%
U	0%	0%

Succession:

Succession follows the 3-box pathway with heterogeneous vegetation starting with willow and basin wildrye, and wet meadows and ending with a forested mix of willow, aspen, montane and subalpine conifers, and wet meadows. The succession pathway is entirely deterministic with transitions occurring at the following ages:

- *Early-succession* to *mid-succession closed*: 2 years
- *Mid-succession closed* to *late-succession open*: 22 years

Natural Disturbances:

Flooding dominates the dynamics of this biophysical setting. Three levels of *flooding* are 7-yr events (0.13+/year) that kill or remove only herbaceous vegetation in the *early-succession* class (*SR-A*), 20-year events (0.05/year) that kill or remove shrubs and young trees in the *mid-succession closed* class (*SR-B*). The 100-year events (0.01/year) top-kill larger trees and everything else in the *late-succession closed* class (*SR-C*), however 100-year events also affects the uncharacteristic class exotic forbs:

- In the Columbia Plateau and Mojave ecoregions, the *exotic forb* class (*EF*) is reset to age zero within its class;
- In the Eastern Sierra Nevada and Great Basin ecoregions, 1% of the e*xotic forb* class (*EF*) converts to the *early-succession open* class (SR-A) and the remainder is retained within the class.

Replacement fire originates from the surrounding landscape and sweeps through the riparian corridor. A 50-year fire return interval (0.02/year) is used in every class. Replacement fire sends all reference classes back to the beginning of the *early-succession* class (*SR-A*). *Replacement fire* burns in the uncharacteristic *exotic forbs (EF)* class with vegetation staying in the same class, but returning to age zero.

Mixed fire also originates from the surrounding landscape and occurs at a mean fire return interval of 77 years (0.013/year) only in the *late-succession open* class *(SR-C),* which supports tree, shrubs, and herbaceous species*.* Mixed severity fire thins this class to the *mid-succession closed (SR-B)* class. The 77-year fire return interval is a compromise among different biophysical settings: montane sagebrush steppe, aspen, and mixed-subalpine conifers.

Another important disturbance is *exotic invasion* represented mainly by tall whitetop, knapweeds (*Centaurea* spp.), and thistles. Roadways, off-highway vehicles, and animals are usually the greatest vectors of exotic forbs. *Exotic invasion* occurs in the reference classes at a rate that varies:

- In the Eastern Sierra Nevada and Great Basin phytoregions, the *early-succession open* class (*SR-A*), *mid-succession closed* class (*SR-B*), and *late-succession open* class (*SR-C*) convert to the *exotic forb* class (*EF*) at a rate of 0.01/year (1 out of 100 pixels per year);
- In the Columbia Plateau phytoregions and montane-subalpine riparian carbonate biophysical setting, the e*arly-succession open* class (*SR-A*) and *mid-succession closed* class *(SR-B)* convert to the *exotic forb* class (*EF*) at a rate of 0.001/year; and
- In the Columbia Plateau phytoregions and montane-subalpine riparian biophysical setting, the *late-succession open* class (*SR-C)* converts to the *exotic forb* class (*EF*) at a rate of 0.0001/year.

Managed herbivory applies at a rate representing 5% of the grazable area in a phytoregion (this implementation rate represents an average stocking rate that overrides the 5%/year rate in the models). Implementation of managed herbivory varies appreciably between phytoregions:

- In the carbonate subalpine riparian biophysical setting present in the Calcareous, Clover-Delamar, and Mojave phytoregions, and the Columbia Plateau phytoregions:
    - In the *early-succession* class (*SRc-A*) and *mid-succession closed* class (*SRc-B*), *managed herbivory* causes a reversal of succession age by -1 year (Columbia Plateau, -999 years in the *early-succession* class (*SR-A*), which is nearly the same in this ephemeral class) as livestock select willows and herbaceous species.

- As vegetation height escapes the reach of livestock in the *late-succession closed* class (*SRc-C*), *managed herbivory* accelerates woody succession by one year for grazed pixels.

- In the Great Basin and Eastern Sierra Nevada phytoregions:
  - There is no *managed herbivory* in the *early-succession* class (*SR-A*) based on the assumption that creeks are rested for two years after stand replacing events; indeed, the class is only two years in duration;
  - In the *mid-succession closed* class (*SRc-B*), *managed herbivory* causes a reversal of succession age as livestock select willows and herbaceous species by -1 year.
  - As vegetation height escapes the reach of livestock in the *late-succession closed* class (*SRc-C*), *managed herbivory* accelerates woody succession by one year for grazed pixels.

Excessive herbivory affects all reference classes at the same rate of 0.001/year. The rate of 0.001/year, however, is replaced by an implementation rate equal to 0.1% of the grazable are in the phytoregion shared among all vegetation classes (i.e., all grazable classes compete for livestock). The rate of *excessive herbivory* is low because its effects are localized to water sources and pathways close to water sources; therefore, a very small proportion of the landscape is affected. Moreover, we expect less severe grazing impacts at high elevations because the season of use is short and plants relatively resilient. Again, variation exists among phytoregions:

- In the carbonate subalpine riparian biophysical setting present in the Calcareous, Clover-Delamar, and Mojave phytoregions:

  - Excessively grazed pixels in *early-succession* class (*SR-A*) and *mid-succession closed* class (*SR-B*), respectively, have their succession ages set back to zero and reversed by 5 years to indicate extensive use of vegetation.
  - As vegetation height escapes the reach of livestock in the *late-succession closed* class (*SR-C*), *managed herbivory* accelerates woody succession by 5 years for grazed pixels.

- In the Great Basin and Eastern Sierra Nevada phytoregions, there is no *excessive herbivory*, which is likely an error for the Great Basin ecoregion is. There is very little to no livestock grazing in the Eastern Sierra Nevada phytoregions at subalpine elevation.
- In Columbia Plateau phytoregion:

  - *Excessive herbivory* starts in the m*id-succession closed* class (*SR-B*) and shifts succession back 25 years in age;
  - *Excessive herbivory* shifts forward by 5 years the age of chosen pixels in the l*ate-succession open* class (*SR-C*).

Wild ungulate *grazing* thins the reference classes within the subalpine riparian carbonate biophysical setting while retaining the classes in a loop at a rate of 0.01/year (100 years). Because *wild ungulate grazing* is really elk grazing, its effects are the same as those of *managed herbivory* in the same biophysical setting.

Climate change conversion affects the *early-succession* open class (*SR-A)* and the *exotic forbs (EF)* class, but at different rates.

- In the Columbia Plateau and Great Basin ecoregions, the e*arly-succession class* (*SR-A*) and the e*xotic forb* class (*EF*), respectively, converts to the montane riparian *early-succession*

open class (*SR-A*) and *exotic forb* class (*EF*) at a rate of 0.63/year;

- In the Eastern Sierra Nevada phytoregions, e*arly-succession* class (*SR-A*) and the e*xotic forb* class (*EF*), respectively, converts to montane riparian *early-succession* class (*SR-A*) and *exotic forb* class (*EF*) at a rate of 0.65/year (1.5 years);
- In the subalpine riparian carbonate biophysical setting, the *early-succession* class (*SRc-A*) and *exotic forb* class (*EF*), respectively, converts to the montane riparian carbonate biophysical setting *early-succession* class (*SRc-A*) and the *exotic forb* class (*SRc-EF*) at a rate of 0.06/year.

Literature cited in LANDFIRE's Model Tracker:

Baker, W. L. 1988. Size-class structure of contiguous riparian woodlands along a Rocky Mountain river. Physical Geography 9(1):1-14.

Baker, W. L. 1989a. Macro- and micro-scale influences on riparian vegetation in western Colorado. Annals of the Association of American Geographers 79(1):65-78.

Baker, W. L. 1989b. Classification of the riparian vegetation of the montane and subalpine zones in western Colorado. Great Basin Naturalist 49(2):214-228.

Baker, W. L. 1990. Climatic and hydrologic effects on the regeneration of Populus angustifolia James along the Animas River, Colorado. Journal of Biogeography 17:59-73.

Crowe, E. A., and R. R. Clausnitzer. 1997. Mid-montane wetland plant associations of the Malheur, Umatilla, and Wallowa-Whitman national forests. USDA Forest Service, Pacific Northwest Region. Technical Paper R6-NR-ECOL-TP-22-97.

Kittel, G. M. 1994. Montane vegetation in relation to elevation and geomorphology along the Cache la Poudre River, Colorado. Unpublished thesis, University of Wyoming, Laramie.

Kittel, G., R. Rondeau, N. Lederer, and D. Randolph. 1994. A classification of the riparian vegetation of the White and Colorado River basins, Colorado. Final report submitted to Colorado Department of Natural Resources and the Environmental Protection Agency. Colorado Natural Heritage Program, Boulder. 166 pp.

Kittel, G., R. Rondeau, and A. McMullen. 1996. A classification of the riparian vegetation of the Lower South Platte and parts of the Upper Arkansas River basins, Colorado. Submitted to Colorado Department of Natural Resources and the Environmental Protection Agency, Region VIII. Prepared by Colorado Natural Heritage Program, Fort Collins. 243 pp.

Kittel, G., R. Rondeau, and S. Kettler. 1995. A classification of the riparian vegetation of the Gunnison River Basin, Colorado. Submitted to Colorado Department of Natural Resources and the Environmental Protection Agency. Prepared by Colorado Natural Heritage Program, Fort Collins. 114 pp.

Kittel, G., E. Van Wie, M. Damm, R. Rondeau, S. Kettler, and J. Sanderson. 1999a. A classification of the riparian plant associations of the Rio Grande and Closed Basin watersheds, Colorado. Unpublished report prepared by the Colorado Natural Heritage Program, Colorado State University, Fort Collins.

Kittel, G., E. Van Wie, M. Damm, R. Rondeau, S. Kettler, A. McMullen, and J. Sanderson. 1999b. A classification of riparian and wetland plant associations of Colorado: A user's guide to the classification project. Colorado Natural Heritage Program, Colorado State University, Fort Collins CO. 70 pp. plus appendices.

Kovalchik, B. L. 1987. Riparian zone associations - Deschutes, Ochoco, Fremont, and Winema national forests. USDA Forest Service Technical Paper 279-87. Pacific Northwest Region, Portland, OR. 171 pp.

Kovalchik, B. L. 1993. Riparian plant associations on the national forests of eastern Washington - Draft version 1. USDA Forest Service, Colville National Forest, Colville, WA. 203 pp.

Kovalchik, B. L. 2001. Classification and management of aquatic, riparian and wetland sites on the national forests of eastern Washington. Part 1: The series descriptions. 429 pp. plus appendix.

[http://www.reo.gov/col/wetland_classification/wetland_classification.pdf]
Manning, M. E., and W. G. Padgett. 1995. Riparian community type classification for Humboldt and Toiyabe national forests, Nevada and eastern California. USDA Forest Service, Intermountain Region. 306 pp.
Muldavin, E., P. Durkin, M. Bradley, M. Stuever, and P. Mehlhop. 2000. Handbook of wetland vegetation communities of New Mexico: Classification and community descriptions (volume 1). Final report to the New Mexico Environment Department and the Environmental Protection Agency prepared by the New Mexico Natural Heritage Program, University of New Mexico, Albuquerque, NM.
Nachlinger, J., K. Sochi, P. Comer, G. Kittel, and D. Dorfman. 2001. Great Basin: An ecoregion-based conservation blueprint. The Nature Conservancy, Reno, NV. 160 pp. plus appendices.
Neely, B., P. Comer, C. Moritz, M. Lammerts, R. Rondeau, C. Prague, G. Bell, H. Copeland, J. Jumke, S. Spakeman, T. Schulz, D. Theobald, and L. Valutis. 2001. Southern Rocky Mountains: An ecoregional assessment and conservation blueprint. Prepared by The Nature Conservancy with support form the U.S. Forest Service, Rocky Mountain Region, Colorado Division of Wildlife, and Bureau of Land Management.
Padgett, W. G. 1982. Ecology of riparian plant communities in southern Malheur National Forest. Unpublished thesis, Oregon State University, Corvallis. 143 pp.
Padgett, W. G., A. P. Youngblood, and A. H. Winward. 1988a. Riparian community type classification of Utah and southeastern Idaho. Research Paper R4-ECOL-89-0. USDA Forest Service, Intermountain Region, Ogden, UT.
Padgett, W. G., A. P. Youngblood, and A. H. Winward. 1988b. Riparian community type classification of Utah. USDA Forest Service, Intermountain Region Publication R4-ECOL-88-01. Ogden, UT.
Rondeau, R. 2001. Ecological system viability specifications for Southern Rocky Mountain ecoregion. First Edition. Colorado Natural Heritage Program, Colorado State University, Fort Collins, CO. 181 pp.
Szaro, R. C. 1989. Riparian forest and scrubland community types of Arizona and New Mexico. Desert Plants Special Issue 9(3-4):70-139.
Tuhy, J., P. Comer, D. Dorfman, M. Lammert, B. Neely, L. Whitham, S. Silbert, G. Bell, J. Humke, B. Baker, and B. Cholvin. 2002. An ecoregional assessment of the Colorado Plateau. The Nature Conservancy, Moab Project Office. 112 pp. plus maps and appendices.
Walford, G. M. 1996. Statewide classification of riparian and wetland dominance types and plant communities - Bighorn Basin segment. Report submitted to the Wyoming Department of Environmental Quality, Land Quality Division by the Wyoming Natural Diversity Database. 185 pp.

State-and-Transition Model (cropped; same model for the carbonate biophysical setting):

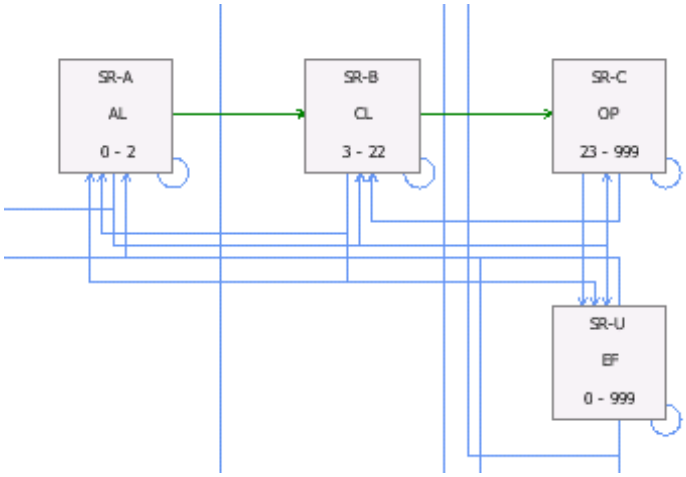

Warm Desert Riparian (WDR) 1155

Area of Application and Context:

- **Nevada Wildlife Action Plan revision**
- **Livestock grazing**
- **Fire suppression management**
- **Date created: 2011**

Vegetation:

- *A*: ***Early*:** 10-50% cover of Gooding willow and Fremont Cottonwood seedlings and shrubs; riparian and wetland graminoids may co-dominate; 0-4 yrs post-flooding
- *B*: ***Mid-closed***: 51-100% cover of willow and small trees (willow and cottonwood) <3 m; patches of graminoids and halophytic shrubs common; 5-19 yrs after flooding
- *C*: ***Mid-open***: 11-50% cover of fire resprouts of mesquite and Gooding willow; patches of graminoids frequent after fire; mesquite mature to larger trees several years after fire; 1-89 yrs after fire
- *D*: ***Late1-closed***: 51%-90% of mature Gooding willow and Fremont cottonwood; patches of graminoids in saturated soils and of halophytic shrubs on drier sediment deposits or more saline surfaces; 10-89 yrs
- *E*: ***Late2-closed***: 51-90% mesquite cover; Gooding willow and Fremont cottonwood minor component; understory often dominated by graminoids and forbs; >90 yrs
- *U-DE:* ***Desertified***: incised river bank caused by human disturbance; 10-90% native halophytic shrub or riparian tree cover; graminoid patches may be present
- *U*-EF: ***Exotic Forb:*** >5% exotic forb species regardless of native cover; river bank not incised
- *U-DET:* ***Desertified-Exotic-Tree***: >5% exotic tree species (tamarisk or Russian olive) regardless of native cover; river bank incised
- *U-DEF:* ***Desertified-Exotic-Forb***: >5% exotic forb species regardless of native cover; river bank incised
- *U-TEX:* ***Tree- Exotic-Species*:** 51%-90% of young or mature Gooding willow and Fremont cottonwood; >5% cover of exotic annual grass and forb species; patches of graminoids in saturated soils and of halophytic shrubs on drier sediment deposits or more saline surfaces
- *U-ET:* ***Exotic-Tree***: >5% exotic tree species (tamarisk or Russian olive) regardless of native cover; river bank not incised

Reference Condition:

Natural Range of Variability:

	Clover, Mojave, Tonopah
*A-**Early**:*	9%
*B-**Mid-closed**:*	16%
*C-**Mid-open**:*	16%
*D-**Late1-closed**:*	35%

*E-**Late2-closed**:*	24%
U:	0%

Succession:

Succession follows the 4-box pathway with one lateral pathway. The succession pathway is determined mostly by flooding. Vegetation is heterogeneous vegetation starting with young Goodding's willow and Fremont cottonwood, and graminoids (*WDR-A*) and finishing with mature mesquite, Goodding's willow, and Fremont cottonwood (*WDR-E*). When any of the late-closed classes (*WDR-D* and *WDR-E*) burn, they transition to the *mid-succession open* class (*WDR-C*) class dominated by resprouting mesquite, which succeeds to the *late2-succession closed* class (*WDR-E*) class. Therefore, fire has a key role in this alternate succession pathway. Succession is entirely deterministic with transitions occurring at the following ages:

- *Early-succession* to *mid-succession closed*: 4 years
- *Mid-succession closed* to *late1-succession closed*: 19 years
- *Late1-succession closed* to *late2-succession closed*: 89 years
- *Mid-succession open* to *late2-succession closed*: 89 years

Natural Disturbances:

Flooding dominates the dynamics of the warm desert riparian system. Four levels of *flooding* are:

- 7-yr events (0.13/year) that kill or remove only herbaceous vegetation in the *early-succession* class (*WDR-A*);
- 20-year events (0.05/year) that kill or removesshrubs and young trees in the *mid-succession closed* and *open* classes (respectively, *WDR-B* and *WDR-C*);
- 100-year events (0.01/year) that top-kill larger trees and everything else in the *late-succession closed* classes (*WDR-D* and *WDR-E*); however, the 100-year events in the mesquite-dominated *late2-succession closed* class (*WDR-E*) cause a transition to the *mid-succession open* class (WDR-C), also dominated by well-rooted mesquite resprouts; and
- 500-year events (0.002/year) that send the *late2-succession closed* class (*WDR-E)* back to the *early-succession* class (WDR-A). (In the model, we use the 100-year flooding name to represent the 500-year flood event.)

One-hundredth-year flooding events also transform uncharacteristic classes through the reworking of sediments:

- In the uncharacteristic *exotic-forb* class (*EF*), 100-year flooding acts as a self-loop and 100% of the selected pixels stay in their class but reset to age zero. This assumes that the root system and seed bank of exotic forb species is so extensive that even flooding does not remove propagules;
- In the *desertified (DE), exotic trees (ET), desertified exotic forbs (DEF)*, *desertified exotic trees (DET)* classes, 100-year flooding acts as a self-loop (class stays the same) in 99% of cases with

the age of the class being reset to the age at the beginning of the class;

- The remaining 1% of the originating classes convert to different classes because of deposition of flood sediment:

  - The *desertified* class (*DE*) and *exotic tree* class (*ET*) transitions to the *early-succession open* (*WDR-A)* class through reworking of flood sediments and debris; and
  - In the *desertified exotic forbs* class *(DEF)* and *desertified exotic trees* class *(DET),* respectively, convert to *exotic forbs* class *(EF), and exotic tree* class *(ET)* through reworking of sediments, but not loss of exotic species, which are simply buried.

Replacement fire generally originates from the surrounding landscape, although large riparian trees can attract lighting strikes and abundant woody debris allows fire to spread. Fire is rare because the surrounding blackbrush and creosotebush-white bursage ecological systems do not carry fire, unless invaded by non-native annual grasses. Fire restarts the succession clock to age zero after sweeping through the riparian corridor. Fire is possible in both *late-succession closed* classes (*WDR-D* and *WDR-E*) and two classes with exotic trees (salt cedar: *ET* and *DET*). Fire in reference classes causes a stand replacing event and recruitment into the *mid-succession* open class (*WDR-C*). (The *mid-succession* open class [*WDR-C*] starts a mesquite and willow pathway favored by fire response, whereas the *early-succession* class (*WDR-A*) is a flood dependent pathway with willow and cottonwood.) The mean fire return interval is set at:

- About 769 years (rate of 0.0013/year) in the *late1-succession closed* class (*WDR-D*); and
- 250 years (rate of 0.004/year) in the *late2-succession closed* class (*WDR-E*) where more woody debris has accumulated.

Fire in most uncharacteristic classes often acts as a self-loop, returning all vegetation to age zero:

- The *desertified-exotic-tree* (*DET*) and *exotic-tree* (*ET*) classes have a 20-year fire return interval (rate of 0.05/year). In other words, saltcedar, knapweeds, red brome, *Erodium cicutarium* either strongly resprout after or thrive with fire.

An important disturbance is the invasion by exotic trees (*exotic-tree-invasion*) represented mainly by salt cedar. *Exotic-tree-invasion* causes a transition to the *exotic-tree* class (*ET*) on un-incised river banks and to the *desertified-exotic-tree* (*DET*) class on incised banks. Saltcedar is wind dispersed. *Exotic-tree-invasion* occurs in several classes: *early-succession* (*WDR-A*), *mid-succession closed* and *open* classes (*WDR-B and WDR-C, respectively*), *late1-succession closed* (*WDR-D*), *late2-succession closed* class (*WDR-E*), and *desertified* class (*DE*). Invasion rates vary:

- The highest rate of invasion of 0.01/year (100 years) is found in classes with exposed mineral soil or substrate: the *early-succession* class (*WDR-A*) and the first four years of *mid-succession open* class (*WDR-C*);
- As vegetation builds up, the invasion rate decreases to 0.0075/year (133 years) in the following classes: *mid-succession closed* (*WDR-B*), the *late-succession open* (*WDR-C*) from years 5 to 89, and *desertified* (*DE*) classes; and
- The lowest rate of invasion of 0.005/year (200 years) is observed in the most mature reference classes or desertified (drier) classes: *late1-succession closed* (*WDR-D*), and the *late2-succession*

closed (*WDR-E)*.

In the warm desert riparian system, *exotic-forb-invasion* is decoupled from *exotic-tree-invasion* (it is not in other riparian ecological systems). Exotic forbs are represented mainly by knapweed species and tall whitetop, but other species are possible. *Exotic-forb-invasion* causes a transition to the *exotic-forb* class (*EF*) on un-incised river banks and to the *desertified-exotic-tree* (*DEF*) class. Classes affected and rates of invasion of the *exotic-forb* class (*EF*) are identical to those of the *exotic-tree* (*ET*) class.

Managed herbivory has a return interval of one year (livestock is present every year), but the proportion of the biophysical setting impacted is based on the distance livestock is willing to travel away from water. Water is in this ecological system. The impact of grazing is modeled with area limits, because grazing permits have fixed stocking rates, season of use, and distribution. It is assumed that *managed herbivory* utilizes 5% of all grazable areas; therefore, only 5% of the area is selected for *managed herbivory* and vegetation classes in desert riparian "compete" for selection. *Managed herbivory* allows all reference classes to remain in their respective classes as a self-loop. Although the rate of *managed herbivory* is fixed, the *relative age* shift varies among classes:

- *Managed herbivory* in the *early succession* class (*WDR-A*) causes a reset of age to zero as a result of livestock completely consuming willow and cottonwood, and trampling young floodplains;
- *In the mid-succession closed* (*WDR-B*) and *late-succession open* (*WDR-C*) classes, *managed herbivory* causes a weak one-year reversal of succession to represent some consumption of riparian woody saplings, but the inability of livestock to fully consume them;
- As riparian woody species increase in height beyond the reach of livestock, *managed herbivory* accelerates woody succession in the midstory by one year;
- *Managed herbivory* has no effect on the *late2-succession closed* classes, which is too high to be affected by livestock.

Excessive herbivory is present in the same classes where *managed herbivory* is present. *Excessive herbivory* is present every year (rate of 1/year), but the proportion of the landscape affected is 0.1%. The *excessive herbivory* rate is fixed as a treatment implementation rate to simulate a fixed stocking rate. *Excessive herbivory* is caused by the movement of livestock through the same areas near or on the way to water sources. Therefore, once areas dominated by incised river banks are created, they become permanent and new areas are generally not created. These conversions will only occur if it has been more than four years since a disturbance. This disturbance causes a transition to the *desertified* class (*DE*).

Entrenchment affects all the reference classes and the uncharacteristic *exotic forbs (DEF)* and *exotic trees (DET)* classes at the same low rate of 0.0001/year (10,000 years). This disturbance, which causes bank incision, is only active if floodplain conservation actions in a selected pixel are absent for 5 consecutive years. The reference classes all convert to the *desertified (DE)* class, while *exotic forbs (EF)* and *exotic trees (DET)* classes, respectively, converts to the *desertified exotic forbs (DEF)* and the *desertified exotic trees (ET)* classes.

S*enescence* kills old riparian trees in the *late-succession closed* class (*WDR-E),* where it converts to the *mid-succession open* class *(WDR-C)* at a rate of 0.02/year (50 years).

Literature cited in LANDFIRE's Model Tracker:

Alexander, R. R, F. Ronco, Jr. 1987. Classification of the forest vegetation on the National Forests of Arizona and New Mexico. Res. Note RM-469. Fort Collins, CO: U.S. Department of Agriculture, Forest Service, Rocky Mountain Forest and Range Experiment Station. 10 p.

Anderson, H. E. 1982. Aids to Determining Fuel Models For Estimating Fire Behavior. Gen. Tech. Rep. INT-122. Ogden, UT: U.S. Department of Agriculture, Forest Service, Intermountain Forest and Range Experiment Station. 22 p.

Arno, S. F. 2000. Fire in western forest ecosystems. In: Brown, James K.; Kapler-Smith, Jane, eds. Wildland fire in ecosystems: Effects of fire on flora. Gen. Tech. Rep. RMRS-GTR-42-vol. 2. Ogden, UT: U.S. Department of Agriculture, Forest Service, Rocky Mountain Research Station: 97-120.

Baker, W. L. and D. J. Shinneman. 2004. Fire and restoration of pińon-juniper woodlands in the western United States. A review. Forest Ecology and Management 189:1-21.

Barney, M. A., and N. C. Frischknecht. 1974. Vegetation changes following fire in the Pinyon-Juniper type of West-Central Utah. Jour. Range Manage. 27:91-96

Bradley, A. F., N. V. Noste, and W. C. Fischer. 1992. Fire Ecology of Forests and Woodlands in Utah. Gen. Tech. Rep. GTR- INT-287. Ogden, UT: U.S. Department of Agriculture, Forest Service, Intermountain Research Station. 127 p.

Brown, J. K. and J. K. Smith, eds. 2000. Wildland fire in ecosystems: effects of fire on flora. Gen. Tech. Rep. RMRS-GTR-42-vol. 2. Ogden, UT: U.S. Department of Agriculture, Forest Service, Rocky Mountain Research Station. 257 p.

Despain, D.W., Mosely, J.C., 1990. Fire history and stand structure of a pinyon-juniper woodland at Walnut Canyon National Monument, Arizona. USDI National Park Service Technical Report No. 34. Cooperative National Park Resources Studies Unit, University of Arizona, Tucson AZ. 27p

Erdman, J. A. 1970. Pinyon-juniper succession after natural fires on residual soils of Mesa Verde, Colorado. Science Bulletin, Biological Series - -Volume XI, No. 2. Brigham Young University, Provo, UT. 26 p.

Everett, R. L. and , K. Ward. 1984. Early Plant Succession on Pinyon-Juniper Controlled Burns. Northwest Science 58:57-68.

Eyre, F. H., ed. 1980. Forest cover types of the United States and Canada. Washington, DC: Society of American Foresters. 148 p.

Fowler, C. S, P. Esteves, G. Goad, B. Helmer, and K. Watterson. 2003. Caring for the Trees: Restoring Timbisha Shoshone Land Management Practices in Death Valley National Park. Ecological Restoration 21: 302-306.

Goodrich, S. and B. Barber. 1999. Return Interval for Pinyon-Juniper Following Fire in the Green River Corridor, Near Dutch John, Utah. In: USDA Forest Service Proceedings RMRS-P-9.

Gruell, G. E. 1999. Historical and modern roles of fire in pinyon-juniper. In: Monsen, Stephen B.; Stevens, Richard, compilers. Proceedings: ecology and management of pinyon-juniper communities within the Interior West: Sustaining and restoring a diverse ecosystem; 1997 September 15-18; Provo, UT. Proceedings RMRS-P-9. Ogden, UT: U.S. Department of Agriculture, Forest Service, Rocky Mountain Research Station: 24-28.

Gruell, G. E., L. E. Eddleman, and R. Jaindl. 1994. Fire History of the Pinyon-Juniper Woodlands of Great Basin National Park. Technical Report NPS/PNROSU/NRTR-94/01. U.S. Department of Interior, National Park Service, Pacific Northwest Region. 27 p.

Hardy, C. C., K. M. Schmidt, J. P. Menakis, R. N. Samson. 2001. Spatial data for national fire planning and fuel management. Int. J. Wildland Fire. 10(3&4):353-372.

Hessburg, P. F., B. G. Smith, R. B. Salter, R. D. Ottmar., and E. Alvarado. 2000. Recent changes (1930s-1990s) in spatial patterns of interior northwest forests, USA. Forest Ecology and Management 136:53-83.

Kilgore, B. M. 1981. Fire in ecosystem distribution and structure: western forests and scrublands. P. 58-

89. In: H.A. Mooney et al. (Technical
Coordinators). Proceedings: Conference on Fire Regimes and Ecosystem Properties, Honolulu, 1978. Gen. Tech. Rep. WO-GTR-26.
Kuchler, A. W. 1964. Potential Natural Vegetation of the Conterminous United States. American Geographic Society Special Publication No. 36. 116 p.
Ogle, K. and V. DuMond. 1997. Historical Vegetation on National Forest Lands in the Intermountain Region. U.S. Department of Agriculture, Forest Service, Intermountain Region, Ogden, UT. 129 p.
NatureServe. 2004. International Ecological Classification Standard: Terrestrial Ecological Classifications. Terrestrial ecological systems of the Great Basin US: DRAFT legend for Landfire project. NatureServe Central Databases. Arlington, VA. Data current as of 4 November 2004.
Ott, J., E., E. D. McArthur, and S. C. Sanderson. 2001. Plant Community Dynamics of Burned and Unburned Sagebrush and Pinyon-Juniper Vegetation in West-Central Utah. In: Proceedings, USDA Forest Service RMRS-P-9. p. 177-190.
Romme, W. H., L. Floyd-Hanna, and D. Hanna. 2002. Ancient Pinyon-Juniper forests of Mesa Verde and the West: A cautionary note for forest restoration programs. In: Conference Proceedings – Fire, Fuel Treatments, and Ecological Restoration: Proper Place, Appropriate Time, Fort Collins, CO, April 2002. 19 p.
Rondeau, R. 2001. Ecological System Viability Specifications for Southern Rocky Mountain Ecoregion. Colorado Natural Heritage Program. 181p.
Schmidt, K. M., J. P. Menakis, C. C. Hardy, W. J. Hann, and D. L. Bunnell. 2002. Development of coarse-scale spatial data for wildland fire and fuel management. Gen. Tech. Rep. RMRS-GTR-87. Fort Collins, CO: U.S. Department of Agriculture, Forest Service, Rocky Mountain Research Station. 41 p. + CD.
Soule', P. T. and P. A. Knapp. 1999. Western juniper expansion on adjacent disturbed and near-relict sites. Journal of Range Management 52:525-533.
Soule', P. T. and P. A. Knapp. 2000. Juniperus occidentalis (western juniper) establishment history on two minimally disturbed research natural areas in central Oregon. Western North American Naturalist (60)1:26-33.
Stein, S. J. 1988. Fire History of the Paunsaugunt Plateau in Southern Utah. Great Basin Naturalist. 48:58-63.
Tausch, R. J., N. E. West, and A. A. Nabi. 1981. Tree Age and Dominance Patterns in Great Basin Pinyon-Juniper Woodlands. Jour. Range. Manage. 34:259-264.
Tausch, R. J. and N. E. West. 1987. Differential Establishment of Pinyon and Juniper Following Fire. The American Midland Naturalist 119(1). P. 174-184.
U.S. Department of Agriculture, Forest Service, Rocky Mountain Research Station, Fire Sciences Laboratory (2002, December). Fire Effects Information System, [Online]. Available: http://www.fs.fed.us/database/feis/ [Accessed: 11/15/04].
Ward, K. V. 1977. Two-Year Vegetation Response and Successional Trends for Spring Burns in the Pinyon-Juniper Woodland. M.S. Thesis, University of Nevada, Reno. 54 p.
Wright, H. A., L. F. Neuenschwander, and C. M. Britton. 1979. The role and use of fire in Sagebrush-Grass and Pinyon-Juniper Plant Communities. Gen. Tech. Rep. INT-GTR-58. Ogden, UT: U.S. Department of Agriculture, Forest Service, Intermountain Research Station. 48 p.
Young, J. A., and R. A. Evans. 1978. Population Dynamics after Wildfires in Sagebrush Grasslands. Journal of Range Management 31:283-289.
Young, J. A., and R. A. Evans. 1981. Demography and Fire History of a Western Juniper Stand. Journal of Range Management 34:501-505.

State and Transition Model (cropped):

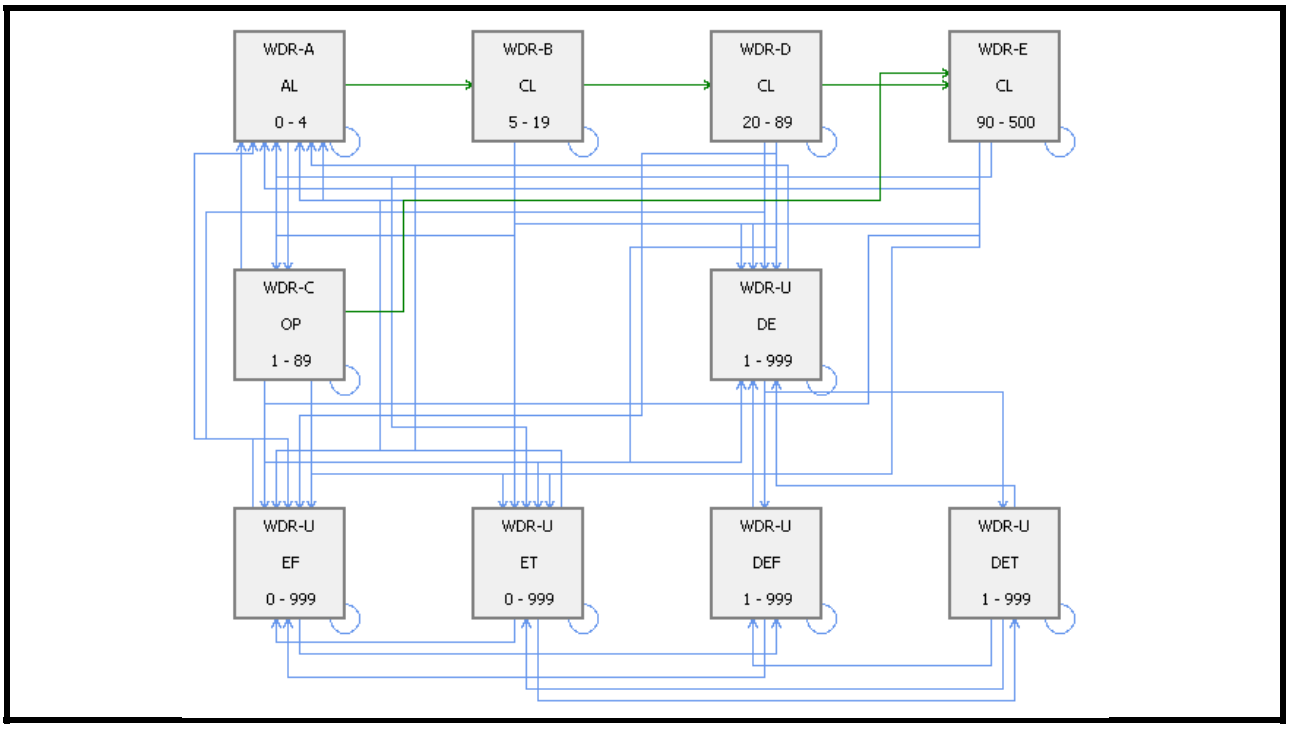
WDR-A
AL
0 - 4
WDR-B
CL
5 - 19
WDR-D
CL
20 - 89
WDR-E
CL
90 - 500
WDR-C
OP
1 - 89
WDR-U
DE
1 - 999
WDR-U
EF
0 - 999
WDR-U
ET
0 - 999
WDR-U
DEF
1 - 999
WDR-U
DET
1 - 999

Washes (WAS) 11551

Area of Application and Context:

- **Wildlife Action Plan revision**
- **No livestock grazing**
- **Fire suppression management**
- **Date created: 2011**

Vegetation:

- *A*: ***Early***: 20-50% cover may be gravel, sands, and/or flood debris; 10-19% cover of shrubs (species varies between southern and northern Nevada: desert almond, burrobrush, rabbitbrush, creosotebush, desert willows present); 5-15% cover of grasses (species varies between southern and northern Nevada); 0-5 yrs
- *B*: ***Mid-closed***: 20-50% cover of shrubs (species varies between southern and northern Nevada: desert almond, bursage, burrobrush, creosotebush, Anderson's wolfberry, rabbitbrush); 5-10% cover of grasses (species varies between southern and northern Nevada); <30% of gravel and rocks; 5-19 yrs
- *C*: ***Late-closed***: 30-50% cover of shrubs (species varies between southern and northern Nevada: bursage, burrobrush, creosotebush, Anderson's wolfberry, rabbitbrush, mesquite); Joshua tree may be present in southern Nevada; 5-10% cover of grasses (species varies between southern and northern Nevada); <10% of gravel and rocks; >20 yrs
- *U-ET:* ***Exotic-Tree (formerly EX)***: >5% cover of salt cedar; 0-50% cover of shrubs

Reference Condition:

- **Natural Range of Variability**

  *A-**Early**:* 3%
  *B-**Mid-closed**:* 11%
  *C-**Late-closed**:* 86%
  U: 0%

Succession:

Succession follows the 3-box pathway with heterogeneous vegetation starting with abundant flood material (gravel, sand, and cobble) mixed with snakeweed and herbaceous species ending with a denser cover of shrubs and small trees. The succession pathway is entirely deterministic with transitions occurring at the following ages:

- *Early-succession* to *mid-succession closed*: 4 years
- *Mid-succession closed* to *late-succession closed*: 19 years

Natural Disturbances:

Flash flooding dominates the dynamics of desert washes, which do not have perennial water. The return interval of flash floods is 133 years based on an estimate from Kyle Canyon's gage data in the Spring Mountains. All classes are affected:

- All reference classes transition back to the beginning of the *early-succession* class (*WAS-A*);
- Ninety-nine percent of the *exotic tree* class (*ET*) stays in the class, but the age returns to zero, whereas the remaining 1% transition to the *early-succession* class (*WAS-A*).

Replacement fire generally originates from the surrounding landscape and restarts the succession clock to age zero after sweeping through the desert wash. Fire is possible in all classes. Fire is rare because the surrounding blackbrush and creosotebush-white bursage ecological systems do not carry fire, unless they are invaded by non-native annual grasses. The mean fire return interval is set at 1,000 years (rate of 0.001/year) in all classes. The reference classes transition to the beginning of the *early-succession* class (*WAS-A*) with fire, whereas burned pixels of the *exotic tree* class (*ET*) stays in their class, but age is reset to zero.

Non-native annual species (*EX-invasion*) occurs at a rate of 0.001/year (1 of 1,000 pixels per year) in all un-invaded classes: *early-succession* class (*WAS-A*), *mid-succession closed* class (*WAS -B*), and *late-succession closed* class (*WAS-C*). We assume that salt cedar is the dominant invader and that invasion of dry washes is spotty, thus the low rate of 0.001/year. All classes transition to the exotic tree class (*WAS-ET*).

Literature cited in LANDFIRE's Model Tracker:

Brooks, M. L. and R. A. Minnich. In Press. Fire in the Southeastern Desert Bioregion. Chapter 16 in: Sugihara, N. G., J. W. van Wagtendonk, J. Fites-Kaufman, K. E. Shaffer, and A. E. Thode (eds.). Fire in California ecosystems. University of California Press, Berkeley.

Busch, D. E. and S. D. Smith. 1995. Mechanisms associated with decline of woody species in riparian ecosystems of the southwestern U.S. Ecological Monographs 6: 347-370.

Davis, G. A. 1977. Management Alternatives for Riparian Habitat in the Southwest; Importance, Preservation and Management of Riparian Habitat: A Symposium July 9, 1977, Tucson, Arizona, USDA Forest Service General Technical Report RM-43, p. 59-67. 19 ref.

Ellis, L. M., 1995. Bird use of Salt cedar and Cottonwood vegetation in the Middle Rio Grande Valley of New Mexico, U.S.A.. Journal of Arid Environments, Department of Biology, University of New Mexico, Albuquerque, NM, pp. 339-349.

Ellis L. M. 2001. Short-term response of woody plants to fire in a Rio Grande riparian forest, Central New Mexico, USA. Biological Conservation 97: 159-170.

Ellis, L. M., C. S. Crawford, and M. C. Molles, Jr., 1996. The middle Rio Grande Bosque: an endangered ecosystem. New Mexico Journal of Science 36.

Ellis, L. M., C. S. Crawford, and M. C. Molles, Jr., 1997. Rodent communities in native and exotic riparian vegetation in the Middle Rio Grande Valley of central New Mexico. The Southwestern Naturalist 42:13-19.

Ellis, L. M., C. S. Crawford, and M. C. Molles, Jr., 1998. Comparison of litter dynamics in native and exotic riparian vegetation along the middle Rio Grande of central New Mexico, U.S.A.. Journal of Arid Environments 38: 283-296.

Ellis, L. M., C. S. Crawford, and M. C. Molles, Jr., 2002. The Role of the Flood Pulse in Ecosystem-Level Processes in Southwestern Riparian Forests: A Case Study from the Middle Rio Grande. Pages 51-107

In: B.A. Middleton (ed.), Flood Pulsing in Wetlands: Restoring the Natural Hydrological Balance, John Wiley and Sons, Inc.
Fowler, C. S, P. Esteves, G. Goad, B. Helmer, and K. Watterson. 2003. Caring for the Trees: Restoring Timbisha Shoshone Land Management Practices in Death Valley National Park. Ecological Restoration 21: 302-306.
Manning, M. E., and W. G. Padgett. 1995. Riparian community type classification for Humboldt and Toiyabe national forests, Nevada and eastern California. USDA Forest Service, Intermountain Region. 306 pp.
McBride, J.R., Strahan, J. 1984. Establishment and survival of woody riparian species on gravel bars of an intermittent stream. American Midland Naturalist 112:235-245.
Molles, M. C. Jr., C. S. Crawford L. M. Ellis, H. M. Valett, C. N. Dahm. 1998. Managed Flooding for Riparian Ecosystem Restoration. Bioscience 48: 749-756.
Nachlinger, J. and G. A. Reese. 1996. Plant community classification of the Spring Mountains National Recreation Area, Clark and Nye Counties, Nevada. Report submitted to USDA Forest Service, Humboldt-Toiyabe National Forest.
Rea, A. M. 1983.Once a river; Bird life and habitat changes on the middle Gila. University of Arizona Press.
Richter, H. E. 1992. Development of a conceptual model for floodplain restoration in a desert riparian system. Arid Lands 32: 13-17.
Rood, S.B., C.R. Gourley, E.M. Ammon, L.G. Heki, J.R. Klotz, M.L Morrison, D. Mosley, G.G. Scoppettone, S.Swanson, and P.L. Wagner. 2003. Flows for floodplain forests: A successful riparian restoration. BioScience 53: 647-656.
Stromberg, J. 1992. Element Stewardship Abstract for Mesquite (Proposis spp.). The Nature Conservancy, Arlington, VA.

State-and-Transition Model (cropped):

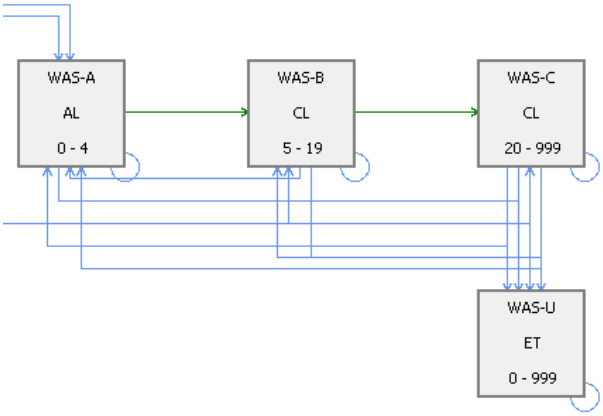

Wyoming Big Sagebrush (8-10 inch precipitation zone) 10800

Area of Application and Context:

- **Nevada Wildlife Action Plan revision**
- **Livestock grazing**
- **Fire suppression management**
- **Date created: 2011**

Vegetation classes:

- *A-**Early***: 20-40% herbaceous cover; <10% cover of rabbitbrush species and Wyoming big sagebrush; 0-19 yrs
- *B-**Mid-open***: 11-20% cover Wyoming big sagebrush; 10-40% herbaceous cover; 20-59 yrs
- *C-**Late-closed***: 20-40% cover of Wyoming big sagebrush; <20% native herbaceous cover; 60-99 yrs
- *U-ES*: ***Early-Shrub***: 20-50% cover rabbitbrush species
- *U-TA:* ***Tree-Annual-Grass***: 11-60% cover of trees 5-9m; <20% cheatgrass cover; >125 yrs
- *U-SAP*: ***Shrub-Annual-Grass-Perennial-Grass***: 10-30% Wyoming big sagebrush <0.5m, if >5% native grass cover, then >5% cover cheatgrass or if ≤5% native grass cover, then 0-20% cheatgrass cover; >10 yrs
- *U-AG:* ***Annual-Grass***: 10-40% cover of cheatgrass; <10% shrub cover

Reference Condition:

- **Natural Range of Variability**

  *A-**Early**:* 33%
  *B-**Mid-open**:* 42%
  *C-**Mid-closed**:* 25%
  U: 0%

Succession:

Succession follows the 3-box pathway with vegetation starting as predominantly herbaceous and ending with Wyoming sagebrush dominance and a viable shrub and herbaceous understory. Deterministic succession transitions occur at the following ages:

- Early to mid-succession open: 19 years
- Mid-succession open to Late-succession closed: 59 years

Natural Disturbances:

Replacement fire was the primary stochastic disturbance, albeit infrequent. *Replacement fire* restarts the succession clock to age zero within the reference condition, which was labeled the *early-succession* or *WS-A* class. The mean return interval of *replacement fire* changes with

vegetation classes: from 200 years (0.005/year) in the *early-succession* class (*WS-A*), 125 years (0.008/year) in the *mid-succession open* class *(WS-B),* and 100 years (0.01/year) in the *late-succession open* class (*WS-C*). *Replacement fire* in vegetation classes that already experienced a threshold transition also causes a threshold transition to other uncharacteristic classes. Fire in the *tree with annual grass* class (*TA*) (this class lumps tree-encroached shrublands with or without annual grasses) with a mean fire return interval of 125 years (0.008/year) causes a transition to the *annual grass* class (*AG*) 90% of times and the *early shrub* class (*ES*) for the remainder of outcomes. A 10-year fire cycle applies to the *annual grass* class (*AG*) and behaves as a self-loop. A 100-year fire cycle applies to the *early shrub (ES)* class and behaves as a self-loop. The *shrub with a mixed understory of annual and perennial grasses* class (*SAP*) becomes the *annual grass* class (*AG*) with a *replacement fire* of 25 years (0.04/year)—the shorter fire return interval is caused by the presence of annual grasses, which are fine fuels. In the *seeded* class (*SD*), crested wheatgrass and other introduced species (e.g., forage kochia) do not burn well; therefore, *replacement fire* was set at a 500-year fire return interval (0.002/year) that returns the seeding to age zero.

Drought is found in the reference *late-succession* class *(WS-C)* and causes stand replacing events (generally 10% of times) to *mid-succession open (WS-B)* or stand thinning (90% of times) where it is retained in the same class. In most cases, *drought* creates tree and shrub mortality under the assumption that prolonged and decreased soil moisture weakens plants that might ultimately be killed by insects or disease. Therefore, we do not double-count mortality. A *drought* return interval rate of every 179 years (a rate of 0.0056/year) is used based on the frequency of severe drought intervals estimated by Biondi *et al*. (2007) from 2,300 years of western juniper (*Juniperus occidentalis)* tree ring data from the Walker River drainage of eastern California and western Nevada. Although we recognize that droughts may be more common than every 179 years, severe droughts, which are >7-year drought events with consecutive far-below average soil moisture (narrow tree rings), kill naturally drought resistant shrubs and trees.

Drought affects two uncharacteristic classes. Drought thins the *trees with annual grass* (*TA*) to three classes: 9% to the *annual grassland* class (*AG*), 1% to *early shrub* class at a reduced rate of 0.01/year (100 years) (*ES*), and 90% as a self-loop to the beginning of the class. The *shrubland with mixed annual and perennial grasses* class (*SAP*) follows the same pattern except that 10% converts to *annual grass (AG),* and the remaining 90% is retained within the class.

Very wet years cause soils to become water-logged for long periods, roots of sagebrush to rot, and root-boring insects to attacks weakened roots. During a *very-wet-year,* all of the reference classes will be reset to age zero (*WS-A)* at a rate of 0.01/year (100 years), while the uncharacteristic *shrubs mixed with annual grass* class *(SAP)* transitions to the *annual grass* class *(AG)* at the same rate.

Annual grass invasion (*AG-invasion*) is set at a moderate rate of 0.005/year (200 years). A base rate of 0.001/year was estimated from data of northwest Utah collected by the Utah Division of Wildlife Resources in black sagebrush semi-desert. Black sagebrush semi-desert is usually considered more resistant to cheatgrass invasion than Wyoming big sagebrush semi-desert or other big sagebrush dominated biophysical settings. The invasion of the *early-succession* class *(WS-A)* causes a transition to the *shrubs with mixed annual and perennial grass* class *(SAP)* from the ages of 10 to 24 years at a rate of 0.001/year (there is no invasion prior to 10 years of age

because of the assumption that high perennial grass cover resists cheatgrass invasion). The *mid-succession* open *and late-succession* closed classes (*WS-B* and *C)* convert to the *shrubs with mixed annual and perennial grass* class *(SAP).* The *seeded* class transitions to the *annual grass* (AG) class from ages 0-9, and then to the *shrubs with mixed annual and perennial grass* class (*SAP*) from ages 10-300.

Managed herbivory has a return interval of one year (livestock is present every year) but different impact areas based on the distance livestock is willing to travel away from water. The impact of grazing is modeled like treatments with fixed area implementation rates, because grazing permits have fixed stocking rates, season of use, and distribution. It is assumed that *managed herbivory* utilizes 5% of all grazable areas; therefore, only 5% of the area is selected for *managed herbivory* and vegetation classes in Wyoming sagebrush "compete" for selection. *Managed herbivory* allows all reference and uncharacteristic classes to remain in their respective classes as a self-loop, but relative age is advanced by an extra year for selected pixels in all reference classes and the *shrubs with mixed annual and perennial grass* class (*SAP*).

Excessive herbivory affects the same classes as *managed herbivory* at a rate of 0.001/year. The rate of 0.001/year, however, is replaced by an implementation rate equal to 0.1% of the grazable are in the phytoregion shared among all vegetation classes (i.e., all grazable classes compete for livestock). The rate of *excessive herbivory* is low because its effects are localized to water sources and pathways close to water sources; therefore, a very small proportion of the landscape is affected. *Excessive herbivory* causes the *early-succession (WS-A)* and *mid-succession open* (*WS-B)* classes to transition to the *early shrub* class (*ES*). The fate of the *late-succession closed* class (*WS-C*) is different with 10% of the selected pixels transitioning to the *shrubs with mixed annual and perennial grass* class (*SAP)* and the remaining 90% of the pixels being retained in the same class, but aged by 5 years.

The presence of any pinyon and, mostly, juniper is considered uncharacteristic, especially in the harsh 8-10 inch precipitation zone. For trees to establish at this inhospitable elevation, fire must be excluded for a very long period of time. *Tree encroachment* only occurs in the *late-succession closed* class *(WS-C)* and *shrubs with mixed annual and perennial grass* class *(SAP),* where they all transition to the *trees with annual grass* class *(TA)* at a rate of 0.005/year (200 years).

Alternate succession (*natural recovery* in all other models) only applies to the uncharacteristic seeded class *(SD).* At ages 40-59 years, the *seeded (SD)* class transitions back to the *mid-succession open* class *(WS-B)* at a rate of 0.05/year and to the *late-succession closed* class *(WS-C)* from age 60 to 300 years class at an increased rate of 0.1/year (10 years).

The *climate change conversion (CC-conversion)* affects all the reference classes and the uncharacteristic *annual grass (AG), early shrub (ES), shrubs with mixed annual and perennial grass (SAP),* and the *seeded (SD)* classes at a rate of 0.0053/year (189 years).

- The *early-succession open* class (*WS-A*) converts to the mixed salt desert *early-succession open* class *(MSD-A);*
- *The mid-succession open* class (*WS-B*) converts to the mixed salt desert *mid-succession open* class *(MSD-B);*
- The *late-succession closed* class (*WS-C*) converts to the mixed salt desert *mid-*

succession open class *(MSD-B);*

- The *annual grass* class (*AG*) converts to the mixed salt desert *annual grass* class (*MSD-AG*);
- The *early shrub* class (*ES*) converts to the mixed salt desert *shrubs with mixed annual and perennial grass* class *(MSD-SAP);*
- The *shrubs with mixed annual and perennial grass* class (*SAP*) converts to the mixed salt desert *shrubs with mixed annual and perennial grass* class (*MSD-SAP*);
- The *seeded* class (*SD*) converts to the mixed salt desert *seeded* class *(MSD-SD).*

Literature from LANDFIRE Model Tracker:

Anderson, J. E. and R. S. Inouye 2001. Landscape-scale changes in plant species abundance and biodiversity of a sagebrush steppe over 45 years. Ecological Monographs 71:531-556.

Biondi, F., Kozubowski. T.J., Panorska, A.K., and L. Saito. 2007. A new stochastic model of episode peak and duration for eco-hydro-climatic applications. Ecological Modelling 211:383-395.

Brown, David E., ed. 1982. Biotic communities of the American Southwest--United States and Mexico. Desert Plants: Special Issue. 4(1-4): 342 p.

Burkhardt, W. J. and E. W. Tisdale. 1969. Nature and successional status of western juniper vegetation in Idaho. Journal of Range Management 22(4):264-270.

Burkhardt, W. J. and E. W. Tisdale. 1976. Causes of juniper invasion in southwestern Idaho. Ecology 57: 472-484.

Crawford, J. A., R. A. Olson, N. E. West, J. C. Mosley, M. A. Schroeder, T. D. Whitson, R. F. Miller, M. G. Gregg, and C. S. Boyd. 2004. Ecology and management of sage-grouse and sage-grouse habitat. Journal of Range Management 57:2-19.

Hironaka, M., M. A. Fosberg, and A. H. Winward. 1983. Sagebrush-Grass Habitat Types of Southern Idaho. University of Idaho Forest, Wildlife and Range Experiment Station, Bulletin Number 35. Moscow, ID. 44p.

Houston, D. B. 1973. Wildfires in northern Yellowstone National Park. Ecology 54(5): 1111-1117.

Johnson, K. 2000. Artemisia tridentata ssp. vaseyana. In: Fire Effects Information System [Online], U.S. Dept. of Agriculture, Forest Service, Rocky Mountain Research Station, Fire Sciences Laboratory (Producer). Available: http://www.fs.fed.us/database/feis/ [2004, September 17].

Mozingo, H. N. 1987. Shrubs of the Great Basin: a natural history. University of Nevada, Reno, Nevada.

Miller, Richard E.; Fowler, Norma L. 1994. Life history variation and local adaptation within two populations of Bouteloua rigidiseta (Texas grama). Journal of Ecology. 82: 855-864.

Miller, R. F. and J. A. Rose. 1995. Historic expansion of Juniperus occidentalis (western juniper) in southeastern Oregon. The Great Basin Naturalist 55(1):37-45.

Miller, R. F. and J. A. Rose. 1999. Fire history and western juniper encroachment in sagebrush steppe. Journal of Range Management 52. Pp. 550-559.

Miller, R. F., T. J. Svejcar, and J. A. Rose. 2000. Impacts of western juniper on plant community composition and structure. Journal of Range Management 53(6):574-585.

Miller, R. F. and R. J. Tausch. 2001. The role of fire in juniper and pinyon woodlands: a descriptive analysis. Proceedings: The First National Congress on Fire, Ecology, Prevention, and Management. San Diego, CA, Nov. 27- Dec. 1, 2000. Tall Timbers Research Station, Tallahassee, FL. Miscellaneous Publication 11, p:15-30.

Mueggler, W. F. and W. L. Stewart. 1980. Grassland and shrubland habitat types of Western Montana. USDA Forest Service GTR INT-66.

Pedersen, E. K., J. W. Connelly, J. R. Hendrickson, and W. E. Grant. 2003. Effect of sheep grazing and fire on sage grouse populations in southeastern Idaho. Ecological Modeling 165:23-47.

Simon, S. A. 1990. Fire effects from prescribed underburning in central Oregon ponderosa pine plant communities: first and second growing season after burning. Pp. 93-109. In Fire in Pacific Northwest Ecosystems. Thomas E. Bedell, editor. Department of Rangeland Resources, Oregon State University, Covallis, OR. 145p.

Tart, D. L. 1996. Big sagebrush plant associations of the Pinedale Ranger district. Pinedale, WY: USDA For. Serv. Bridger-Teton National Forest. Jackson, WY. 97 p.

Welch, B. L, C. Criddle. 2003. Countering Misinformation Concerning Big Sagebrush. Research Paper RMRS-RP-40. Ogden, UT: U.S. Department of Agriculture, Forest Service, Rocky Mountain Research Station. 28 p.

Winward, A. H. 1991. A renewed commitment to management in sagebrush grasslands. In: Management in the Sagebrush Steppes. Oregon State University Agricultural Experiment Station Special Report 880. Corvallis OR. Pp.2-7.

Winward, A. H. 2004. Sagebrush of Colorado; taxonomy, distribution, ecology, & management. Colorado Division of Wildlife, Department of Natural Resources, Denver, CO.
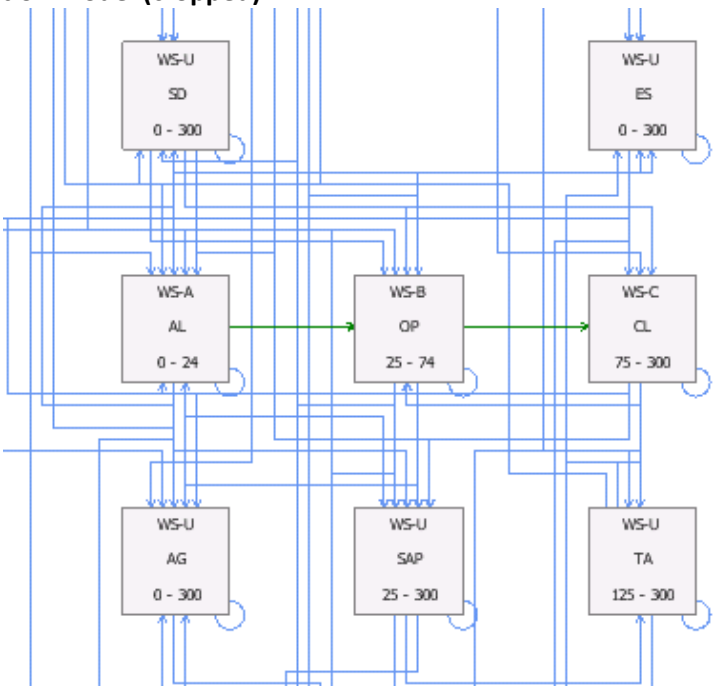
State-and-Transition Model (cropped):