Washoe County Development Code

Washoe County
Community Services Department
Planning and Development
1001 E. Ninth St., Bldg. A
Post Office Box 11130
Reno, NV 89520-0027
Tel: 775.328.6100
Fax: 775.328.6133

Washoe County Development Code

The Washoe County Development Code is contained within the Washoe County Code as Chapter 110. The Development Code, together with related information and applications necessary for development, are available from the Washoe County Community Services Department, Planning and Development Division. This document is available for $30.00. For information on other chapters of the Washoe County Code, please contact the Office of the County Clerk.

The Washoe County Development Code can also be found on our department's home page on the Internet at www.washoecounty.us/comdev/. Other chapters of the Washoe County Code can be found on the County Clerk's home page at www.washoecounty.us/clerks/.

EIGHTY-EIGHTH PRINTING, MAY 2015

CONTENTS

County Commission Adoption Information ..... Page x

Planning Commission Adoption Information ..... Page xxxv

DIVISION ONE - INTRODUCTION AND ORGANIZATION

Introduction and Organization: Title and Contents ..... Article 100

State and Regional Regulatory System ..... Article 102

County Growth Management System ..... Article 104

Master Plan Categories and Regulatory Zones ..... Article 106

DIVISION TWO - AREA PLAN REGULATIONS

Area Plan Regulations: Title and Contents ..... Article 200

Area Plan General Regulations ..... Article 202

Forest Area ..... Article 204

High Desert Area ..... Article 206

North Valleys Area ..... Article 208

South Valleys Area ..... Article 210

Southeast Truckee Meadows Area ..... Article 212

Southwest Truckee Meadows Area ..... Article 214

Spanish Springs Area ..... Article 216

Sun Valley Area ..... Article 218

Tahoe Area ..... Article 220

Truckee Canyon Area ..... Article 222

Verdi Area ..... Article 224

Warm Springs Area ..... Article 226

DIVISION THREE - REGULATION OF USES

Regulation of Uses: Title and Contents ..... Article 300

Allowed Uses ..... Article 302

Use Classification System ..... Article 304

Accessory Uses and Structures ..... Article 306

Home Occupations ..... Article 308

Temporary Uses and Structures ..... Article 310

Fabricated Housing ..... Article 312

Manufactured Home Parks ..... Article 314

Recreational Vehicle Parks ..... Article 316

Vacation Time Share Units ..... Article 318
Bed and Breakfast Establishments ..... Article 320
Group Care Facilities ..... Article 322
Communication Facilities ..... Article 324
Wind Machines ..... Article 326
Geothermal Resources ..... Article 328
Domestic Pets and Livestock ..... Article 330
Aggregate Facilities ..... Article 332
Mining ..... Article 334
Affordable Housing Incentives (Reserved for Future Ordinance) ..... Article 336
Child Daycare Development Incentives (Reserved for Future Ordinance) Article 338
Industrial Performance Standards ..... Article 340

DIVISION FOUR - DEVELOPMENT STANDARDS

Development Standards: Title and Contents ..... Article 400
Density/Intensity Standards ..... Article 402
Lot Standards ..... Article 404
Building Placement Standards ..... Article 406
Common Open Space Development ..... Article 408
Parking and Loading ..... Article 410
Landscaping ..... Article 412
Noise and Lighting Standards ..... Article 414
Flood Hazards ..... Article 416
Significant Hydrologic Resources ..... Article 418
Storm Drainage Standards ..... Article 420
Water and Sewer Resource Requirements ..... Article 422
Hillside Development ..... Article 424
Scenic Areas (Reserved for Future Ordinance) ..... Article 426
Alternative Energy Development Incentives (Reserved for Future Ordinance) ..... Article 428
River Corridor Development (Reserved for Future Ordinance) ..... Article 430
Open Space Standards ..... Article 432
Regional Development Standards within Cooperative Planning Areas and all of Washoe County ..... Article 434
Street Design Standards ..... Article 436
Grading Standards ..... Article 438
Public School Facilities Design Standards ..... Article 440

DIVISION FIVE - SIGNS

Signs: Title and Contents ..... Article 500

Billboard Regulations ..... Article 502

Sign Regulations ..... Article 504

DIVISION SIX - SUBDIVISION REGULATIONS

Subdivision Regulations: Title and Contents ..... Article 600

General Subdivision Provisions ..... Article 602

Design Requirements ..... Article 604

Parcel Maps ..... Article 606

Tentative Subdivision Maps ..... Article 608

Final Subdivision Maps ..... Article 610

Division of Land into Large Parcels ..... Article 612

Reversion to Acreage ..... Article 614

Amendments of Map ..... Article 616

Boundary Line Adjustment ..... Article 618

DIVISION SEVEN - INFRASTRUCTURE AVAILABILITY AND FINANCING

Infrastructure Availability and Financing: Title and Contents ..... Article 700

Adequate Public Facilities Management System ..... Article 702

Adequate Public Facilities: Sanitary Sewer ..... Article 704

Impact Fees ..... Article 706

DIVISION EIGHT - PROCEDURES

Procedures: Title and Contents ..... Article 800

Variances ..... Article 804

Vacations and Abandonments of Easements or Streets ..... Article 806

Administrative Permits ..... Article 808

Special Use Permits ..... Article 810

Projects of Regional Significance ..... Article 812

Development Agreements ..... Article 814

Amendment of Development Code ..... Article 818

Amendment of Master Plan ..... Article 820

Amendment of Regulatory Zone ..... Article 821

Provisions for Amendments to Local Master Plans and Zone Changes in Areas Subject to Cooperative Planning Under the Regional Plan Settlement Agreement ..... Article 822

DIVISION NINE - GENERAL PROVISIONS

General Provisions: Title and Contents ..... Article 900

Definitions ..... Article 902

Nonconformance ..... Article 904
Fees ..... Article 906
Issuance of Permits and Licenses ..... Article 908
Enforcement ..... Article 910
Establishment of Commissions, Boards and Hearing Examiners ..... Article 912
Establishment of Department ..... Article 914
Establishment of Committees ..... Article 916
Adoption of Development Code ..... Article 918
Definitions for Floodplain Management ..... Article 920

INDEX

INTERPRETATIONS

LIST OF TABLES

Table 110.106.05.1: Table of Master Plan Categories and Allowed Regulatory Zones ..... Article 106
Table 110.106.30.1: Table of Comparable Regulatory Zones and Pre-1993 Zoning Ordinance Districts ..... Article 106
Table 110.302.05.1: Table of Uses (Residential Use Types) ..... Article 302
Table 110.302.05.2: Table of Uses (Civic Use Types) ..... Article 302
Table 110.302.05.3: Table of Uses (Commercial Use Types) ..... Article 302
Table 110.302.05.4: Table of Uses (Industrial Use Types) ..... Article 302
Table 110.302.05.5: Table of Uses (Agricultural Use Types) ..... Article 302
Table 110.324.50.1: Antenna Placement Standards ..... Article 324
Table 110.324.55.1: Significant Gap Antenna Pole Height ..... Article 324
Table 110.406.05.1: Standards ..... Article 406
Table 110.410.10.1: Off-Street Parking Space Requirements (Residential Use Types) ..... Article 410
Table 110.410.10.2: Off-Street Parking Space Requirements (Civic Use Types) ..... Article 410
Table 110.410.10.3: Off-Street Parking Space Requirements (Commercial Use Types) ..... Article 410
Table 110.410.10.4: Off-Street Parking Space Requirements (Industrial Use Types) ..... Article 410
Table 110.410.10.5: Off-Street Parking Space Requirements (Agricultural Use Types) ..... Article 410
Table 110.410.15.1: Handicapped Accessible Spaces ..... Article 410
Table 110.410.25.1: Parking Dimensions ..... Article 410
Table 110.436.25.1: Roadway Sections - A, General Applications: Arterial Highways ..... Article 436

Table 110.436.25.2: Roadway Sections - B, General Applications: Streets Serving Lot Sizes Less Than 0.5 Acres ..... Article 436

Table 110.436.25.3: Roadway Sections - C, General Applications: Streets Serving Lot Sizes 0.5 - 1.5 Acres ..... Article 436

Table 110.436.25.4: Roadway Sections - D, General Applications: Streets Serving Lot Sizes Greater Than 1.5 Acres ..... Article 436

Table 110.436.25.5: Sidewalk Requirements ..... Article 436

Table 110.436.45.1: AASHTO Minimum Design Radius Criteria ..... Article 436

Table 110.438.10.1: Permits Required ..... Article 438

LIST OF FIGURES

Figure 110.212.10.1: Typical Setback at Existing Residence ..... Article 212

Figure 110.410.15.1: Motorcycle Parking Dimensions ..... Article 410

Figure 110.410.15.2: Bicycle Parking Dimensions ..... Article 410

Figure 110.410.15.3: Handicapped Parking Dimensions ..... Article 410

Figure 110.410.15.4: International Symbol of Accessibility ..... Article 410

Figure 110.410.15.5: Accessible Routes ..... Article 410

Figure 110.410.25.1: Parking Lot Layout ..... Article 410

Figure 110.412.25.1: Total Developed Land Area ..... Article 412

Figure 110.412.30.1: Intersection Visibility ..... Article 412

Figure 110.412.40.1: Landscaping and Screening for Civic, Commercial, Industrial and Agricultural Use Types ..... Article 412

Figure 110.412.50.1: Required Trees within Parking and Loading Areas ..... Article 412

Figure 110.412.50.2: Landscaping and Screening for Parking and Loading Areas ..... Article 412

Figure 110.412.55.1: Placement and Measurement Techniques for Screening Material ..... Article 412

Figure 110.416.57.1: Exempted Parcels in Critical Flood Zone 1 ..... Article 416

Figure 110.416.57.2: Exempted Parcels in Critical Flood Zone 1 ..... Article 416

Figure 110.416.57.3: Exempted Parcels in Critical Flood Zone 1 ..... Article 416

Figure 110.424.30.1: Building Location Standards ..... Article 424

Figure 110.424.30.2: Example of Split Pad and Stepped Foundation Design ..... Article 424

Figure 110.424.30.3: Slope Ownership ..... Article 424

Figure 110.424.30.4: Building Locations Standards ..... Article 424

Figure 110.434.25.1: Parcel Size Matching ..... Article 434

Figure 110.434.25.2: Buffering ..... Article 434

Figure 110.438.25.BW: Bench Width ..... Article 438

Figure 110.438.25.RWH: Retaining Wall Height ..... Article 438

Figure 110.438.25.TW: Terrace Width ..... Article 438
Figure 110.438.45.1: Grading ..... Article 438
Figure 110.438.45.2: Slope Intersection ..... Article 438
Figure 110.438.45.3: Slope Intersection ..... Article 438
Figure 110.438.60.TOCS: Top of Cut Slope ..... Article 438
Figure 110.438.60.TOFS: Toe of Fill Slope ..... Article 438
Figure 110.902.15.BH1: Determination of Building Height in Feet ..... Article 902
Figure 110.902.15.LW1: Distance Between Side Lot Lines ..... Article 902
Figure 110.902.15.LW2: Distance Between Midpoints ..... Article 902
Figure 110.902.15.LW3: Area/Average Width ..... Article 902

LIST OF MAPS

Washoe County Planning Areas ..... Article 202
Map 110.210.05.1: South Valleys Area Plan and Hydrobasins ..... Article 210
Map 110.212.10.1: Hidden Valley Community Area Modifiers Location Map ..... Article 212
Map 110.222.15.1: Wadsworth Commercial Area Modifier Location Map ..... Article 222
Map 110.418.05.1: Significant Hydrologic Resources ..... Article 418
Map 110.706.10.1: Southeast Truckee Meadows Specific Plan Impact Fee Service Area ..... Article 706
Map 110.706.10.2: Southeast Truckee Meadows Specific Plan Impact Fee Detention Basins ..... Article 706

LIST OF INTERPRETATIONS

Interpretation 93-4: Distinction of Nonconforming and Illegal Use Types, and Ability to Bring into Conformance ..... Interpretations
Interpretation 94-1: Prohibition of Manufactured or Mobile Homes Used for Non-Residential Accessory Uses ..... Interpretations
Interpretation 94-4: Adjustment of Boundaries for General Rural (GR) Regulatory Zones on Adopted Area Plan Maps ..... Interpretations
Interpretation 94-6: Visibility of Storage of Inoperable Vehicles ..... Interpretations
Interpretation 94-7: Residential Densities in General Rural (GR) Regulatory Zones ..... Interpretations
Interpretation 94-8: Replacement of Nonconforming Manufactured or Mobile Homes ..... Interpretations
Interpretation 96-1: Length of Stay of Recreational Vehicles in Parks ..... Interpretations
Interpretation 96-2: Conformance of Final Subdivision Map with Approved Tentative Subdivision Map ..... Interpretations
Interpretation 96-3: Use of Transition Process after Adoption of Specific Plans and Community Plans ..... Interpretations

Interpretation 96-4: Location of Detached Accessory Structures and Garages .... Interpretations

Interpretation 96-6: Definition of Utility Service ..... Interpretations

Interpretation 96-7: Issuance of Special Use Permits ..... Interpretations

Interpretation 99-1: Applicability of Height Limits to Retaining Walls ..... Interpretations

Interpretation 03-2: Division of GR Parcels when a Significant Hydrologic Resource Exists ..... Interpretations

Interpretation 03-3: Application of RV Park Standards to all Commercial Campground Facilities ..... Interpretations

Interpretation 04-1: Application of Parking and Landscaping Standards to Existing Commercial Development ..... Interpretations

Interpretation 04-2: Boundary Line Adjustments in the General Rural Regulatory Zone ..... Interpretations

Interpretation 04-3: Construction of Fences on Internal Lots ..... Interpretations

Interpretation 04-4: Requirements to Establish Agricultural Buildings as a Main Use and Limitations on Structures ..... Interpretations

Interpretation 06-1: Determining Whether Fractional Lot Remainders May Be Rounded Up to Next Whole Number ..... Interpretations

Interpretation 09-1: Construction of Fences Adjacent to Emergency Access Easements and Cul-de-sacs ..... Interpretations

Interpretation 11-1: Farrier Training Facility, Use Classification ..... Interpretations

Interpretation 11-3: Classification of Temporary Outdoor Entertainment Uses ..... Interpretations

Interpretation 12-1: Accessory Structures in General Rural, Lot Coverage and Size Limits ..... Interpretations

Interpretation 13-1: Extension of Master Plan Classifications and Regulatory Zones into Public Rights-of-Way ..... Interpretations

Interpretation 13-2: Interim Zoning for Properties Rolled Back from a City's SOI ..... Interpretations

Interpretation 14-1: Driveways to a Permitted Residence Located in a Sensitive Stream Zone Buffer Area ..... Interpretations

Interpretation 14-2: Periodic Review of Conditions for Aggregate Facilities ..... Interpretations

The following is a summary of the Washoe County Commission original adoption and revisions to the Washoe County Development Code:

May 8, 2015 Revisions: (DCA14-010) BILL NO. 1736, ORDINANCE NO. 1555. An ordinance amending the Washoe County Code at Chapter 110 (Development Code), to delete Section 110.806.25, *Hearing of Appeal by Board*, and Section 110.806.30, *Notice of Board Hearing*, of Division Eight, *Procedures*; to add a new Section at 110.912.20 of Division Nine, *General Provisions*, regarding appeals to the Board of County Commissioners of decisions by the Board of Adjustment, the Planning Commission, and Hearing Examiners; to amend various sections throughout the Development Code to adopt the new appeal provisions, including Section 110.606.55, *Appeals of Parcel Map Decisions*, and Section 110.608.15, *Appeals of Decisions Regarding Subdivision Map*s, of Division Six, *Subdivision Regulations*; and, Section 110.804.40, *Appeals of Decisions Regarding Variances*, Section 110.806.15, *Review Procedures of Planning Commission Regarding Vacations and Abandonments of Easements or Streets*, Section 110.806.35, *Action by Board Regarding Vacations and Abandonments of Easements or Streets*, Section 110.808.45, *Appeals of Decisions Regarding Administrative Permits*, Section 110.810.50, *Appeals of Decisions Regarding Special Use Permits*, Section 110.818.25, *Appeals of a Denial Regarding Development Code Amendments*, and Section 110.818.30, *Action by Board Regarding Development Code Amendments*, of Division Eight, *Procedures*; and, Section 110.912.10, *Washoe County Board of Adjustment*, to add a new subsection (j) to provide general rules regarding appeals of administrative decisions to the Board of Adjustment and other matters relating to the new appeal provisions and Board membership that is no longer applicable; Section 110.914.05, *Washoe County Department of Community Development*, at subsection (f) to provide for appeals of a decision of the Director; and, Section 110.914.00, *Purpose*, and Section 110.914.05, *Washoe County Department of Community Development,* to correct the terminology of the Planning and Development Division with the establishment of the Community Services Department of Division Nine, *General Provisions*. Recommendations include other matters properly relating thereto. Proposed April 14, 2015. Passed April 28, 2015. Effective: May 8, 2015.

April 14, 2015 Revisions: (DCA14-007) BILL NO. 1735, ORDANCE NO. 1554. An ordinance amending the Washoe County Code at Chapter 110 (Development Code) at Article 821, *Amendment of Regulatory Zone*, to add a new Section 110.821.02, *Definitions*; to amend Section 110.821.05, *Requirements for Application*, to correct references to the Director and Division and to add a provision for pre-application meetings; Section 110.821.10, *Supplemental Guidelines, Standards and Criteria*, to correct references to the Director; Section 110.821.15, *Review Procedures*, to clarify notice for the public hearing and procedures for concurrent application processing, to provide for adoption, denial and no action on the amendment by the Commission, and to remove findings for a denial; Section 110.821.20, *Notice*, to reference NRS for noticing and to add provisions for notice to GIDs and military installations; Section 110.821.25, *Appeal of Denial*, and Section 110.821.30, *Action by Board of County Commissioners on Appeal*, to amend procedures for Board action on amendments to be consistent with other Development Code provisions; Section 110.821.35, *Written Record*, to provide provisions for Board findings when the Commission makes no findings; Section 110.821.45, *Modification of Regulatory Zone Amendment*, and Section 110.821.50, *Moratorium*, for minor grammar changes; and, Section 110.821.60, *Minor Amendment of a Regulatory Zone map*, to modify procedures for Board Action on minor amendments to be consistent with other Development Code provisions and to define the content of the Board's adopting resolution. Recommendations include other matters properly relating thereto. Proposed March 24, 2015. Passed April 14, 2015. Effective April 24, 2015.

April 14, 2015 Revisions: (DCA14-006) BILL NO. 1734, ORDANCE NO. 1553. An ordinance amending Washoe County Code Chapter 110 (Development Code) at Article 820, *Amendment of Master Plan*, to clarify Planning Commission procedures for adopting, denying or not taking action on a proposed master plan amendment; to change findings of fact required when the Planning

Commission denies a master plan amendment; to establish the procedures, change voting requirements, and clarify possible actions when a decision of the Planning Commission is appealed to the Board of County Commissioners; to clarify procedures and standards for the Board of County Commissioners when adopting, modifying or denying master plan amendments; to provide for conditional resolutions approving master plan amendments pending conformance review by a regional planning commission; and, to change names and titles to reflect the reorganization of the Community Development Department. Recommendations include other matters properly relating thereto. Proposed March 24, 2015. Passed April 14, 2015. Effective April 24, 2015.

August 26, 2014 Revisions: (DCA14-004) BILL NO. 1721, ORDINANCE NO. 1540. An ordinance amending Washoe County Code Chapter 110, Development Code, at Article 302 (Allowed Uses) and Article 304 (Use Classification System) to reduce regulatory barriers to the production and sale of food in certain regulatory zones, and to amend use definitions to authorize community gardens and increase opportunities for local, small scale food production; and providing for other matters properly relating thereto.. Proposed August 12, 2014. Passed August 26, 2014. Effective September 5, 2014.

June 17, 2014 Revisions: (DCA14-003) BILL NO. 1712, ORDINANCE NO. 1532. An Ordinance amending Washoe County Code Chapter 110, Development Code, at Article 302 (Allowed Uses) and Article 304 (Use Classification System) to regulate the location for liquor manufacturing as a commercial use type in appropriate regulatory zones; to create a definition for liquor manufacturing as a commercial use type; and, to add clarity to the definitions of the eating and drinking establishments and liquor sales commercial use types; and providing for other matters properly relating thereto. Proposed May 13, 2014. Passed June 17, 2014. Effective June 27, 2014.

June 17, 2014 Revisions: (DCA14-002) BILL NO. 1713, ORDINANCE NO. 1531. An Ordinance to amend Washoe County Code, Chapter 110, Development Code, at Article 306 (Accessory Uses and Structures), Section 110.306.10(g), to modify certain standards for placement and mitigation of visual impacts of cargo containers as permanent detached accessory structures on residential properties; and providing for other matters properly relating thereto. Proposed May 13, 2014. Passed June 17, 2014. Effective June 27, 2014.

April 8, 2014 Revisions: (DCA14-001) BILL NO. 1708, ORDINANCE NO. 1527. An Ordinance amending the Washoe County Code at Chapter 25 (Business Licenses, Permits and Regulations), Chapter 53 (Miscellaneous Crimes), and Chapter 110 (Development Code) to provide for limited exemption of certain acts from criminal prosecution and for the licensing and land use authorization required to operate medical marijuana establishments (including dispensaries, cultivation facilities, testing laboratories, and production facilities) which are registered and permitted by the State of Nevada under NRS Chapter 453A, and providing for matters properly related thereto. Proposed March 25, 2014. Passed April 8, 2014. Effective April 18, 2014.

February 25, 2014 Revisions: (DCA13-002) BILL NO. 1705, ORDINANCE NO. 1524. An ordinance technically amending the Washoe County Code at Chapter 110, Development Code, by creating a new Article 440, Public School Facilities Design Standards, to implement the requirements of AB87 of the 2013 Legislature by creating common standards for the development of schools between Washoe County and the two municipalities within Washoe County, and

providing for other matters properly relating thereto. Proposed February 11, 2014. Passed February 25, 2014. Effective March 7, 2014.

October 22, 2013 Revisions: (DCA13-001) BILL NO. 1700, ORDINANCE NO. 1519. An ordinance technically amending the Washoe County Code at Chapter 110, Development Code, Article 306, Accessory Uses and Structures, and Article 310, Temporary Uses and Structures, to implement uses authorized by SB206 and AB200 of the 2013 Legislature by allowing the establishment of a Cottage Food Operation as an accessory use in certain facilities, and to add a Farm to Fork event as an allowed temporary use, and providing for other matters properly relating thereto. Proposed October 8, 2013. Passed October 22, 2013. Effective November 1, 2013.

June 25, 2013 Revisions: (DCA12-002) BILL NO. 1685, ORDINANCE NO. 1513. An ordinance amending the Washoe County Code at Chapter 110, Development Code, Article 226, Warm Springs Area, to create a new section in order to regulate equestrian uses, such as boarding stables, commercial stables and equestrian facilities on all legally-established parcels greater than 35 acres in area and zoned General Rural (GR) or General Rural Agricultural (GRA) in the Warm Springs planning area, and to add definitions specific to these types of uses. Further to amend Article 302, Allowed Uses, to modify the Table of Uses for Commercial Use Types to reference Article 226 for commercial stables use types within the Warm Spring planning area. Proposed February 12, 2013 (Planning Commission endorsed version); June 11, 2013 (Board of County Commission/adopted version). Passed June 25, 2013. Effective July 12, 2013.

February 26, 2013 Revisions: (DCA12-008) BILL NO. 1686, ORDINANCE NO. 1504. An ordinance amending the Washoe County Code at Chapter 110, Development Code, Article 304, Use Classification System, and Article 902, Definitions, to remove confusing language in the existing use definition for Inoperable Vehicle Storage, and to re-establish a definition for inoperable vehicle for application to the Inoperable Vehicle Storage use, and providing for other matters properly relating thereto, as recommended for adoption by the Washoe County Planning Commission. Proposed February 12, 2013. Passed February 26, 2013. Effective March 8, 2013.

October 23, 2012 Revisions: (DCA12-003) BILL NO. 1680, ORDINANCE NO. 1499. An ordinance amending the Washoe County Code at Chapter 110, Development Code, Article 438, Grading Standards, to make the Code easier for the general public to understand and interpret, establish an enforcement mechanism that incentivizes voluntary compliance, creates a clear system of minor and major grading activities to reduce the number of required special use permits, and incorporate other beneficial changes as may be identified during the public hearing process and properly relating to the efficient administration of Article 438 of the Development Code. Proposed September 25, 2012. Passed October 23, 2012. Effective November 2, 2012.

(DCA12-004) BILL NO. 1681, ORDINANCE NO. 1500. An ordinance amending the Washoe County Code at Chapter 110, Development Code, Article 420, Storm Drainage Standards, to add language that will be removed from Article 438, Grading Standards. The subject language pertains to building setbacks from drainage ways, as recommended for adoption by the Washoe County Planning Commission. Proposed September 25, 2012. Passed October 23, 2012. Effective November 2, 2012.

(DCA12-005) BILL NO. 1682, ORDINANCE NO. 1501. An ordinance amending Article 910, Enforcement, of the Washoe County Development Code, Washoe County Code Chapter 110, to authorize and establish procedures for the use of administrative and civil court proceedings available under Washoe County Code Chapter 125 to enforce development regulations (including the Development Code, building codes, and permits, maps, orders and development agreements issued under them) including the possible use of stop work orders, remediation orders, administrative proceedings (including the use of warnings, civil penalties and hearings before

administrative hearing officers), summary and judicial abatement proceedings, civil court actions, and revocation of permits and development agreements in addition to the criminal and civil remedies already available under the present Development Code. The ordinance also establishes requirements and procedures for aggrieved persons to appeal zoning and building code decisions of enforcement officials and administrative hearing officers to the Board of Adjustment, and the judicial review of the decisions of the Board of Adjustment. Recommendations include other matters properly related to enforcement of the Development Code. Proposed September 25, 2012. Passed October 23, 2012. Effective November 2, 2012.

September 25, 2012 Revisions: (DCA12-006) BILL NO. 1679, ORDINANCE NO. 1497. An ordinance amending the Washoe County Code at Chapter 110, Article 302, Allowed Uses, and Article 304, Use Classification System, to establish a new classification identified as "Data Center" and specify in which zoning districts and under what conditions it will be permitted and providing other matters properly relating thereto. Proposed September 11, 2012. Passed September 25, 2012. Effective October 5, 2012.

July 30, 2012 Revisions: (DCA12-001) BILL NO. 1673, ORDINANCE NO. 1494. An ordinance amending the Washoe County Code at Chapter 110, Article 302, Allowed Uses, and Article 304, Use Classification System, to define and allow a "Caretaker's Residence – Attached" and (with an administrative permit) "Caretaker's Residence – Detached" in industrial developments and providing for other matters properly relating thereto. Proposed June 26, 2012. Passed July 30, 2012. Effective August 9, 2012.

March 27, 2012 Technical Revisions: (DCA10-007) Bill No. 1666, ORDINANCE NO. 1485. An ordinance amending the Washoe County Code at Chapter 110, Article 302, Allowed Uses; Article 304, Use Classification System; Article 322, Group Care Facilities; and Article 902, Definitions, to add new definitions required by AB 544 of the 2011 Nevada Legislature, and clarify which types of group homes are to be classified and provided with all the same allowed uses as single family residences, and which types are to be classified and treated as civic use facilities under the Nevada Group Home law (NRS 278.0238 through NRS 278.02388); the Federal Fair Housing Amendments Act (42 U.S.C. 3600 – 3631) and a federal court case in 2008; and providing for other matters properly relating thereto. Proposed March 13, 2012. Passed March 27, 2012. Effective April 6, 2012.

January 24, 2012 Revisions: (DCA11-003) BILL NO. 1661, ORDINANCE NO. 1480. An ordinance amending the Washoe County Code at Chapter 110, Article 306, Accessory Uses and Structures, Section 110.306.10(g), Detached Accessory Structures, Cargo Containers, to include Sea-land Containers, Cargo Containers or Other Portable Storage Containers not Designated for Independent or "In-tow Trailer" Highway Use, to clarify what constitutes placement of a container between a dwelling and a road or access easement and to provide specific standards for placement of a cargo container adjacent to an access that is not the primary access to a lot; to provide for minor modification of the required placement standards for a cargo container by the Director of Community Development under certain circumstances; and to remove all ambiguity that cargo containers may not be established as an "Agricultural Building as a Main Use" pursuant to Article 330, Domestic Pets and Livestock; and providing for other matters properly relating thereto. Proposed December 13, 2011. Passed January 24, 2012. Effective February 3, 2012.

(DCA11-004) BILL NO. 1662, ORDINANCE NO. 1481. An ordinance for technical revision and amendment of the Washoe County Code at Chapter 110, Article 304, Use Classification System, at Section 110.304.25(c)(4) to implement the required provisions of SB191, adopted by the Nevada State Senate on June 20, 2011, regarding pet crematories. Proposed December 13, 2011. Passed January 24, 2012. Effective February 3, 2012.

November 8, 2011 Revisions: (DCA11-001) BILL NO. 1654, ORDINANCE NO. 1475. An ordinance amending the Washoe County Code at Chapter 110, to change the name of the existing regulatory zone of "General Rural Residential" to "General Rural Agricultural" and will change some of the allowed and permitted uses presently found in the General Rural Residential Regulatory Zone to allowed and permitted uses from the pre-1993 Regulatory Zone of A-7. Proposed October 25, 2011. Passed November 8, 2011. Ordinance effective November 18, 2011. Provisions effective January 12, 2012.

January 25, 2011 Revisions: (DCA10-006) BILL NO. 1638, ORDINANCE NO. 1458. An ordinance amending the Washoe County Code at Chapter 110, Article 406, Building Placement Standards, to increase the density for Manufactured Home Parks within the Medium Density Suburban (MDS) and Medium Density Suburban 4 (MDS 4) regulatory zones for all areas within Washoe County previously designated Trailer Overlay (TR) zoning and providing other matters properly relating thereto. Proposed January 11, 2011. Passed January 25, 2011. Effective February 4, 2011.

January 11, 2011 Revisions: (DCA09-001) BILL NO. 1637, ORDINANCE NO. 1457. An ordinance amending the Washoe County Code at Chapter 110, Article 416, Flood Hazards, in order to adopt guidelines for the mitigation of lost floodplain storage and maintenance of adequate storage in the Critical Flood Storage Zone according to the procedure adopted by the Truckee River Flood Project Coordinating Committee and to enact that process of determining appropriate mitigation, if any, including specific amendments to establish criteria for "no adverse impact," establish mitigation for grading and fill in the Critical Flood Zone 1, and establish exceptions to grading in the Critical Flood Zone 1, as well as specific amendments to Washoe County Code 110.416.57 "Standards for all Development in Critical Flood Storage Zones" relating to the elevation and location of required mitigation for development in the Critical Flood Storage Zone and other necessary amendments to reflect updated information and procedures on the management of flood hazards. Proposed December 14, 2010. Passed January 11, 2011. Effective January 21, 2011.

December 14, 2010 Revisions: (DCA10-006) BILL NO. 1633, ORDINANCE NO. 1455. An ordinance amending the Washoe County Code at Chapter 110, Article 406, Building Placement Standards, to increase the density for Manufactured Home Parks within the Medium Density Suburban (MDS) and Medium Density Suburban 4 (MDS 4) regulatory zones for all areas within Washoe County previously designated Trailer Overlay (TR) zoning and providing other matters properly relating thereto. Proposed November 9, 2010. Passed December 14, 2010. Effective December 24, 2010. [This Ordinance was reprocessed to provide clarification of the Ordinance and was correctly adopted as Ordinance 1458, effective February 4, 2011.]

September 28, 2010 Revisions: (DCA10-001) BILL NO. 1631, ORDINANCE NO. 1451. An ordinance amending Washoe County Code at Chapter 110, Article 302, Allowed Uses; Article 304, Use Classification System; Article 306, Accessory Uses and Structures; and Article 902, Definitions. The amendments include revisions to the Table of Allowed Uses to eliminate code inconsistencies and amend permit requirements. The proposed amendments revise the majority of Article 306, Accessory Uses and Structures, including but not limited to: buildable area regulations; existing restrictions on two-story accessory structures; connection of a detached accessory structure to water and sewer; permit requirements for structures larger than the main dwelling; the definition and size standards for attached accessory dwellings; the definition, size, and minimum lot standards for detached accessory dwellings; permitting procedures for detached accessory dwellings; definitions and standards for hallways, breezeways; definitions and standards for outdoor storage/outdoor display; changes necessitated by approval of the Nuisance Code; and other matters properly relating thereto. Proposed September 14, 2010. Passed September 28, 2010. Effective January 1, 2011.

July 13, 2010 Revisions: (DCA10-002) BILL NO. 1628, ORDINANCE NO. 1447. An ordinance amending the Washoe County Code at Chapter 110, by amending the entirety of the Development Code, including but not limited to implementation of the naming conventions of "Master Plan," "Regulatory Zone," and "Zoning" which replace "Comprehensive Plan," "Land Use Designation," and "Planned Land Use" where appropriate, and deleting or deleting and replacing obsolete references and data, and accurately reflecting the County's organizational structure; deletion of Article 816, Specific Plans, as obsolete; changes to Division One, Article 106, Regulatory Zones, to define Master Plan Categories and Regulatory Zones and to define the relationships therein, and to establish the location of the Washoe County Regulatory Zone Map; Division Three, Article 302, Allowed Uses, to include "Low Density Suburban 2 (LDS2) and "Medium Density Suburban 4 (MDS4)" as new zoning designations (having been previously created in various adopted area plans); Division Four, Article 406, Building Placement Standards, to provide development standards for Low Density Suburban 2 (LDS2) and Medium Density Suburban 4 (MDS4); Division Eight, Article 820, Amendment of Comprehensive Plan, to define procedures and standards for amending the new master Plan; and finally the creation of Article 821, Amendment of Regulatory Zone, to establish the procedures and standards for the amendment of regulatory zone boundaries, otherwise known as amendments to the zoning map, and providing other matters properly relating thereto. If adopted the ordinance will become effective on the date the Board Chair signs the resolution adopting the Comprehensive Plan Amendments described in CP10-002. Proposed June 22, 2010. Passed July 13, 2010. Effective September 9, 2010.

June 22, 2010 Revisions: (DCA08-009) BILL NO. 1623, ORDINANCE NO. 1443. An ordinance amending the Washoe County Code at Chapter 110, Article 302, Allowed Uses, Article 304, Use Classification System, and Article 326, Wind Machines. The amendments will include the revision to the table of allowed uses to include the addition of new renewable energy use types and the amendments to the standards for wind machines. The proposed amendments would revise all aspects of Article 326 (Wind Machines) including but not limited to setbacks, noise, electromagnetic interference, wildlife impacts, meteorological towers, repair and removal of wind machines and submittal requirements for commercial wind machines and other matters related thereto. Proposed May 25, 2010. Passed June 22, 2010. Effective July 26, 2010.

February 23, 2010 Revisions: (DCA09-002) BILL NO. 1612, ORDINANCE NO. 1433. An ordinance amending Washoe County Code Chapter 110, Development Code, Article 302, Article 304 and Article 410: Table 110.302.05.1 by allowing attached accessory dwellings in the General Rural regulatory zone; Table 110.302.05.3 to require special use permits instead of administrative permits to approve commercial stables in the Low, Medium and High Density Rural, Low Density Suburban, Parks and Recreation, and General Rural regulatory zones; Table 110.302.05.3 and Section 110.304.25 to create a new use for senior continuum of care facilities; Table 110.302.05.5 to allow agricultural sales subject to a special use permit in the Medium and High Density Rural and the Low Density Suburban regulatory zones; Section 110.304.35(c) to add "Aquaculture" to the definition of "Animal Production"; Section 110.304.25(d)(5) and 110.304.30(d)(3) and 110.304.30(f) to add storage of manufactured homes to the typical uses of "Equipment Repair and Sales," "General Industrial – Heavy" and "Inoperable Vehicle Storage"; Section 110.304.20(k) to add "private not for profit" ownership to the definition of "Parks and Recreation" use type; Section 110.304.05(c) to include a reference to the North American Industry Classification System when a use type is not clearly identified in code; Section 110.304.25(d)(7) to remove "car and truck rental lots" from the typical uses specified for "Automotive and Equipment, Storage of Operable Vehicles" use type; Section 110.304.25 to require all permanent commercial uses to construct a commercial structure; Section 110.304.25 to include convention facilities and wedding chapels as typical uses under the "Convention and Meeting Facilities" use type; Table 110.302.05.5 and Section 110.304.35 to create a new use type "Commercial Animal Slaughtering, Mobile"; and Section 110.304.35 to allow small scale produce sales, for a maximum duration of 30 days in any one calendar year in all regulatory

zones; Table 110.302.05.2 to change “Public Service Yards” from a special use permit reviewed by the Planning Commission to one reviewed by the Board of Adjustment; Table 110.302.05.5 to change “Commercial Animal Slaughtering” from a special use permit reviewed by the Planning Commission to on reviewed by the Board of Adjustment; Table 110.410.10.3 to add parking standards for “Senior Continuum of Care Facilities”; Table 110.410.10.5 to add parking standards for “Commercial Animal Slaughtering, Mobile”; and, providing other matters properly related thereto. Proposed February 9, 2010. Passed February 23, 2010. Effective March 5, 2010.

February 9, 2010 Revisions: (DCA09-003) BILL NO. 1611, ORDINANCE NO. 1432. An ordinance amending Washoe County Code at Chapter 110 by eliminating the requirement for retaining a technical expert to perform a technical review on requests for building permits for facilities under Section 110.324.45, 110.324.50, 110.324.55 or other technical review requirements; and removing the public noticing requirement for building permits for wireless communication facilities in 110.324.60(c) and providing other matters properly relating thereto. Proposed January 26, 2010. Passed February 9, 2010. Effective February 19, 2010.

January 12, 2010 Revisions: (DCA08-004) BILL NO. 1605, ORDINANCE NO. 1425. An ordinance amending provisions relating to Washoe County Code Chapter 110, Article 420, Storm Drainage Standards, by establishing options for the use of Low Impact Development (LID) storm drainage techniques for new development; adding guidelines for enforcement; providing a list of projects that require or may require a drainage report; referencing newly completed regional standards manuals and other development codes within the County which relate to drainage; adding sections on erosion and sediment control; omitting Sections 110.420.25, Drainage Report Contents and 110.420.30, Site Drainage and Grading Plans; removing design requirements; clarifying lot line drainage design standards; clarifying drainage easements for maintaining access; not allowing public storm water drainage to discharge into water supply ditches. In addition, a number of standards manuals have been updated, including the Truckee Meadows Regional Drainage Manual, which was completed in April 2009, and these standards must be reflected in the current code requirements. Also, the proposed amendments have reorganized Article 420 by omitting many of the drainage standards, and keeping or adding County procedures, policies and processes, and other matters relating thereto. Proposed December 8, 2009. Passed January 12, 2010. Effective January 22, 2010.

June 23, 2009 Revisions: (DC06-005) BILL NO. 1591, ORDINANCE NO. 1412. An ordinance amending provisions relating to Washoe County Code Chapter 110, Article 306, Accessory Uses and Structures; and Article 310, Temporary Uses and Structures; to provide standards for the temporary and permanent use of cargo containers as detached accessory structures, and other matters properly relating thereto. Proposed June 9, 2009. Passed June 23, 2009. Effective July 3, 2009.

November 10, 2008 Technical Revisions: (DCA08-007) BILL NO. 1566, ORDINANCE NO. 1387. An ordinance amending provisions relating to Washoe County Code Chapter 110, Article 916, Establishment of Committees, by amending the names of the fire agencies responsible for review of parcel map applications, and adding the Washoe County Fire Services Coordinator; and other matters relating thereto. Proposed October 28, 2008. Passed November 10, 2008. Effective November 20, 2008.

July 22, 2008 Revisions: (DCA08-002) BILL NO. 1547, ORDINANCE NO. 1377. An ordinance amending provision relating to Washoe County Code Chapter 110, Article 218, Sun Valley Area, by adding a section that allows the Secondhand Sales use type outright in the neighborhood commercial regulatory zone in Sun Valley. Proposed July 8, 2008. Passed July 22, 2008. Effective August 1, 2008

(DCA08-003) BILL NO. 1558, ORDINANCE NO. 1379. An ordinance amending provision relating to Washoe County Code Chapter 110, Article 222, by amending Section 110.222, Truckee Canyon Area adding a "Wadsworth Commercial Corridor." The Corridor shall consist of those parcels having frontage on State Route (SR) 427, that are east of the Truckee River, west of the County Line and South of SR 427; and to allow Equipment Repair and Sales use type with the approval of a special use permit by the Washoe County Planning Commission [Board of Adjustment] within the Medium Density Suburban (MDS) regulatory zone within the Wadsworth Commercial Corridor; and other matters relating thereto. Proposed July 8, 2008. Passed July 22, 2008. Effective August 1, 2008.

(DCA08-005) BILL NO. 1557, ORDINANCE NO. 1378. An ordinance amending provisions relating to Washoe County Code Chapter 110, Article 206, High Desert Area; Article 210, South Valleys Area; Article 216, Spanish Springs Area; Article 222, Truckee Canyon Area; Article 302, Allowed Uses; Article 306, Allowed Uses and Structures, Article 314, Manufactured Home Parks; Article 316, Recreational Vehicle Parks; Article 324, Communication Facilities; Article 332, Aggregate Facilities; Article 334, Mining; Article 418, Significant Hydrologic Resources; Article 436, Street Design Standards; Article 504, Sign Regulations; Article 810, Special Use Permits, by substituting Board of Adjustment review of special use permits for Planning Commission review where the Planning Commission is enumerated as the reviewing body and other matters properly relating thereto. Proposed July 8, 2008. Passed July 22, 2008. Effective August 1, 2008.

June 24, 2008 Technical Revisions: (DCA08-006) BILL NO. 1556, ORDINANCE NO. 1376. An ordinance amending provisions relating to Washoe County Code Chapter 110, Article 314, Manufactured Home Parks, by deleting the requirement that a manufactured home park's water service must connect to a master water meter, and other matters properly relating thereto. Proposed June 10, 2008. Passed June 24, 2008. Effective July 4, 2008.

June 10, 2008 Revisions: (DCA07-005) BILL NO. 1554, ORDINANCE NO. 1368. An ordinance approving the amendment of the Washoe County Code, Chapter 110, Development Code, Article 302, Allowed Uses and Article 304, Use Classification System, to establish "public service yard" as a new type within certain regulatory zones in Washoe County; and other matters properly relating thereto. Proposed May 27, 2008. Passed June 10, 2008. Effective June 20, 2008.

March 25, 2008 Revisions: (DCA08-001) BILL NO. 1546, ORDINANCE NO. 1364. An ordinance amending the Washoe County Development Code, Chapter 110, by amending Article 606 and adding provisions to Article 602 to establish an application process and agricultural basis for exemption from certain land use and division maps and surveys, and providing other matters properly related thereto. Proposed March 11, 2008. Passed March 25, 2008. Effective April 4, 2008.

December 11, 2007 Technical Revisions: (DC07-002) BILL NO. 1533, ORDINANCE NO. 1356. An ordinance amending the Washoe County Code, Chapter 110, concerning flood hazards, by replacing the Flood Plain Storage Zones map with reference to the Department of Water Resources' updated maps, by adding Federal Emergency Management Agency (FEMA) requirements upon the County and applicants for approval of flood management plans, by adding FEMA construction standards and flood zone requirements in Article 416, by updating certain definitions in Article 902, and by enacting a new Article 920 entitled "Definitions for Floodplain Management," and providing other matters properly relating thereto. Proposed November 20, 2007. Passed December 11, 2007. Effective December 21, 2007.

November 13, 2007 Technical Revisions: (DC07-008) BILL NO. 1531, ORDINANCE NO. 1352. An ordinance amending provisions relating to Washoe County Code Chapter 110, Article 306 by clarifying a maximum of two plumbing fixtures allowed in detached accessory structures,

and other matters properly relating thereto. Proposed October 23, 2007. Passed November 13, 2007. Effective November 23, 2007.

October 23, 2007 Revisions: (DC07-010) BILL NO. 1526, ORDINANCE NO. 1347. An ordinance amending provisions relating to Washoe County Code Chapter 110, Article 100, Introduction and Organization: Title and Contents, to allow for the rejection of incomplete applications; Article 804, Variances, Article 808, Administrative Permits, Article 810, Special Use Permits, and Article 820, Amendment of Comprehensive Plan, for the notification of military installations of certain planning applications and Article 902, Definitions, to define a military installation; Article 312, Fabricated Housing, to amend the age of a manufactured home allowed in a residential zoning district from 5 years to 6 years; Article 606, Parcel Maps, to allow exceptions to the requirement of a parcel map for agricultural property; Article 306, Accessory Uses and Structures, to require a meter for use of a domestic well for a detached accessory dwelling; Article 806, Vacations and Abandonments of Easements or Streets, to require noticing to utilities and cable antenna television providers of vacations and abandonments of easements; Article 322, Group Care Facilities, to amend the distance between care facilities; Article 302, Allowed Uses, and Article 304, Use Classification System, to add a definition of condominium hotels; Article 810, Special Use Permits, to add the requirements of a special use permit for hazardous material, and other matters properly relating thereto. Proposed October 9, 2007. Passed October 23, 2007. Effective: November 2, 2007.

(DC06-004) BILL NO. 1528, ORDINANCE NO. 1349. An ordinance amending provisions relating to Washoe County Code Chapter 110, Article 310, Temporary Uses and Structures,, Section 110.310.34, Contractor's Yards, to lift the current restriction of locating a public agency contractor's yard a minimum of 2,000 feet away from established civic, commercial or residential uses, and other matters properly relating thereto. Proposed October 9, 2007. Passed October 23, 2007. Effective: November 2, 2007.

October 23, 2007 Technical Revisions: (DC07-006) BILL NO. 1525, ORDINANCE NO. 1346. An ordinance amending provisions relating to Washoe County Code Chapter 110, Articles 804, 806, 808 and 810 by clarifying persons with standing to appeal development decisions, and other matters properly relating thereto. Proposed October 9, 2007. Passed October 23, 2007. Effective: November 2, 2007.

June 12, 2007 Technical Revisions: (DC07-003) BILL NO. 1510, ORDINANCE NO. 1331. An ordinance amending provisions relating to Washoe County Code, Chapter 110, Article 306, Accessory Uses and Structures, by clarifying the definition of floor area within a detached accessory dwelling to represent the "livable area" only, and other matters properly relating thereto. Proposed May 22, 2007. Passed June 12, 2007. Effective: June 22, 2007.

August 22, 2006 Revisions: (DC06-003) BILL NO. 1492, ORDINANCE NO. 1313. An ordinance amending provisions relating to Washoe County Code, Chapter 110, Article 438, Grading Standards, by requiring a grading permit to be issued from the Building Official when grading is proposed in excess of fifty (50 cubic yards of material and further removes exemptions to obtaining a grading permit when excavation is less than two (2) feet in depth or fill less than one (1) foot in height regardless of the amount of material either excavated or filled, and other matters properly relating thereto. Proposed August 8, 2006. Passed August 22, 2006. Effective: September 1, 2006.

June 27, 2006 Revisions: (DC06-001) BILL NO. 1486, ORDINANCE NO. 1307. An ordinance amending provisions relating to Washoe County Code, Chapter 110, Article 706, Impact Fees, by permitting an annual increase in the Regional Road Impact Fee by a percentage equal to the average annual percentage of increase in the Consumer Price Index for West Urban Consumers for the preceding 5 calendar years; or by 4.5 percent, whichever is less with the following

exceptions: No increase shall occur within a twelve month period following action by the County to adopt any revisions to the Regional Road Impact Fee Land Use Assumptions in accordance with NRS 278B.290; or the adoption of any ordinance that amends the Regional Road Impact Fee System Capital Improvement Plan; or any action that otherwise increases the Impact Fee, and other matters properly relating thereto. Proposed June 13, 2006. Passed June 27, 2006. Effective July 7, 2006.

March 14, 2006 Revisions: (DC03-007) BILL NO. 1468, ORDINANCE NO. 1290. An ordinance amending provisions relating to Washoe County Code Chapter 110, Article 220, 406 and 902, by limiting the size of garages built on the front property line, to include setback requirements from streets, modification of detached accessory structures siting requirements; Article 406, Building Placement Standard, to require a setback on any easement that is maintained by the County; Article 902, Definitions, to clarify that a corner lot may exist when one street curves around a lot but does not front on two or more streets; and other matters properly relating thereto. Proposed February 28, 2006. Passed March 14, 2006. Effective March 24, 2006.

(DC05-002) BILL NO. 1466, ORDINANCE NO. 1288. An ordinance amending provisions relating to Washoe County Code Chapter 110, Article 106, Regulatory Zones, to delete the transition process; Article 216, Spanish Springs Area to delete references to billboards; Article 304, Use Classification System, to include the appropriate reference to Article 330 for animal sales and services; Article 306, Accessory Uses and Structures, to more accurately define the coverage area for accessory structures; Contents of Division 5 to change the reference to Article 502 to billboard regulations and Article 504 to sign regulations; Article 502, Off-Premise Sign Regulations, to change the title to Billboard Regulations, substitute the term billboard for off-premise sign throughout the article, to add provisions for discontinued billboards; Article 504, On-Premise Sign Regulations, to delete in the title and in the body of the article the term on-premise; Article 606, Parcel Maps, to conform the noticing of a second parcel map to that of a tentative subdivision map; Article 806, Vacations and Abandonments of Easements or Streets, to conform the noticing to a tentative subdivision map application when combined with said application; Article 820, Amendment of Comprehensive Plan, to change the number of times an amendment can occur to four (4) and define the exemption of an application from this number, permit the Director of Community Development to initiate a minor amendment, define the requirements for conducting a neighborhood meeting for an amendment, define the provisions for minor amendments; Article 902, Definitions, to delete the definition of limited flooding area; Article 910, Enforcement, to permit an extension of time for compliance with a notice of violation, to change the reference from Zoning Enforcement Officer to Code Enforcement Officer, to define when notice of a complaint may be considered for the sole use of the Director of Community Development; Article 912, Establishment of Commissions, Boards and Hearing Examiners, to delete the provision that a Planning Commissioner may hold no other public office; Article 916, Establishment of Committees, to change the term of appointment for certain members from one year to a term of office for four years with one permitted to re-appointment, and other matters properly relating thereto. Proposed February 14, 2006. Passed March 14, 2006. Effective March 24, 2006.

January 25, 2005 Revisions: (DC04-007) BILL NO. 1435, ORDINANCE NO. 1259. An ordinance amending provisions relating to Washoe County Code Chapter 110, Article 416, Flood Hazards, to add sections pertaining to flood storage mitigation requirements. The proposed changes will set development standards for properties located within Truckee Meadows Flood Plain Storage Zone 1, and other matters properly related thereto. Proposed December 14, 2004. Passed January 25, 2005. Effective February 4, 2005.

September 14, 2004 Revisions: (DC04-006) BILL NO. 1426, ORDINANCE NO. 1247. An ordinance amending provisions relating to Washoe County Code Chapter 110, Article 330,

Section 110.330.45, 4H and Future Farmers of America Livestock Projects, to modify standards for the keeping of livestock in the Medium Density Suburban (MDS) land use designation for youth enrolled in the 4H and Future Farmers of America (FFA) program. The changes would allow up to six hens, cavy or rabbits on Medium Density Suburban designated lots of 6,000 square feet or more and one sheep, swine or goat on property between 12,000 square feet and one-half acre, and other matters properly related thereto. Proposed August 24, 2004. Passed September 14, 2004. Effective September 24, 2004.

July 13, 2004 Revisions: (DC03-011) BILL NO. 1422, ORDINANCE NO. 1242. An ordinance amending provisions relating to Washoe County Code Chapter 110, Article 324, Communication Facilities, by removing restrictions regarding placement of private satellite dishes and updating standards for the placement of commercial satellite dishes in response to technological advances in the field; to update standards for the tower height of private communications antennas to provide consistency with wireless facilities; to provide new definitions where appropriate; to specify wireless facilities in order of placement preference; to establish development standards for wireless communication facilities (cellular facilities) in response to the 2003 legislative session changes to statutes prohibiting the issuance of discretionary permits for wireless facilities; to include specific permit submittal requirements to support administrative decisions for establishment of a communication site; to establish an appeal process of administrative decisions as mandated by state law in regard to wireless communication facilities; to provide a mechanism to recoup actual costs incurred by the County for expert technical review of wireless facilities; providing for property owner notice prior to issuance of building permit for all wireless facilities; providing for mandated discretionary permit for wireless monopoles and lattice towers, and other matters property relating thereto. Proposed June 15, 2004. Passed July 13, 2004. Effective July 23, 2004.

June 8, 2004 Revisions: (DC04-005) BILL NO. 1421, ORDINANCE NO. 1241. An ordinance amending provisions relating to Washoe County Code Chapter 110, Article 220, Tahoe Area, to preserve buildings and sites which have been listed on a national or state registry of historic places and to provide for appropriate uses other than those permitted in the underlying regulatory zone as an aid to the owners' efforts to preserve the historic or landmark value of the property, to provide for an operations plan that assures appropriate parking is provided, that allow uses on the property which are compatible with the adjacent neighborhoods and which assures that modifications made to the structure(s) or site do not compromise the historic significance of the property's structures or site, to provide notice and appeal of the Director's determination, and other matters properly relating thereto. Proposed May 25, 2004. Passed June 8, 2004. Effective June 18, 2004.

May 25, 2004 Revisions: (DC04-003) BILL NO. 1417, ORDINANCE NO. 1238. An ordinance amending provisions relating to Washoe County Code Chapter 110, Article 330, Domestic Pets and Livestock, to clarify and amalgamate all reference to domestic pets and livestock into one article, to allow dog training services and miniature pigs under specific standards, to reduce the allowable size of a lot for more than two livestock to 35,000 square feet and to clarify the standards for agricultural buildings; to amend Article 300, Regulations of Uses: Title and Contents, to rename Article 330; to amend Article 302, Allowed Uses, to add Dog Training Services as an allowable use in all land use districts; to amend Article 304, Use Classification System, to define Dog Training Services under Animal Sales and Services; to amend Article 306, Accessory Uses and Structures, to remove all reference to animals and agricultural buildings; and to amend Article 902, Definitions, to include definitions for Dog Training Centers, Dog Training Services, and Agricultural Buildings; and other matters properly relating thereto. Proposed May 11, 2004. Passed May 25, 2004. Effective June 4, 2004.

May 11, 2004 Revisions: (DC04-002) BILL NO. 1413, ORDINANCE NO. 1234. An ordinance amending provisions relating to Washoe County Code Chapter 110, Article 104, Growth

Management System, by deleting the reference to Zoning Administrator and adding a reference to Hearing Examiner; Article 324, Communication Facilities, by deleting the reference to Zoning Administrator and adding a reference to Hearing Examiner; Article 414, Noise and Lighting Standards, by deleting the reference to Zoning Administrator and adding a reference to Hearing Examiner; Article 808, Administrative Permits, by deleting the reference to Zoning Administrator and adding a reference to Hearing Examiner, amending review, noticing and appeal procedures, and defining when a permit becomes null and void; Article 810, Special Use Permits, by deleting the reference to Zoning Administrator and adding a reference to Hearing Examiner, amending the review period from 95 days to 65 days; Article 902, Definitions, by deleting the definition of Zoning Administrator; Article 912, Establishment of Commissions, Boards and Hearing Examiner, by amending who may serve as a Hearing Examiner, the powers of a Hearing Examiner, and the review period of applications acted upon by a Hearing Examiner; and Article 914, Establishment of Department, by deleting the reference to Zoning Administrator; and other matters relating thereto. Proposed April 13, 2004. Passed May 11, 2004. Effective May 21, 2004.

(DC04-001) BILL NO. 1416, ORDINANCE NO. 1236. An ordinance amending provisions relating to Washoe County Code Chapter 110, by creating Article 438, Grading Standards, for the purpose of combining into one article those grading standards and requirements currently located in the Department of Building and Safety, the Department of Public Works, and the Department of Community Development; Article 302, Allowed Uses, by deleting Section 110.302.45, Excavation and Grading; Article 434, Regional Development Standards within Cooperative Planning Areas and all of Washoe County, by deleting Section 110.434.30, Grading; and other matters relating thereto. Proposed April 27, 2004. Passed May 11, 2004. Effective May 21, 2004.

October 28, 2003 Revisions: (DC03-008) BILL NO. 1400, ORDINANCE NO. 1220. An ordinance amending provisions relating to Washoe County Code Chapter 110, Article 324, Communication Facilities, by adding a definition of personal wireless services, by permitting personal wireless services facilities on County and state owned structures and land, by eliminating the requirement for a special use permit and substituting review and approval of certain personal wireless services facilities by the Director of Community Development, by further defining standards for approval of certain personal wireless services facilities, by enumerating that denial of applications must be in writing and must identify the standards which were not complied with, by enumerating that a denial of a personal wireless facility may not be based on the environmental effect of radio frequencies emanating from said facilities, by enumerating the procedures for appealing the decision of denial of the Director of Community Development; to amend Article 604, Design Requirements, by adding provisions that prohibit changes in density, space size, setbacks, and uses should a manufactured home park be converted to individually owned lots; to amend Article 608, Tentative Subdivision Maps, by enumerating the types of public utility easements that may be required to be shown on a tentative subdivision map, and by providing a process that a subdivider may request relief from dedication of certain public utility easements; to amend Article 612, Division of Land into Large Parcels, by enumerating the types of public utility easements that may be required to be shown on a tentative subdivision map, and by providing a process that a subdivider may request relief from dedication of certain public utility easements; and other matters properly relating thereto. Proposed October 14, 2003. Passed October 28, 2003. Effective November 7, 2003.

October 14, 2003 Revisions: (DC03-010) BILL NO. 1398, ORDINANCE NO. 1218. An ordinance amending provisions relating to Washoe County Code Chapter 110, Article 306, Accessory Uses and Structures, Section 110.306.10, Detached Accessory Structures, by removing the reference to the prohibition of construction of a detached accessory structure within the “front halves of a corner lot,” and other matters properly relating thereto. Proposed September 23, 2003. Passed October 14, 2003. Effective October 24, 2003.

September 9, 2003 Revisions: (DC03-006) BILL NO. 1392, ORDINANCE NO. 1213. An ordinance amending provisions relating to Washoe County Code Chapter 110, Article 504, On-Premise Sign Regulations, by adding a definition of logo and supporter, permitting the display of logos on a sign for a non-profit organization or educational institution, permitting the display of advertising on the inside of a perimeter fence of an athletic field and associated scoreboards used by teams supported by non-profit organizations or educational institutions, and other matters relating thereto. Proposed August 12, 2003. Passed September 9, 2003. Effective September 19, 2003.

May 27, 2003 Technical Revisions: (DC03-004) BILL NO. 1382, ORDINANCE NO. 1200. An ordinance amending provisions relating to Washoe County Code Chapter 110, Article 400, Development Standards: Title and Contents, by amending the title of Article 434 to "Regional Development Standards within Cooperative Planning Areas and All of Washoe County"; to amend Article 800, Procedures: Title and Contents, by adding the title of Article 822, "Provisions for Amendments to Local Master Plans and Zone Changes in Areas Subject to Cooperative Planning Under the Regional Plan Settlement Agreement"; to amend Article 912, Establishment of Commissions, Boards and Hearing Examiners, by amending the representation of the Planning Commission and Board of Adjustment to reflect all County Commission Districts, and other matters properly related thereto. Proposed May 13, 2003. Passed May 27, 2003. Effective June 6, 2003.

(DC03-005) BILL NO. 1383, ORDINANCE NO. 1201. An ordinance amending provisions relating to Washoe County Code Chapter 110, Article 706, Impact Fees, by amending the date of adoption of the amended Regional Road Impact Fee General Administrative Manual and the amended Regional Road Impact Fee System Capital Improvement Plan, by incorporating the Administrative Manual and Capital Improvement Plan by reference, and other matters relating thereto. Proposed May 13, 2003. Passed May 27, 2003. Effective June 27, 2003.

March 11, 2003 Revisions: (DC03-001) BILL NO. 1370, ORDINANCE NO. 1191. An ordinance amending provisions relating to Washoe County Code Chapter 110, Article 434, Regional Development Standards within Cooperative Planning Areas and all of Washoe County, by incorporating standards to address site compatibility between existing built environment and new development within unincorporated Washoe County. The standards will also apply to cooperative planning amendments within the post-May 8, 2002 Sphere of Influence and lands annexed by the City of Reno and Sparks under the provisions of NRS 268.670 in the Regional Plan except those lands identified in the Settlement Agreement in Nevada Supreme Court Case 38749 (also known as the Verdi Matter). The proposed amendment includes reference to lot adjacency standards of single family residential to single family residential including parcel size matching and buffering; lot adjacency standards from multi-family to single family residential; lot adjacency standards of residential to non-residential; lot adjacency standards of non-residential to non-residential; grading; protection of ridgelines, earthquake fault areas, and other matters properly relating thereto. Proposed February 25, 2003. Passed March 11, 2003. Effective March 21, 2003.

(DC03-002) BILL NO. 1371, ORDINANCE NO. 1192. An ordinance amending provisions relating to Washoe County Code Chapter 110, Article 822, Provisions for Amendments to Local Master Plans and Zone Changes in Areas Subject to Cooperative Planning Under the Regional Plan Settlement Agreement, to address those criteria to be evaluated in the processing of a cooperative plan amendment within the post-May 8, 2002 Sphere of Influence of the City of Sparks and the City of Reno, lands identified by the cities as an area of interest and lands annexed by the City of Reno and Sparks under the provisions of NRS 268.670 in the Regional Plan except those lands identified in the Settlement Agreement in Nevada Supreme Court Case 38749 (also knows as the Verdi Matter). Cooperative plan amendment criteria apply throughout the cooperative planning areas unless the text of a specific policy states otherwise. The master

plan policies and goals and zoning amendment criteria include regional form and pattern (including open space), desired population and employment distribution and jobs/housing balance; regional centers; transit oriented development corridors; potential regional open space; Truckee Meadows service area development standards; concurrency, timing and phasing of infrastructure; facility plans for public infrastructure; public service levels and fiscal effect; and open space, resource constraints and cooperative planning considerations not elsewhere addressed, and other matters properly relating thereto. Proposed February 25, 2003. Passed March 11, 2003. Effective March 21, 2003.

December 10, 2002 Revisions: (DC02-001) BILL NO. 1364, ORDINANCE NO. 1186. An ordinance amending provisions relating to Washoe County Code Chapter 110, Article 502, Off-Premise Sign Regulations, by adding definitions of bus shelter and public transportation operator; by adding provisions regulating advertising copy on bus shelters; by amending the number of permitted off-premise signs in the unincorporated portion of Washoe County, and other matters properly related thereto. Proposed November 26, 2002. Passed December 10, 2002. Effective December 20, 2002.

November 26, 2002 Revisions: (DC02-002) BILL NO. 1357, ORDINANCE NO. 1178. An ordinance amending provisions relating to Washoe County Code Chapter 110, Article 412, Landscaping, by removing the requirements for a five-foot opaque screen around a swimming pool and substituting full compliance with the adopted Washoe County Building Code which includes barrier fences for swimming pools, spas and above ground pools including standards for height, distance from ground, openings, access gates and other criterion to meet safety standards regarding the design and construction of barriers for residential properties, and other matters properly relating thereto. Proposed October 22, 2002. Passed November 26, 2002. Effective December 6, 2002.

(DC02-003) BILL NO. 1358, ORDINANCE NO. 1179. An ordinance amending provisions relating to Washoe County Code Chapter 110, Article 302, Allowed Uses, by modifying the Table of Uses for Veterinary Services, Agricultural, from the requirement of an Administrative Permit to a Special Use Permit issued by the Board of Adjustment in General Rural Land Use Designation; and Article 304, Use Classification System, to expand the definition of Veterinary Services, Agricultural, to include veterinary services for small animals in conjunction with a large animal practice, and other matters properly relating thereto. Proposed October 22, 2002. Passed November 26, 2002. Effective December 6, 2002.

March 12, 2002 Revisions: (DC01-001) BILL NO. 1327, ORDINANCE NO. 1151. An ordinance amending provisions relating to Washoe County Code Chapter 110, Article 212, Southeast Truckee Meadows Area, incorporating the Hidden Valley modifiers (a map is incorporated into the modifiers) restricting commercial and industrial uses, adding development standards regarding grading, cut slope stabilization and revegetation, buffers, sidewalks, street lighting, building height, setbacks and reflective building materials within the area defined as Hidden Valley, exempting General Rural (GR) land use designated parcels from the development standards of the modifiers, and other matters properly relating thereto. Proposed February 12, 2002. Passed March 12, 2002. Effective March 31, 2002.

(DC01-008) BILL NO. 1328, ORDINANCE NO. 1152. An ordinance amending provisions relating to Washoe County Code Chapter 110, Article 502, Off-Premise Signs, by amending the definitions section to conform to changes enacted by the 2001 Nevada State Legislature, to eliminate discrepancies between definitions occurring in the On-Premise Signs regulations and this article and to add a definition of Community Development Director; to eliminate references to specific types of signs for repair and maintenance; to add references to the Department of Building and Safety; to eliminate the requirement for a special use permit for an off-premise sign; to add additional aesthetic requirements; to add a prohibition of new signs until all nonconforming

signs have been removed; to eliminate specified exempt signs; to eliminate specified prohibited signs; to require a public hearing prior to the possible removal of a sign because of development; to eliminate the appeals procedure; to add specific time periods for the issuance of a building permit for an off-premise sign; to eliminate references to information that in the opinion of the permitting authority can be required; to eliminate provisions regarding limitation on signs and fee requirements; to add a provision permitting the substitution of noncommercial messages for commercial messages, and other matters properly relating thereto. Proposed February 12, 2002. Passed March 12, 2002. Effective March 22, 2002.

(DC01-010) BILL NO. 1331, ORDINANCE NO. 1155. An ordinance amending provisions relating to Washoe County Code Chapter 110, Article 814, Development Agreement, and Article 816, Specific Plans, by deleting a substantial number of development requirements from Article 814 and placing them in Article 816, and other matters properly relating thereto. Proposed February 19, 2002. Passed March 12, 2002. Effective March 22, 2002.

(DC01-007) BILL NO. 1332, ORDINANCE NO. 1156. An ordinance amending provisions relating to Washoe County Code Chapter 110, by amending Article 304, Use Classification System, by amending the definitions of Residential Group Home and Group Care; Article 606, Parcel Maps, by amending the time period for action required by the Parcel Map Review Committee, amending the time period for submitting a final map, by specifying to whom an appeal shall be filed, when an appeal hearing shall be scheduled, the time frame for action by the Board of County Commissioners on an appeal, that an action on an appeal by the Board of County Commissioners must be by a majority of the full Commission, that the Commission's decision is final for judicial review purposes, by amending the period of time for recordation or expiration of the map if an appeal is filed, by specifying when a request for waiver to file a parcel map must be acted upon; Article 608, Tentative Subdivision Map, by amending the time period for action required by the Planning Commission, by specifying that an action on a tentative map by the Planning Commission must be by a majority of the full Commission, by specifying that an action on an appeal by the Board of County Commissioners must be by a majority of the full Commission, that the Commission's decision is final for judicial review purposes, by amending the area for noticing, by specifying that a minimum of 30 separate property owners must be notified; Article 610, Final Subdivision Maps, by specifying the date of filing a final map for recordation, by specifying when an appeal hearing shall be scheduled, the time frame for action by the Board of County Commissioners on an appeal, that an action on an appeal by the Board of County Commissioners must be by a majority of the full Commission, that the Commission's decision is final for judicial review purposes; Article 612, Division of Land into Large Parcels, by specifying the time period for submitting a final map, by amending the time frame for approving a final map by the Director of Community Development, by specifying the time frame for action by the Board of County Commissioners on an appeal, that an action on an appeal by the Board of County Commissioners must be by a majority of the full Commission; Article 804, Variances, by amending the area for noticing, by specifying that a minimum of 30 separate property owners must be notified, by specifying when an appeal hearing shall be scheduled, the time frame for action by the Board of County Commissioners on an appeal, that an action on an appeal by the Board of County Commissioners must be by a majority of the full Commission, that the Commission's decision is final for judicial review purposes; Article 806, Vacations and Abandonments of Easements or Streets, by including a government patent easement as being qualified for the processes enumerated in this article, by specifying that an abandonment or vacation must not result in material injury to the public, by stating that an action by the County only addresses its interest in the easement or street being abandoned or vacated, by specifying that the Commission's decision is final for judicial review; Article 810, Special Use Permits, by amending the time period for action required by the Planning Commission or Board of Adjustment, by permitting the Planning Commission or Board of Adjustment to vary development standards as part of the review of a special use permit, by amending the area for noticing, by specifying that a minimum of 30 separate property owners must be notified, by specifying the time

frame for action by the Board of County Commissioners on an appeal, that an action on an appeal by the Board of County Commissioners must be by a majority of the full Commission, that the Commission's decision is final for judicial review purposes; Article 818, Amendment of Development Code, by amending the time period for a report to the Board of County Commissioners on the Planning Commission's recommendation, by amending the time period for a hearing by the Board of County Commissioners, by specifying that the Commission's decision is final for judicial review purposes; by adding a provision that a moratorium takes effect after approval of a resolution to declare a moratorium; by amending the time period for holding a public hearing on the declaration of a moratorium, by specifying that the Board of County Commissioner's decision is final for judicial review purposes; Article 820, Amendment of Comprehensive Plan, by specifying how often the Comprehensive Plan can be amended, by amending the area for noticing, by specifying that a minimum of 30 separate property owners must be notified, by amending the time period for a hearing by the Board of County Commissioners, by specifying that the Commission's decision is final for judicial review purposes; by adding a provision that a moratorium takes effect after approval of a resolution to declare a moratorium; by amending the time period for holding a public hearing on the declaration of a moratorium, by specifying that the Board of County Commissioner's decision is final for judicial review purposes, by permitting the certification of land use maps by electronic means; Article 902, Definitions, by adding a definition of government patent easement; Article 912, Establishment of Commissions, Boards and Hearing Examiners, by increasing the meeting compensation and the monthly limit for compensation for the Planning Commission and the Board of Adjustment; Article 914, Establishment of Department, by adding a provision permitting the Director of Community Development to interpret the provisions of this Chapter, by making the appointment of a Zoning Administrator discretionary, by deleting the Building and Safety Department as a Division of the Department of Community Development, by specifying the process for appealing the Director's interpretation; and other matters properly relating thereto. Proposed February 19, 2002. Passed March 12, 2002. Effective March 22, 2002.

February 12, 2002 Revisions: (DC01-009) BILL NO. 1324, ORDINANCE NO. 1148. An ordinance amending provisions relating to Washoe County Code Chapter 110, Development Code, Article 818, Amendment of Development Code, by adding a provision for technical revisions of the Code, and other matters properly related thereto. Proposed January 15, 2002. Passed February 12, 2002. Effective February 26, 2002.

November 27, 2001 Revisions: (DC01-003) BILL NO. 1316, ORDINANCE NO. 1140. An ordinance amending provisions relating to Washoe County Code Chapter 110, Article 406, Building Placement Standards, and Article 902, Definitions. The amendment adjusts the width standards for the General Rural (GR), General Rural Residential (GRR), Low Density Rural (LDR), Medium Density Rural (MDR) and High Density Rural (HDR) land use designations, adds two additional methods for calculating the lot width, affords a modification process to the lot width standards for compelling environmental considerations, permits 1/16 section parcels (nominally 40 acres) in General Rural and amends definitions to reflect the proposed changes, and other matters relating thereto. Proposed November 13, 2001. Passed November 27, 2001. Effective December 31, 2001.

November 13, 2001 Revisions: (DC01-006) BILL NO. 1311, ORDINANCE NO. 1137. An ordinance amending provisions relating to Washoe County Code Chapter 110, Article 906, Fees, by deleting the definition of a charitable organization that is exempt from the submittal of development application fees, deleting the provision for reinitiating a Code amendment application and adding a new provision enumerating the process for refunding development application fees, and other matters properly relating thereto. Proposed October 23, 2001. Passed November 13, 2001. Effective December 1, 2001.

January 23, 2001 Revisions: (DCA99-3) BILL NO. 1286, ORDINANCE NO. 1112. An ordinance amending provisions relating to Washoe County Code Chapter 110, by substituting Article 418, Significant Hydrologic Resources, for Article 418, Wetlands (a reserved article), to incorporate new standards to regulate development areas adjacent to perennial streams in the unincorporated areas of Washoe County. This article establishes standards for use of land in "Critical Stream Zone Buffer Area" and "Sensitive Stream Zone Buffer Area" to preserving and protecting perennial streams within Washoe County to implement a policy of "no net loss" of significant hydrological resource size, function and value. The proposed standards rely on the special use permit process to identify appropriate mitigation when development comes within 150 feet of the centerline of identified perennial streams. Changes are also proposed for Article 902, Definitions, to add new definitions as appropriate to clarify phrases and terms in Article 418, Significant Hydrologic Resources, and other matters properly relating thereto. Proposed November 11, 2000. Passed January 23, 2001. Effective February 15, 2001.

November 28, 2000 Revisions: (DC0009-001) BILL NO. 1284, ORDINANCE NO. 1108. An ordinance amending Chapter 110 of the Washoe County Code (Washoe County Development Code) Article 804, Variances, and other matters pertaining thereto. Proposed November 14, 2000. Passed November 28, 2000. Effective December 15, 2000.

July 25, 2000 Revisions: (DCA99-7) BILL NO. 1278, ORDINANCE NO. 1102. An ordinance amending Chapter 110 of the Washoe County Code (Washoe County Development Code) Article 306, Accessory Uses and Structures, and Article 902, Definitions, by adopting standards for "non-municipal airstrips and glider ports" and "personal landing fields" and other matters properly relating thereto. Proposed July 11, 2000. Passed July 25, 2000. Effective August 11, 2000.

July 11, 2000 Revisions: (DC0005-001) BILL NO. 1272, ORDINANCE NO. 1096. An ordinance amending provisions relating to Washoe County Code, Chapter 110, Article 700, Infrastructure Availability and Financing: Title and Contents, and Article 706, Impact Fees, by amending the title of Article 706, Impact Fees to delete the reference to a future ordinance; and to amend Article 706, Impact Fees, by changing the definition of Department from the Department of Community Development to the Department of Water Resources; and other matters properly relating thereto. Proposed June 13, 2000. Passed July 11, 2000. Effective July 28, 2000.

(DC0002-002) BILL NO. 1273, ORDINANCE NO. 1097. An ordinance amending provisions relating to Washoe County Code, Chapter 110, Article 302, Allowed Uses, and Article 304, Use Classification System, by renaming Adult Entertainment in Table 110.302.05.3, Table of Uses (Commercial Use Types) to Adult Characterized Business, to reference Washoe County Code, Chapter 25 (Business Licenses, Permits and Regulations) and to delete the requirement for a special use permit reviewed by the Planning Commission in the GC (General Commercial) and TC (Tourist Commercial) regulatory zones; and to amend Article 304, Use Classification System, by renaming Adult Entertainment use description to Adult Characterized Business and to delete the reference to adult uses defined in NRS 278 and insert Adult Characterized Business definitions as referenced in Washoe County Code, Chapter 25 (Business Licenses, Permits and Regulations); and other matters properly relating thereto. Proposed June 13, 2000. Passed July 11, 2000. Effective July 28, 2000.

April 11, 2000 Revisions: (DC0002-001) BILL NO. 1267, ORDINANCE NO. 1091. An ordinance amending the Washoe County Code by amending provisions relating to Washoe County Code Chapter 110, Article 416, Flood Hazards, by adding a severability clause; adding provisions recognizing the lowest adjacent grade (LAG) in the appeals process and letter of map amendment; changing references to zones AE and AH and deleting references to shaded X Zone B and A1-A30; enumerating the requirement for permits from applicable state and federal agencies; defining that an "elevation certificate" form is a Federal Emergency Management Agency form; amending the notification requirements to delete the Nevada Division of Emergency Management

and adding the Nevada Division of Water Planning; adding a requirement that all subdivisions of greater than 50 lots or 5 acres shall provide base flood elevation data as part of the application submittal; deleting the reference to limited flooding areas in construction standards; requiring a securely anchored permanent foundation in flood zones for fabricated housing; eliminating manufactured home parks and subdivisions and dwellings in existing subdivisions as exceptions to prohibited uses and structures within floodways; enumerating the requirement to have flood insurance when a variance is granted; and to amend Article 902, Definitions, by amending the definition of the 100 year flood, and other matters properly relating thereto. Proposed March 28, 2000. Passed April 11, 2000. Effective April 28, 2000.

January 11, 2000 Revisions: (DCA99-5) BILL NO. 1263, ORDINANCE NO. 1087. An ordinance amending the Washoe County Code by amending provisions relating to Chapter 110 (Development Code) of the Washoe County Code by amending Article 106, Regulatory Zones, to more clearly define when a site review approval would expire, to change the period and circumstances in which a site review approved through the transition procedures would have a comprehensive plan amendment initiated and other matters properly related thereto. Proposed December 21, 1999. Passed January 11, 2000. Effective January 28, 2000.

(DCA99-4A) BILL NO. 1264, ORDINANCE NO. 1088. An ordinance amending the Washoe County Code by amending provisions relating to Chapter 110 (Development Code) of the Washoe County Code by amending Article 304, Use Classification System, to change the number of persons permitted to reside in a residential group home and in a group care facility; Article 322, Group Care Facilities, to change the distancing that determines overconcentration of residential group homes and group care facilities; Article 606, Parcel Maps, to permit the merging and re-parceling of property without the benefit of a reversion to acreage map, to enumerate certain types of land division that are subject to a waiver of a parcel map, to enumerate the considerations for approving a parcel map, to add requirements for evaluating a second or subsequent parcel map, to change the time period that the staff can review a final parcel map and the Director of Community Development can take action, to define the amount of a security for improvements and when said security is pro-rated, to change the time for an appeal, to add language for certificates accompanying a merger and re-subdivision of land, to permit the Parcel Map Review Committee to be the body who may waive the filing of a parcel map; Article 608, Tentative Subdivision Maps, to permit the merging and re-subdividing of property without benefit of a reversion to acreage map, to add provisions permitting electronic noticing; Article 610, Final Subdivision Maps, to add language for certificates accompanying a merger and re-subdivision of land, to define when a security is pro-rated; Article 612, Division of Land into Large Parcels, to permit the merging and re-subdividing of property without benefit of a reversion to acreage map, to add language for certificates accompanying a merger and re-subdivision of land, to define when a security is pro-rated; Article 614, Reversion to Acreage, to enumerate when a reversion to acreage is not required for subdividing land; Article 804, Variances, to add provisions permitting electronic noticing; Article 808, Administrative Permits, to add provisions permitting electronic noticing; Article 810, Special Use Permits, to add provisions permitting electronic noticing; Article 814, Development Agreements, to add provisions permitting electronic noticing, when compliance with noticing is achieved; Article 818, Amendment of Development Code, to add provisions permitting electronic noticing, to change the number of citizen advisory board members who must be notified; Article 820, Amendment of Comprehensive Plan, to add language enumerating what must be contained in a notice, to add provisions permitting electronic noticing, to add language permitting a ballot to be completed and returned when an amendment would result in less density or intensity of use of land; Article 902, Definitions, to add definitions for contiguous parcels and rear lot line, and to add a definition of electronic notice; Article 916, Establishment of Committees, to add language making the Parcel Map Review Committee a subcommittee of the Planning Commission, and other matters properly relating thereto. Proposed December 21, 1999. Passed January 11, 2000. Effective January 28, 2000.

(DCA99-4B) BILL NO. 1265, ORDINANCE NO. 1089. An ordinance amending the Washoe County Code by amending provisions relating to Chapter 110 (Development Code) of the Washoe County Code by amending Article 306, Accessory Uses and Structures, by modifying the provisions concerning the use of a manufactured home as a detached accessory dwelling; to amend Article 312, Fabricated Housing, by modifying provisions to allow a manufactured home constructed within five years of its placement on any lot permitting a single family residence, by restricting the size and type of manufactured housing that is permitted, by adding provisions requiring permanent affixing of manufactured housing to property, by requiring the masking of supports, by requiring the conversion of manufactured housing to real property, by adding provisions for the location of manufactured housing between six hundred forty square feet and one thousand two hundred square feet; to amend Article 902, Definitions, by adding a definition of placement, and other matters properly relating thereto; and by making the ordinance effective retroactive to January 1, 2000. Proposed December 21, 1999. Passed January 11, 2000. Effective retroactive to January 1, 2000.

August 24, 1999 Revisions: (DCA98-10) BILL NO. 1252, ORDINANCE NO. 1076. An ordinance amending Chapter 110 of the Washoe County Code (Section 110.226.15 [Warm Springs Area] and Section 110.902.15 [Definitions]) to specify revisions to attached or detached accessory dwellings, temporary recreational vehicle use, business vehicle parking, bed and breakfast inns, private air strips, glider ports and personal landing fields and factory built homes and other matters pertaining thereto. Proposed August 10, 1999. Passed August 24, 1999. Effective October 1, 1999.

June 8, 1999 Revisions: (DCA98-8) BILL NO. 1242, ORDINANCE NO. 1066. An ordinance amending the Washoe County Code by amending provisions relating to the Regional Road Impact Fee by incorporating a reference to the Regional Road Impact Fee System General Administrative Manual and deleting sections that refer to the Interlocal Cooperative Agreement, level of service standard, Administrative Manual, definitions and rules of construction, fees to be imposed on traffic generating land development activity, independent fee calculation study, credits, refund of fees, private amendments to Regional CIP and Local CIPs, review every two years; adopting the most current Capital Improvements Program and fee schedule; and other matters properly related thereto. Proposed May 18, 1999. Passed June 8, 1999. Effective July 9, 1999.

(DCA99-1) BILL NO. 1243, ORDINANCE NO. 1067. An ordinance amending the Washoe County Code by amending provisions relating to Article 208, North Valleys Area, by amending the water rights dedication requirements to change the timing of dedication to the time a final subdivision or parcel map, or a final map of division into large parcels is submitted, a special use permit or other development application is submitted, whichever first occurs and deleting provisions that require the dedication of water rights at the time of submittal of a Comprehensive Plan amendment; and other matters properly related thereto. Proposed May 18, 1999. Passed June 8, 1999. Effective June 25, 1999.

May 25, 1999 Revisions: (DCA98-11) BILL NO. 1241, ORDINANCE NO. 1065. An ordinance amending Chapter 110 of the Washoe County Code to remove a reference to WCC Chapter 105 from the Development Code (WCC 110.104.30) and to allow the creation of parcels that do not conform to the size requirements of the zoning, when the parcel will be used by public agencies or for utility services for utilities regulated by the Public Utilities Commission (WCC 110.404.10). Proposed May 11, 1999. Passed May 25, 1999. Effective July 1, 1999.

May 11, 1999 Revisions: (DCA97-4A) BILL NO. 1240, ORDINANCE NO. 1064. An ordinance amending the Washoe County Code by amending provisions relating to Chapter 110 (Development Code), Article 436, Street Design Standards, and other matters pertaining thereto. Proposed April 20, 1999. Passed May 11, 1999. Effective May 28, 1999.

November 10, 1998 Revisions: (DCA98-6) BILL NO. 1217, ORDINANCE NO. 1041. An ordinance amending Chapter 110 of the Washoe County Code to amend Section 110.410.10 and Table 110.410.10.1 to add parking requirements for fabricated housing sales, and to amend Article 606, Parcel Maps, Article 608, Tentative Subdivision Maps, Article 610, Final Subdivision Maps, Article 612, Division of Land into Large Parcels, Article 614, Reversion to Acreage, Article 616, Amendments of Map, Article 806, Vacations and Abandonments of Easements or Streets, and Article 814, Development Agreements, to reflect changes to the Nevada Revised Statutes enacted in 1997, and other matters pertaining thereto. Proposed October 13, 1998. Passed November 10, 1998. Effective December 1, 1998.

(DCA98-9) BILL NO. 1219, ORDINANCE NO. 1043. An ordinance amending Chapter 110 of the Washoe County Code (Development Code) by amending Section 110.210.05 of Article 210, South Valleys Area, thereof to specify groundwater dedication requirements for the Washoe Valley, Pleasant Valley, Eagle Valley and Truckee Meadows Hydrographic Basins. Proposed October 13, 1998. Passed November 10, 1998. Effective December 1, 1998.

October 13, 1998 Revisions: (DCA96-6) BILL NO. 1215, ORDINANCE NO. 1039. An ordinance amending Chapter 110 of the Washoe County Code to add an article specifically regulating aggregate facilities (Article 332), to change the regulation of mining (Article 334) generally consistent with the new regulations for aggregate facilities, and to establish new procedures for the enforcement of the conditions of approval of aggregate facilities and mining. Proposed September 22, 1998. Passed October 13, 1998. Effective November 1, 1998.

(DCA98-2) BILL NO. 1216, ORDINANCE NO. 1040. An ordinance amending Chapter 110 of the Washoe County Code to specifically prohibit use variances (Section 110.302.00), to delete the regulations regarding home occupations (Article 308), to remove the conformancy requirements for variances (Section 110.804.35), special use permits (Section 110.810.45) and administrative permits (Section 110.808.25), and to establish new procedures for the issuance of administrative permits (Article 808). Proposed September 22, 1998. Passed October 13, 1998. Effective November 1, 1998.

August 25, 1998 Revisions: (DCA98-4) BILL NO. 1212, ORDINANCE NO. 1036. An ordinance amending Chapter 110 of the Washoe County Code (Development Code) by amending Article 310 “Temporary Uses and Structures,” thereof to change the regulations governing outdoor festivals, to add provisions regarding temporary camping and temporary occupancy for the care of the infirm, and to clarify the use of mobile homes, manufactured homes, travel trailers, commercial coaches and recreational vehicles for temporary occupancy purposes, temporary contractor’s offices and temporary real estate offices. Proposed July 28, 1998. Passed August 25, 1998. Effective September 1, 1998.

August 11, 1998 Revisions: (DCA97-6) BILL NO. 1211, ORDINANCE NO. 1035. An ordinance amending the Washoe County Code by amending provisions relating to on-premise signs to add a new Article 504 “On-Premise Sign Regulations”; change references from pre-May 26, 1993 zoning designations to current regulatory classifications that are compatible; change references from the County Building Official to the Director of Community Development; adopt a new numbering system to conform to the Development Code format; and other matters relating thereto. Proposed July 14, 1998. Passed August 11, 1998. Effective August 28, 1998.

July 31, 1998 Revisions: (DCA98-3) BILL NO. 1202, ORDINANCE NO. 1026. An ordinance amending Chapter 110 of the Washoe County Code (Development Code) by amending Article 422 “Water and Sewer Resource Requirements,” thereof to exempt development in the Tahoe planning area from the requirements of the article. Proposed June 16, 1998. Passed July 31, 1998. Effective July 1, 1998.

June 16, 1998 Revisions: (DCA97-4) BILL NO. 1198, ORDINANCE NO. 1022. An ordinance amending Chapter 110 of the Washoe County Code (Development Code) to amend Article 420 "Storm Drainage Standards" and other matters pertaining thereto. Proposed May 26, 1998. Passed June 16, 1998. Effective July 1, 1998.

(DCA97-7) BILL NO. 1199, ORDINANCE NO. 1023. An ordinance amending Chapter 110 of the Washoe County Code (Development Code) to amend Article 106 "Regulatory Zones," Section 110.206.05 of Article 206 "High Desert Area," Section 110.218.35 of Article 218 "Sun Valley Area," Article 302, "Allowed Uses," Article 304 "Use Classification System," Section 110.312.05 of Article 312 "Fabricated Housing," Section 110.314.05 of Article 314 "Manufactured Home Parks," Article 406 "Building Placement Standards," Section 110.420.35 of Article 420 "Storm Drainage Standards," and other matters pertaining thereto. Proposed May 26, 1998. Passed June 16, 1998. Effective July 1, 1998.

May 26, 1998 Revisions: (DCA97-5) BILL NO. 1195, ORDINANCE NO. 1019. An ordinance amending the Washoe County Code by repealing, adding and amending provisions relating to off-premise signs to change references from pre-May 26, 1993 zoning designations to current regulatory classifications that are comparable; to change the parallel alignment of back-to-back billboards to an allowed "Vee" alignment of no more than twenty (20) degrees; to change the enforcement agency from the Building and Safety Division to the Department of Community Development; to change the organization and numbering of the regulations to conform with the current Development Code format; to change the size of billboards from 480 square feet to 672 square feet; to change the purpose of the regulations to reflect beneficial aspects of billboards; to change the distance of billboards from a circumference measurement to a linear measurement; to add Tourist Commercial Regulatory Zone as a permissible land use for the erection of a billboard; to add a provision that limits the maximum number of billboards to 125; to add definitions of cut-out, repair and reconstruction; to add provisions for the reconstruction of nonconforming billboards; to add provisions to permit cut-outs; to create a separate article, Article 502, for off-premise sign regulations; to delete the provisions for a retention permit; to delete the provisions for amortization of nonconforming billboards; to delete Boynton Lane and E. 2nd Street from permissible roadway segments list and clarify that the portion of I-580 south of the northern most intersection of U.S. 395/Interstate 580 and South Virginia Street (NDOT Structure Number I-1799 at Mile Post IR-580-WA-21.64) is not a permissible roadway segment, and other matters relating thereto. Proposed May 12, 1998. Passed May 26, 1998. Effective June 5, 1998.

May 12, 1998 Revisions: (DCA98-1) BILL NO. 1193, ORDINANCE NO. 1017. An ordinance amending Chapter 110 of the Washoe County Code to amend Article 220 "Tahoe Area" to modify the standards for construction of a garage; at or below grade parking decks, walkways and decks; construction below a parking deck; granting legal conforming compliance with building setback requirements for homes constructed prior to 1990 when the building pad was not delineated on the final map; and utilizing Tahoe Regional Planning Agency height calculations for all structures. In addition, an administrative change to Section 110.226.05, Pyramid Lake Highway, Article 226 "Warm Springs Area" would substitute Pyramid Lake Highway for Interstate 80. Proposed April 28, 1998. Passed May 12, 1998. Effective June 1, 1998.

January 13, 1998 Revisions: (DCA97-9) BILL NO. 1178, ORDINANCE NO. 1003. An ordinance amending Chapter 110 of the Washoe County Code (Development Code) and amending Article 706 "Impact Fees" to add Drainage Project Impact Fees to be imposed within the Southeast Truckee Meadows Specific Plan area, and other matters pertaining thereto. Proposed December 9, 1997. Passed January 13, 1998. Effective January 1, 1998.

(DCA97-3) BILL NO. 1180, ORDINANCE NO. 1004. An ordinance amending Chapter 110 of the Washoe County Code (Development Code) to amend Division 3 "Contents"; Article 300 "Regulation of Uses: Title and Contents"; Article 302 "Allowed Uses"; Article 304 "Use

Classification System"; Article 324 "Antennas"; Article 402 "Density/Intensity Standards"; and other matters pertaining thereto. Proposed December 16, 1997. Passed January 13, 1998. Effective January 30, 1998.

(DCA97-8) BILL NO. 1181, ORDINANCE NO. 1005. An ordinance amending Chapter 110 of the Washoe County Code (Development Code) by amending Article 222 "Truckee Canyon Area," thereof. Proposed December 23, 1997. Passed January 13, 1998. Effective February 1, 1998.

June 10, 1997 Revisions: (DCA97-2) BILL NO. 1157, ORDINANCE NO. 982. An ordinance amending Chapter 110 of the Washoe County Code to amend Article 220 "Tahoe Area" to modify the standards for detached accessory structures, height measurement of residential structures and foundation removal in the Tahoe Basin. Proposed May 13, 1997. Passed June 10, 1997. Effective June 1, 1997.

April 15, 1997 Revisions: (DCA97-1) BILL NO. 1153, ORDINANCE NO. 978. An ordinance amending the Washoe County Code to modify Article 106 "Regulatory Zones" to extend the period that the transition process applies to parcels with comparable land use district (zoning) classifications and land use designations, and to parcels with SP (Specific Plan) land use designations and parcels with an area identified by the Board of County Commissioners for the preparation of a Specific Plan, to permit technical amendments to land use maps by the Director of Community Development and other items properly related thereto. Proposed March 25, 1997. Passed April 15, 1997. Effective May 1, 1997.

December 10, 1996 Revisions: BILL NO. 1145, ORDINANCE NO. 970. An ordinance amending Chapter 80 of the Washoe County Code by repealing Sections 80.010 through 80.220 and adding new sections 80.010 through 80.080 creating a Department of Community Development; providing for the appointment of Director of department; creating the position of Manager of a Division of Building and Safety; making the department the repository for records of Planning Commission and Board of Adjustment; providing that the department assume responsibility for the Washoe County Comprehensive Plan, Development Code and other activities carried out by former Department of Development Review and Comprehensive Planning; providing for Business License and Code Enforcement activities to be carried out by department; and repealing references to Department of Development Review and Department of Comprehensive Planning; and other matters relating thereto. Proposed November 26, 1996. Passed December 10, 1996. Effective December 30, 1996.

August 27, 1996 Revisions: (DCA94-10) BILL NO. 1140, ORDINANCE NO. 965. An ordinance amending Chapter 110 of the Washoe County Code (Development Code) by amending Article 308 "Home Occupations," and Article 902 "Definitions," and other matters pertaining thereto. Proposed August 13, 1996. Passed August 27, 1996. Effective October 1, 1996.

July 9, 1996 Revisions: (DCA96-4) BILL NO. 1134, ORDINANCE NO. 959. An ordinance amending the Washoe County Code to modify Article 302 "Allowed Uses" to delete the requirement of a special use permit for a residential group home, to modify Article 304 "Use Classification System" to more clearly define the number of persons permitted in a residential group home and to modify Article 322 "Group Care Facilities" to provide for standards that must be met to allow the establishment of a residential group home; to modify Article 906 "Fees" to delete the section addressing simultaneous applications; to modify Article 912 "Establishment of Commissions and Boards" to add a Hearing Examiner for hearing of and final action on variances, eliminate Article 802 "Administrative Waivers," modify Article 804 "Variances" to include references to Hearing Examiners, and modify Article 308 "Home Occupations," Article 312 "Fabricated Housing," Article 324 "Antennas," Article 406 "Building Placement Standards," Article 414 "Noise and Lighting Standards," Article 800 "Procedures: Title and Contents" and Article 908 "Issuance of Permits and Licenses" to delete references to administrative waivers; to

modify article 912 “Establishment of Commissions and Boards” to change the length of terms for Board of Adjustment members to four years and the qualifications to be member to require residency in the unincorporated portion of the County and within certain County Commission Districts and to modify Article 916 “Establishment of Committees” to change the composition of the Parcel Map Review Committee and allow the Planning Commission and Board of Adjustment to appoint non-members to the Design Review Committee. Proposed June 11, 1996. Passed July 9, 1996. Effective July 26, 1996.

May 14, 1996 Revisions: (DCA96-1) BILL NO. 1126, ORDINANCE NO. 951. An ordinance amending the Washoe County Code to delete the posting requirements stipulated in Sections 110.804.20(c) and 110.810.25(c) of the Development Code. Proposed April 9, 1996. Passed May 14, 1996. Effective June 7, 1996.

(DCA96-3) BILL NO. 1127, ORDINANCE NO. 952. An ordinance amending the Washoe County Code to add provisions to the Development Code regarding relocation of substandard lots through the boundary line adjustment procedure. Proposed April 9, 1996. Passed May 14, 1996. Effective June 7, 1996.

April 9, 1996 Revisions: (DCA94-4) BILL NO. 1124, ORDINANCE NO. 949. An ordinance amending Chapter 110 of the Washoe County Code (Development Code) to add Article 432 "Open Space Standards," and other matters pertaining thereto. Proposed March 12, 1996. Passed April 9, 1996. Effective May 1, 1996.

(DCA96-2) BILL NO. 1123, ORDINANCE NO. 948. An ordinance amending Chapter 110 of the Washoe County Code (Development Code) by amending Article 208 "North Valleys Area" thereof. Proposed March 12, 1996. Passed April 9, 1996. Effective May 1, 1996.

February 13, 1996 Revisions: (DCA95-3) BILL NO. 1117, ORDINANCE NO. 942. An ordinance amending Chapter 110 of the Washoe County Code (Development Code) to amend Article 204 "Forest Area," Article 214 "Southwest Truckee Meadows Area,” Article 902 "Definitions," and other matters pertaining thereto. Proposed November 14, 1995. Passed February 13, 1996. Effective April 1, 1996.

October 10, 1995 Revisions: (DCA95-4) BILL NO. 1113, ORDINANCE NO. 938. An ordinance amending Chapter 110 of the Washoe County Code (Development Code) and amending Article 706 "Impact Fees" to add the Regional Road Impact Fee, and other matters pertaining thereto. Proposed September 19, 1995. Passed October 10, 1995. Effective December 14, 1995.

(DCA95-1) BILL NO. 1114, ORDINANCE NO. 939. An ordinance amending Chapter 110 of the Washoe County Code (Development Code) to amend Article 206 "High Desert Area," Article 218 "Sun Valley Area," Article 300 "Regulation of Uses: Title and Contents," Article 306 "Accessory Uses and Structures," Article 312 "Fabricated Housing," Article 400 "Development Standards: Title and Contents," Article 406 "Building Placement Standards," Article 410 "Parking and Loading," and Article 804 "Variances," and other matters pertaining thereto. Proposed September 26, 1995. Passed October 10, 1995. Effective November 1, 1995.

January 24, 1995 Revisions: (DCA94-11) BILL NO. 1101, ORDINANCE NO. 926. An ordinance amending Chapter 110 of the Washoe County Code (Development Code) to readopt Article 306 "Accessory Uses and Structures" thereof to incorporate previous amendments to said article which were inadvertently omitted with the adoption of Ordinance No. 899. Proposed January 10, 1995. Passed January 24, 1995. Effective retroactive to May 31, 1994.

December 27, 1994 Revisions: (DCA94-9) BILL NO. 1097, ORDINANCE NO. 922. An ordinance amending Chapter 110 of the Washoe County Code (Development Code) to address

new standards and regulations provided by the Federal Emergency Management Agency (FEMA) pertaining to 100-year flood plain designations, to clarify construction standards in all flood hazard areas and to correct references to fabricated housing requirements therefor by amending Sections 110.416.60 through 110.416.80, inclusive, portions of Article 416 "Flood Hazards"; amending Article 902 "Definitions"; and repealing Sections 110.416.85 and 110.416.90, inclusive, portions of Article 416 "Flood Hazards." Proposed December 13, 1994. Passed December 27, 1994. Effective retroactive to September 30, 1994.

(DCA94-8) BILL NO. 1098, ORDINANCE NO. 923 An ordinance amending Chapter 110 of the Washoe County Code (Development Code) to amend Article 210 "South Valleys Area" and add new standards thereto. Proposed December 13, 1994. Passed December 27, 1994. Effective February 6, 1995.

(DCA94-7) BILL NO. 1099, ORDINANCE NO. 924 An ordinance amending Chapter 110 of the Washoe County Code (Development Code) to reduce the size of the required on-site signs advertising special use permits and variances and reducing the required posting period therefor by amending Section 110.804.20, a portion of Article 804 "Variances" and Section 110.810.25, a portion of Article 810 "Special Use Permits." Proposed December 13, 1994. Passed December 27, 1994. Effective February 6, 1995.

December 13, 1994 Revisions: (DCA94-5) BILL NO. 1091, ORDINANCE NO. 916. An ordinance amending Chapter 110 of the Washoe County Code (Development Code) to amend Article 206 "High Desert Area" and Article 902 "Definitions" thereof to add new standards thereto. Proposed November 8, 1994. Passed December 13, 1994. Effective retroactive to May 26, 1993.

(DCA94-6) BILL NO. 1094, ORDINANCE NO. 919. An ordinance amending the Washoe County Code to add outdoor and indoor lighting standards to the Development Code; to change the name of Article 414, Chapter 110, to "Noise and Lighting Standards"; and providing other matters properly relating thereto; by amending Article 320 "Bed and Breakfast Establishments," Article 340 "Industrial Performance Standards," Division Four "Contents," Article 400 "Development Standards: Title and Contents," and Article 414 "Noise Standards." Proposed November 15, 1994. Passed December 13, 1994. Effective February 1, 1995.

September 20, 1994 Revisions: (DCA94-4) BILL NO. 1083, ORDINANCE NO. 908. An ordinance amending Chapter 110 of the Washoe County Code (Development Code) to add Article 340 "Industrial Performance Standards," Article 420 "Storm Drainage Standards," and Article 436 "Street Design Standards," thereto, and to amend Article 604 "Design Requirements" and Article 902 "Definitions, thereof to reflect new standards. Proposed August 9, 1994. Passed September 20, 1994. Effective October 15, 1994.

July 12, 1994 Revisions: (DCA94-3) BILL NO. 1081, ORDINANCE NO. 906. An ordinance amending the Washoe County Code to correct the date of effectuation of the Development Code for properties in a sphere of influence; to enumerate the uses of manufactured housing sales and repair; and to amend the appointment and qualifications and compensation for Planning Commissioners and add compensation for Board of Adjustment members by amending portions of Article 106 "Regulatory Zones," Article 302 "Allowed Uses," Article 304 "Use Classification System," and Article 912 "Establishment of Commissions and Boards." Proposed June 28, 1994. Passed July 12, 1994. Effective July 27, 1994.

May 17, 1994 Revisions: (DCA94-1) BILL NO. 1074, ORDINANCE NO. 899. An ordinance amending the Washoe County Code to clarify that uses not classified or interpreted as permitted in the Development Code are prohibited; to change detached accessory dwellings from a special use permit issued by the Planning Commission to a special use permit issued by the Board of

Adjustment; to change residential group homes as a use approved as an administrative permit to a use approved as a special use permit reviewed and approved by the Board of Adjustment; to enumerate the uses of commercial slaughtering and agricultural slaughtering; to require an administrative permit for garages that may be built to the front property line when the property has a 20 percent or greater slope; to define the standards by which agricultural slaughtering may operate; to correct the deletion of containerized trash as prohibited as storage in the front yard, except in limited circumstances; to permit the sale of firewood as a temporary use; to clarify that lots smaller than the minimum regulatory zoning standards can be created in common open space development; to define the area in which a fence or other visual obstruction on a corner lot can be erected up to six feet; to change the parking standards for residential group homes and passive and active recreation uses; to require a one-year period for the recording of a parcel map; to require that notices be mailed to adjacent property owners, citizen advisory boards and affected utilities for tentative subdivision map hearings; to bring the appeal notice period into conformance with the state law; to add an appeal period for final maps; to substitute the County Surveyor for the Planning Commission as the appropriate approving authority for reversion to acreage maps; to permit administrative waivers to be applied for and approved to waive screening requirements for antennas; to clarify that junkyards also refers to salvage yards; to define the term slaughterhouse; to require nonconforming uses to conform to the provisions of this Chapter prior to the issuance of a ministerial permit or the effectuation of a discretionary permit; and providing other matters property relating thereto by amending the following articles: Article 100 "Introduction and Organization: Title and Contents," Article 302 "Allowed Uses," Article 306 "Accessory Uses and Structures," Article 310 "Temporary Uses and Structures," Article 404 "Lot Standards," Article 406 "Building Placement Standards," Article 410 "Parking and Loading," Article 606 "Parcel Maps," Article 608 "Tentative Subdivision Maps," Article 610 "Final Subdivision Maps," Article 612 "Division of Land into Large Parcels," Article 614 "Reversion to Acreage," Article 616 "Amendments of Map," Article 802 "Administrative Waivers," Article 902 "Definitions" and Article 904 "Nonconformance." Proposed April 12, 1994. Passed May 17, 1994. Effective May 31, 1994.

January 18, 1994 Revisions: (DCA93-4) BILL NO. 1068, ORDINANCE NO. 893. An ordinance amending the Washoe County Code to revise the regulations regarding the development, preservation and protection of hillsides and ridgelines and the definitions related thereto by amending the following articles: Article 424 "Hillside Development" and Article 902 "Definitions." Proposed December 14, 1993. Passed January 18, 1994. Effective March 4, 1994.

January 11, 1994 Revisions: (DCA93-7) BILL NO. 1070, ORDINANCE NO. 895. An ordinance amending the Washoe County Code to define nature center as a permitted use, to describe the appropriate level of review for nature centers, to identify the appropriate regulatory zones wherein nature centers can be permitted, to permit professional office uses in certain residential regulatory zones, and to describe the appropriate level of review for professional office uses in certain residential regulatory zones by amending the following articles: Article 302 "Allowed Uses" and Article 304 "Use Classification System." Proposed December 21, 1993. Passed January 11, 1994. Effective January 24, 1994.

November 16, 1993 Revisions: (DCA93-5) BILL NO. 1064, ORDINANCE NO. 889. An ordinance amending the Washoe County Code to identify the appropriate land uses in spheres of influence, to modify the regulation of storage of material in front and side areas of lots, to identify the appropriate land use designation for signs, and to identify nonconforming uses in spheres of influence by amending the following articles: Article 106 "Regulatory Zones"; Article 306 "Accessory Uses and Structures"; Article 502 "Sign Regulations"; and Article 904 "Nonconformance." Proposed October 26, 1993. Passed November 16, 1993. Effective November 29, 1993.

(DCA93-6) BILL NO. 1065, ORDINANCE NO. 890. An ordinance amending the Washoe County Code to revise the regulations regarding the location, installation, appearance and screening of antennas and the definitions related to antenna systems by amending the following articles and table: Article 324 "Antennas"; Table 110.302.05.01 "Table of Uses"; and Article 902 "Definitions." Proposed October 26, 1993. Passed November 16, 1993. Effective November 29, 1993.

July 20, 1993 Revisions: (DCA93-3) BILL NO. 1050, ORDINANCE NO. 875. An ordinance amending the Washoe County Code to substantially change the general mobile/manufactured home placement and design standards contained in Article 312 "Factory Built Housing" and the specific standards contained in Article 218 "Sun Valley Area" and Article 206 "High Desert Area," to correct procedural and typographical errors and to streamline and simplify permitting requirements of Chapter 110 (Development Code) by amending the following articles: Article 202 "Area Plan General Regulations"; Article 204 "Forest Area"; Article 206 "High Desert Area"; Article 208 "North Valleys Area"; Article 210 "South Valleys Area"; Article 214 "Southwest Truckee Meadows Area"; Article 216 "Spanish Springs Area"; Article 222 "Truckee Canyon Area"; Article 224 "Verdi Area"; Article 226 "Warm Springs Area"; Article 302 "Allowed Uses"; Article 304 "Use Classification System"; Article 306 "Accessory Uses and Structures"; Article 308 "Home Occupations"; Article 310 "Temporary Uses and Structures"; Article 312 "Factory Built Housing"; Article 314 "Manufactured Home Parks"; Article 316 "Recreational Vehicle Parks"; Article 320 "Bed and Breakfast Establishments"; Article 322 "Group Care Facilities"; Article 324 "Antennas"; and Article 334 "Mining." Proposed June 8, 1993. Passed July 20, 1993. Effective August 3, 1993.

June 22, 1993 Revisions: (DCA93-3) BILL NO. 1051, ORDINANCE NO. 876. An ordinance amending the Washoe County Code to eliminate the pervious surface coverage standards contained in Table 110.406.05.01, to correct procedural and typographical errors and to streamline and simplify permitting requirements of Chapter 110 (Development Code) by amending the following articles: Article 402 "Density/Intensity Standards"; Article 404 "Lot Standards"; Article 406 "Building Placement Standards"; Article 408 "Common Open Space Development"; Article 410 "Parking and Loading"; Article 416 "Flood Hazards"; Article 422 "Water and Sewer Resource Requirements"; Article 602 "General Subdivision Provisions"; Article 604 "Design Requirements"; Article 606 "Parcel Maps"; Article 608 "Tentative Subdivision Maps"; Article 610 "Final Subdivision Maps"; Article 612 "Division of Land into Large Parcels"; Article 614 "Reversion to Acreage"; Article 616 "Amendments of Map"; and Article 618" Boundary Line Adjustment." Proposed June 8, 1993. Passed June 22, 1993. Effective July 7, 1993.

May 25, 1993 Revisions: (DCA93-2) BILL NO. 1048, ORDINANCE NO. 873. An ordinance amending the Washoe County Code to correct procedural and typographical errors and to streamline and simplify permitting requirements of Chapter 110 (Development Code) by amending the following articles: Article 104 "County Growth Management System"; Article 106 "Regulatory Zones"; Article 702 "Adequate Public Facilities Management System"; Article 704 "Adequate Public Facilities: Sanitary Sewer"; Article 802 "Administrative Waivers"; Article 804 "Variances"; Article 806 "Vacations and Abandonments of Easements or Streets"; Article 808 "Administrative Permits"; Article 810 "Special Use Permits"; Article 812 "Projects of Regional Significance"; Article 814 "Development Agreements"; Article 816 "Specific Plans"; Article 818 "Amendment of Development Code"; Article 820 "Amendment of Comprehensive Plan"; Article 902 "Definitions"; and Article 916 "Establishment of Committees." Proposed May 11, 1993. Passed May 25, 1993. Effective June 7, 1993.

May 11, 1993 Revisions: (DCA93-3) BILL NO. 1049, ORDINANCE NO. 874. An emergency ordinance amending the Washoe County Code by amending provisions to Chapter 110 (Development Code) by deleting a portion of Article 312 "Factory-Built Housing," Section 110.312.10 "Development Standards"; specifically Section 110.312.10(d) "Parking," Section

110.312.10(f) "Foundation," and Section 110.312.10(g) "Roof." Proposed May 11, 1993. Passed May 11, 1993. Effective May 24, 1993.

February 9, 1993 Revisions: (DCA93-1) BILL NO. 1042, ORDINANCE NO. 867. An ordinance amending the Washoe County Code by adding provisions to Chapter 110 (Development Code) to incorporate Article 412 "Landscaping" into the Washoe County Development Code; modifying the language for Section 110.208.20 "North Valleys Area - Landscaping"; deleting Section 110.208.35 "North Valleys Area - Parking Lots and Other Paved Areas"; deleting Section 110.218.10 "Sun Valley Area - Commercial and Industrial Landscaping"; and amending Article 902 "Definitions" to incorporate new landscaping definitions. Proposed January, 19, 1993. Passed February 9, 1993. Effective May 27, 1993.

December 22, 1992 Adoption: BILL NO. 1040, ORDINANCE NO. 865. An ordinance amending the Washoe County Code by adding provisions (to be known as Chapter 110, Development Code) that replace Chapter 110 (Planning and Zoning); replace Chapter 115 (Subdivision of Land); replace Chapter 120 (Mobile Home Subdivision, Parks); replace the portion of Chapter 100 dealing with flood hazard reduction; and adding provisions that provide development regulations that vary by planning area; provide development regulations that vary by use; provide regulations for standards for development; provide requirements for adequate public facilities; and provides procedures for administrative permits, development agreements, specific plans, projects of regional significance, amendments to the Development Code, and amendments to the Washoe County Comprehensive Plan. Proposed December 8, 1992. Passed December 22, 1992. Effective May 26, 1993.

The following is a summary of the Washoe County Planning Commission recommendation for original adoption and revisions to the Washoe County Development Code:

Resolution No. 15-02: Recommend approval of DCA14-007 (Amend Article 821, Amendment of Regulatory Zone on February 3, 2015.

Resolution No. 14-21: Recommend approval of DCA14-010 (Amend Article 606, Parcel Maps; Article 608, Tentative Subdivision Maps; Article 804, Variances; Article 806, Vacations and Abandonments of Easements or Streets; Article 808, Administrative Permits; Article 810, Special Use Permits; Article 818, Amendment of Development Code; Article 912, Establishment of Commissions, Boards and Hearing Examiners; and Article 914, Establishment of Division) on November 13, 2014.

Resolution No. 14-16: Recommend approval of DCA14-006 (Amend Article 820, Amendment of Master Plan) on July 1, 2014.

Resolution No. 13-2: Recommend approval of DCA12-002 (Amend Article 226, Warm Springs Area and Article 302, Allowed Uses) on January 7, 2013. (Note: The Planning Commission adopted version was not the version subsequently adopted by the Board of County Commissioners in June 2013.)

Resolution No. 13-1: Recommend approval of DCA12-008 (Amend Article 304, Use Classification System and Article 902, Definitions) on January 7, 2013.

Resolution No. 12-11: Recommend approval of DCA12-005 (Amend Article 910, Enforcement) on August 21, 2012.

Resolution No. 12-10: Recommend approval of DCA12-004 (Amend Article 420, Storm Drainage Standards) on August 21, 2012.

Resolution No. 12-9: Recommend approval of DCA12-003 (Amend Article 438, Grading Standards) on August 21, 2012.

Resolution No. 12-8: Recommend approval of DCA12-006 (Amend Article 302, Allowed Uses; and Article 304, Use Classification System) on August 21, 2012.

Resolution No. 12-1: Recommend approval of DCA12-001 (Amend Article 302, Allowed Uses; and Article 304, Use Classification System) on May 1, 2012.

Resolution No. 11-15: Recommend approval of DCA11-003 (Amend Article 306, Accessory Uses and Structures) on November 1, 2011.

Resolution No. 11-14: Recommend approval of DCA11-001 (General Rural Residential renamed to General Rural Agricultural; modification to permitted and allowed uses) (Article 106, Master Plan Categories and Regulatory Zones; Article 226, Warm Springs Area; Article 302, Allowed Uses; Article 306, Accessory Uses and Structures; Article 326, Wind Machines; Article 406, Building Placement Standards; Article 502, Billboard Resolutions, and Article 504, Sign Regulations) on October 4, 2011.

Resolution No. 10-18: Recommend approval of DCA09-001 (Amend Article 416, Flood Hazards) on November 3, 2010.

Resolution No. 10-17: Recommend approval of DCA10-006 (Amend Article 406, Building Placement Standards) on October 5, 2010.

Resolution No. 10-15: Recommend approval of DCA10-001 (Amend Article 302, Allowed Uses; Article 304, Use Classification System; Article 306, Accessory Uses and Structures) on August 3, 2010.

Resolution No. 10-11: Recommend approval of DCA10-002 (Two Map) on May 20, 2010.

Resolution No. 10-7: Recommend approval of DCA08-009 (Amend Article 302, Allowed Uses; Article 304, Use Classification System; and Article 326, Wind Machines) on April 6, 2010.

Resolution No. 10-2: Recommend approval of DCA09-002 (Amend Article 302, Allowed Uses; Article 304, Table of Uses; and Article 410, Parking and Loading) on January 5, 2010.

Resolution No. 09-19: Recommend approval of DCA09-003 (Amend Article 324, Communication Facilities) on December 1, 2009.

Resolution No. 09-17: Recommend approval of DCA08-004 (Amend Article 420, Storm Drainage Standards) on November 3, 2009.

Resolution No. 09-10: Recommend approval of DC06-005 (Amend Article 306, Accessory Uses and Structures and Article 310, Temporary Uses and Structures) on May 5, 2009.

Resolution No. 08-12: Recommend approval of DCA08-002 (Amend Article 218, Sun Valley Area) on May 6, 2008; DCA08-003 (Amend Article 222, Truckee Canyon Area); DCA08-005 (Amend Article 206, High Desert Area; Article 210, South Valleys Area; Article 222, Truckee Canyon Area; Article 302, Allowed Uses; Article 306, Allowed Uses and Structure; Article 314, Manufactured Home Parks; Article 316, Recreational Vehicle Parks; Article 324, Communication Facilities; Article 332, Aggregate Facilities; Article 334, Mining; Article 418, Significant Hydrologic Resources; Article 436, Street Design; Article 504, Sign Regulations; and Article 810, Special Use Permits) on June 3, 2008.

Resolution No. 08-6: Recommend approval of DCA05-005 (Amend Article 302, Allowed Uses; and Article 304, Use Classification System) on April 1, 2008.

Resolution No. 08-4: Recommend approval of DCA08-001 (Amend Article 602, General Subdivision Provisions; Article 606, Parcel Maps; Article 608, Tentative Subdivision Map; Article 612, Division of Land into Large Parcels; and Article 618, Boundary Line Adjustments) on February 19, 2008.

Resolution No. 07-18: Recommend approval of DC06-004, DC07-010 and DC07-011 (Amend Article 100, Introduction and Organization: Title and Contents; Article 302, Allowed Uses; Article 304, Use Classification System; Article 306, Accessory Uses and Structures; Article 310, Temporary Uses and Structures; Article 312, Fabricated Housing; Article 322, Group Care Facilities; Article 606, Parcel Maps; Article 706, Impact Fees; Article 804, Variances; Article 806, Vacations and Abandonments of Easements or Streets; Article 808, Administrative Permits; Article 810, Special Use Permits; Article 820, Amendment of Comprehensive Plan; and Article 902, Definitions) on September 18, 2007.

Resolution No. 06-7.1: Recommend approval of DC06-003 (Amend Article 438, Grading Standards) on July 7, 2006.

Resolution No. 06-5: Recommend approval of DC06-001 (Amend Article 706, Impact Fees) on May 16, 2006.

Resolution No. 06-1: Recommended approval of DC03-007 (Amend Article 220, Tahoe Area; Article 406, Building Placement Standards; Article 902, Definitions) on November 15, 2005; and DC05-002 (Amend Article 106, Regulatory Zones; Article 216, Spanish Spring Area; Article 304, Use Classification System; Article 306, Accessory Uses and Structures; Division 5 Contents, Article 502, Off-Premise Sign Regulations; Article 504, On-Premise Sing Regulations; Article 606, Parcel Maps; Article 806, Vacations and Abandonments of Easements or Streets; Article 820, Amendment of Comprehensive Plan; Article 902, Definitions; Article 910, Enforcement; Article 912, Establishment of Commissions; Article 916, Establishment of Committees) on January 17, 2006.

Resolution No. 04-34: Recommended approval of DC04-007 (Amend Article 416, Flood Hazards) on November 16, 2004.

Resolution No. 04-17: Recommended approval of DC04-006 (Amend Section 110.330.45, 4H and Future Farmers of America Livestock Projects) on July 6, 2004.

Resolution No. 04-15: Recommended approval of DC03-011 (Amend Article 324, Communication Facilities) on March 16, 2004 and amended May 4, 2004.

Resolution No. 04-14: Recommended approval of DC04-005 (Amend Article 220, Tahoe Area) on May 4, 2004.

Resolution No. 04-12: Recommended approval of DC04-003 (Add Article 330, Domestic Pets and Livestock; and amend Article 300, Regulation of Uses: Title and Contents; Article 302, Allowed Uses, Article 304; Use Classification System; Article 306, Accessory Uses and Structures and Article 902, Definitions) on April 6, 2004.

Resolution No. 04-9: Recommended approval of DC04-001 (Add Article 438, Grading Standards; and amend Article 302, Allowed Uses, and Article 434; Regional Development Standards within Cooperative Planning Areas and all of Washoe County) and DC04-002 (Amend Article 104, County Growth Management System; Article 324, Communication Facilities; Article 414, Noise and Lighting Standards; Article 808, Administrative Permits; Article 810, Special Use Permits; Article 902, Definitions; Section 110.912.15, Hearing Examiner; and Article 914, Establishment of Department) on March 16, 2004.

Resolution No. 03-20: Recommended approval of DC03-008 (Amend Article 324, Communication Facilities; Article 604, Design Requirements; Article 608, Tentative Subdivision Maps; and Article 612, Division of Land into Large Parcels) on September 16, 2003.

Resolution No. 03-16: Recommended approval of DC03-010 (Amend Article 306, Accessory Uses and Structures) on September 2, 2003.

Resolution No. 03-14: Recommended approval of DC03-006 (Amend Article 504, On-Premise Sign Regulations) on July 15, 2003.

Resolution No. 03-4: Recommended approval of DC03-001 (Amend Article 434, Regional Development Standards within Cooperative Planning Areas and all of Washoe County) and DC03-002 (Amend Article 822, Provisions for Amendments to Local Master Plans and Zone Changes in Areas Subject to Cooperative Planning Under the Regional Plan Settlement Agreement) on January 27, 2003.

Resolution No. 02-19: Recommended approval of DC02-001 (Amend Article 502, Off-Premise Sign Regulations) on June 18, 2002 and September 17, 2002.

Resolution No. 02-16: Recommended approval of DC02-002 (Amend Article 412, Landscaping) and DC02-003 (Amend Article 302, Allowed Uses, and Article 304, Use Classification System) on August 20, 2002.

Resolution No. 02-3: Recommended approval of DC01-001 (Amend Article 212, Southeast Truckee Meadows Area) on August 21, 2001 and October 2, 2001; DC01-008 (Amend Article 502, Off-Premise Sign Regulations) on December 19, 2001; DC01-010 (Amend Article 814, Development Agreements and Article 816, Specific Plans) on January 15, 2002; and DC01-007 (Amend Article 304, Use Classification System; Article 606, Parcel Maps; Article 608, Tentative Subdivision Maps; Article 610, Final Subdivision Maps; Article 612, Division of Land into Large Parcels; Article 804, Variances; Article 806, Vacations and Abandonments of Easements or Streets; Article 810, Special Use Permits; Article 818, Amendment of Development Code; Article 820, Amendment of Comprehensive Plan; Article 902, Definitions; Article 912, Establishment of Commissions, Boards and Hearing Examiners; and Article 914, Establishment of Department) on January 15, 2002.

Resolution No. 01-26: Recommended approval of DC01-009 (Amend Article 818, Amendment of Development Code) on December 19, 2001.

Resolution No. 01-19: Recommended approval of DC01-003 (Amend Article 406, Building Placement Standards, and Article 902, Definitions) on October 16, 2001.

Resolution No. 01-16: Recommended approval of DC01-006 (Amend Article 906, Fees) on September 18, 2001.

Resolution No. 00-22: Recommended approval of DCA99-3 (Amend Article 418, Significant Hydrologic Resources and Article 902, Definitions) on August 15, 2000.

Resolution No. 00-26: Recommended approval of DC0009-001 (Amend Article 804, Variances) on October 17, 2000.

Resolution No. 00-20: Recommended approval of DCA99-7 (Amend Article 306, Accessory Uses and Structures and Article 902, Definitions) on December 16, 1999, March 23, 2000 and June 27, 2000.

Resolution No. 00-18: Recommended approval of DC0002-002 (Amend Article 302, Allowed Uses and Article 304, Use Classification System) and DC0005-001 (Amend Article 700, Infrastructure Availability and Financing: Title and Contents and Article 706, Impact Fees) on May 16, 2000.

Resolution No. 00-7: Recommended approval of DC0002-001 (Amend Article 416, Flood Hazards and Article 902, Definitions) on March 23, 2000.

Resolution No. 99-21: Recommended approval of DCA99-4 (Amend Article 106, Regulatory Zones; Article 304, Use Classification System; Article 306, Accessory Uses and Structures; Article 312, Fabricated Housing; Article 322, Group Care Facilities; Article 606, Parcel Maps; Article 608, Tentative Subdivision Maps; Article 610, Final Subdivision Maps; Article 612, Division of Land into Large Parcels; Article 614, Reversion to Acreage; Article 804, Variances; Article 808, Administrative Permits; Article 810, Special Use Permits; Article 814, Development Agreements; Article 818, Amendment of Development Code; Article 820, Amendment of Comprehensive Plan; Article 902, Definitions; and Article 916, Establishment of Committees) on October 28, 1999 and December 16, 1999.

Resolution No. 99-10: Recommended approval of DCA98-10 (Amend Article 226, Warm Springs Area and Article 902, Definitions) on July 20, 1999.

Resolution No. 99-6: Recommended approval of DCA98-8 (Amend Article 706, Impact Fees) and DCA99-1 (Amend Article 208, North Valleys Area) on April 20, 1999.

Resolution No. 99-5: Recommended approval of DCA98-11 (Amend Article 104, County Growth Management System, and Article 404, Lot Standards) on March 16, 1999.

Resolution No. 99-2: Recommended approval of DCA97-4A (Amend Article 436, Street Design Standards) on January 5, 1999.

Resolution No. 98-21: Recommended approval of DCA98-6 (Amend Article 410, Parking and Loading; Article 606, Parcel Maps; Article 608, Tentative Subdivision Maps; Article 610, Final Maps; Article 612, Division of Land into Large Parcels; Article 614, Reversion to Acreage; Article 616, Amendments of Map; Article 806, Vacations and Abandonments of Easements or Streets; and Article 814, Development Agreements) and DCA98-9 (Amend Article 210, South Valleys Area) on September 15, 1998.

Resolution No. 98-19: Recommended approval of DCA98-2 (Amend Article 216, Spanish Springs Area; Article 302, Allowed Uses; Article 308, Home Occupations; Article 804, Variances; Article 808, Administrative Permits; and Article 810, Special Use Permits) on June 16, 1998; and DCA96-6 (Add Article 332, Aggregate Facilities, and Amend Article 302, Allowed Uses, Article 304, Use Classification System; and Article 334, Mining) on July 21, 1998.

Resolution No. 98-18: Recommended approval of DCA98-4 (Amend Article 310, Temporary Uses and Structures) on June 16, 1998.

Resolution No. 98-3: Recommended approval of DCA97-6 (Add Article 504, On-Premise Sign Regulations) on January 20, 1998.

Resolution No. 98-11: Recommended approval of DCA98-3 (Amend Article 422, Water and Sewer Resource Requirements to exempt the Tahoe planning area from the requirements of the article) on April 21, 1998.

Resolution No. 98-8: Recommended approval of DCA97-4B (Amend Article 420, Storm Drainage Standards) and DCA97-7 (Amend Articles 106, 302, 304 to change the Office Commercial Regulatory Zone to Neighborhood Commercial/Office Regulatory Zone and expand it to include specific residential uses; renumbered Table 110.302.05.1 to Tables 110.302.05.1 through 110.302.05.5 and redefined some of the General Commercial uses; changed Article 406 to modify Table 110.406.05.1 for Neighborhood Commercial/Office, setback requirements; fence requirements for livestock, commercial and industrial, specialty fences, and entry gates and entry columns) on February 17, 1998.

Resolution No. 98-2: Recommended approval of DCA97-5 (Repeal Article 502, Sign Regulations and adopt a new Article 502, Off-Premise Sign Regulations) on January 20, 1998.

Resolution No. 98-10: Recommended approval of DCA98-1 (Amend Article 220, Tahoe Area to modify the Tahoe standards and change Section 110.226.05 reference to Pyramid Lake Highway) on February 17, 1998.

Resolution No. 97-15: Recommended approval of DCA97-3 (Amend Article 324, Antennas to include wireless communication facilities and rename the article to Communication Facilities) and DCA97-8 (Amend Article 222 to modify the Truckee Canyon standards) on November 18, 1997.

October 21, 1997: Took action consistent with NRS 278B to endorse the creation of an impact fee to finance and construct flood control and related facilities for the Southeast Truckee Meadows Specific Plan service area.

Resolution No. 97-5: Recommended approval of DCA97-2 (Amend Article 220, Tahoe Area to modify the Tahoe standards) on March 18, 1997.

Resolution No. 97-4: Recommended approval of DCA97-1 (Amend Article 106, Regulatory Zones to modify the transition process) on February 18, 1997.

Resolution No. 96-13: Recommended approval of DCA94-10 (Modify Article 308, Home Occupations, and add definition to Article 902, Definitions) on July 16, 1996.

Resolution No. 96-9: Recommended approval of DCA96-4 (Modify requirements for group care facilities, delete Article 802, Administrative Waivers, add provisions for Hearing Examiners to review variances, change Board of Adjustment term of office, and change membership requirements for Parcel Map Review Committee and Design Review Committee) on May 21, 1996.

Resolution No. 96-7: Recommended approval of DCA96-1 (Amend Sections 110.804.20 and 110.810.25 to eliminate posting requirements) and DCA96-3 (Amend Article 618, Boundary Line Adjustment to relocate substandard lots) on March 5, 1996.

Resolution No. 96-5: Recommended approval of DCA96-2 (Amend Article 208, North Valleys Area Public Services and Facilities Requirements) on February 20, 1996.

Resolution No. 95-5: Recommended approval of DCA94-4 (Add Article 432, Open Space Standards, and delete Scenic Roadway Corridor references in Division Two) on April 18, 1995.

Resolution No. 96-2: Recommended approval of DCA95-3 (Amend Articles 204 and 214 Mt. Rose Scenic Roadway Corridor) on October 17, 1995.

September 5, 1995: Took action consistent with NRS 278B to endorse the creation of a Regional Road Impact Fee proposed by the Regional Transportation Commission in cooperation with the City of Reno, City of Sparks and Washoe County to finance and construct a regional road system.

Resolution No. 95-4: Recommended approval of DCA95-1 (Accessory Buildings, Off-street Parking, Fence Heights and Setbacks) on March 21, 1995.

Resolution No. 94-27: Recommended approval of DCA94-11 (Readopt Article 306) on December 20, 1994.

Resolution No. 94-20.1: Recommended approval of DCA94-7 (Posting of Property), DCA94-8 (Washoe City Land Uses), and DCA94-9 (Flood Hazard Revisions) on November 15, 1994.

Resolution No. 94-19: Recommended approval of DCA94-5 (Article 206 - High Desert Area General Rural Standards) on October 1, 1994, and DCA94-6 (Lighting Standards) on November 1, 1994.

Resolution No. 94-7.1: Recommended approval of DCA94-4 (Development Standards and Design Guidelines) on July 19, 1994.

Resolution No. 94-3.1: Recommended approval of DCA94-3 (Planning Commission/Board of Adjustment Compensation) on May 3, 1994.

Resolution No. 94-2: Recommended approval of DCA94-1 (Slaughterhouses, etc.) on March 15, 1994.

Resolution No. 93-22: Recommended approval of DCA93-7 (Modifies Use Classifications--Nature Center and Professional Offices) on November 4, 1993.

Resolution No. 93-21: Recommended approval of DCA93-5 (Land Use in Sphere of Influence, Outdoor Storage, etc.) on August 17, 1993 and September 7, 1993, and DCA93-6 (Antenna Ordinance Revisions) on October 5, 1993.

Resolution No. 93-20: Recommended approval of DCA93-4 (Hillside Ordinance Addition) on September 7, 1993.

Resolution No. 93-16: Recommended approval of DCA93-3 (Major Revisions to Divisions 2, 3, 4, and 6) on June 1, 1993.

Resolution No. 93-15: Recommended approval of DCA93-2 (Major Revisions to Divisions 1, 7, 8 and 9) on April 26, 1993.

Resolution No. 93-1: Recommended approval of DCA93-1 (Landscape Ordinance Addition) on January 5, 1993.

Original Adoption: Washoe County Planning Commission Chairman forwards draft Washoe County Development Code to Washoe County Commission by letter dated November 17, 1992.

Division One - Introduction and Organization
CONTENTS

	Page
Introduction and Organization: Title and Contents	100-1
State and Regional Regulatory System	102-1
County Growth Management System	104-1
Master Plan Categories and Regulatory Zones	106-1

LIST OF TABLES

Table 110.106.05.1: Table of Master Plan Categories and Allowed Regulatory Zones	106-2
Table 110.106.30.1: Table of Comparable Regulatory Zones and Pre-1993 Zoning Ordinance Districts	106-13

Article 100
INTRODUCTION AND ORGANIZATION: TITLE AND CONTENTS

Sections:

110.100.00	**Title**
110.100.05	**Applicability**
110.100.10	**Infrastructure**
110.100.15	**Conformance with Plan**
110.100.20	**References**
110.100.25	**Common Definitions**
110.100.30	**Contents**
110.100.35	**Acceptance of Applications**

Section 110.100.00 Title. Chapter 110 of the Washoe County Code is entitled Development Code. Division One of Chapter 110 is entitled Introduction and Organization.

Section 110.100.05 Applicability. All development and subdivision of land within the unincorporated area of Washoe County shall be subject to the provisions of the Development Code. Any use not specifically enumerated as permitted in a regulatory zone pursuant to the Development Code, or interpreted by the Director of Community Development as permitted in a regulatory zone pursuant to Section 110.304.10, Authority and Responsibility, shall be considered to be prohibited in any regulatory zone for which the use is not enumerated.

[Amended by Ord. 899, provisions eff. 5/31/94.]

Section 110.100.10 Infrastructure. The provision of infrastructure to support and service development is subject to the provisions of the Development Code and the Capital Improvements Program.

Section 110.100.15 Conformance with Plan. Pursuant to NRS 278, any action of the County relating to development, zoning, the subdivision of land, or capital improvements must conform to the Washoe County Master Plan.

[Amended by Ord. 1447, provisions eff. 9/9/10.]

Section 110.100.20 References. Unless otherwise indicated, all references to articles or sections are to articles or sections in Chapter 110.

Section 110.100.25 Common Definitions. Unless otherwise provided, common definitions shall be used throughout the Development Code. Definitions are contained in Article 902.

Section 110.100.30 Contents. Division One consists of the following articles:

(a) ARTICLE 100 INTRODUCTION AND ORGANIZATION: TITLE AND CONTENTS

(b) ARTICLE 102 STATE AND REGIONAL REGULATORY SYSTEM

(c) ARTICLE 104 COUNTY GROWTH MANAGEMENT SYSTEM

(d) ARTICLE 106 MASTER PLAN CATEGORIES AND REGULATORY ZONES

[Amended by Ord. 1447, provisions eff. 9/9/10.]

Section 110.100.35 Acceptance of Applications. All applications authorized by this chapter and the accompanying filing fee shall be returned to an applicant upon a finding that the application is incomplete. Return of the application due to its being incomplete shall cease all further processing of the application and shall require a new application and accompanying filing fee to be submitted pursuant to the application dates established by the Department of Community Development. The following procedures shall be followed:

(a) A determination that an application is incomplete shall be made within three (3) working days after the final date on which an application may be submitted.

(b) If an application is deemed incomplete, a statement describing the information required to make the application complete shall accompany the return of the application and any accompanying filing fee. Upon request of the applicant, the statement will include an explanation as to why the information is required.

[Added by Ord. 1347, provisions eff. 11/2/07].

Article 102
STATE AND REGIONAL REGULATORY SYSTEM

Sections:

110.102.00	**Purpose**
110.102.05	**State of Nevada**
110.102.10	**Tahoe Regional Planning Agency**
110.102.15	**Lake Tahoe Regional Plan**
110.102.20	**Truckee Meadows Regional Planning Agency**
110.102.25	**Truckee Meadows Regional Plan**

Section 110.102.00 Purpose. The purpose of this article, Article 102, State and Regional Regulatory System, is to describe, for the convenience of the user of the Development Code, the state and regional framework of the land development system that applies to Washoe County. The legal authority of the state and regional agencies is contained in the Nevada Revised Statutes.

Section 110.102.05 State of Nevada. The authority for Washoe County to control land use and development comes from the State of Nevada as expressed in the Nevada Revised Statutes (NRS). In addition, the State of Nevada established or participated in establishing two regional agencies that affect the ability of Washoe County to control land use and development. These regional agencies are described in Section 110.102.10 and Section 110.102.20 of this article.

Section 110.102.10 Tahoe Regional Planning Agency. The Tahoe Regional Planning Agency (TRPA) was created by the States of Nevada and California to protect the waters of Lake Tahoe.

(a) TRPA Governing Board. The Tahoe Regional Planning Agency Governing Board governs the Tahoe Regional Planning Agency. It has fourteen (14) members, one of whom is appointed by the Washoe County Board of County Commissioners.

(b) Advisory Planning Commission. The Tahoe Advisory Planning Commission advises the Governing Board. The Washoe County Director of Community Development is a member of the Advisory Planning Commission.

Section 110.102.15 Lake Tahoe Regional Plan. The Regional Plan for the Lake Tahoe Basin has been adopted by the Governing Board of the Tahoe Regional Planning Agency pursuant to NRS 277. The Regional Plan for the Lake Tahoe Basin consists of several documents, the central one being the Regional Goals and Policies Plan. The Code of Ordinances implements the policies set forth in the Regional Goals and Policies Plan by regulating land development within the Tahoe Basin. If there is a conflict within the Tahoe Basin between County regulations and those of the Tahoe Regional Planning Agency, the most restrictive shall apply pursuant to NRS 277, with the exception of determining building height. Due to the unique topography in the Tahoe Basin, the most recent version of Tahoe Regional Planning Agency Ordinance, Chapter 22, Height Standards, shall be used to regulate building height in the Tahoe Basin. The Plan Area Statements and the Scenic Quality Improvement Program also provide policies and

regulations referenced by the Tahoe Regional Planning Agency. The area subject to the jurisdiction of the Tahoe Regional Planning Agency is the same as that subject to the Tahoe Area Plan, a part of the Washoe County Master Plan.

[Amended by Ord. 1447, provisions eff. 9/9/10.]

Section 110.102.20 Truckee Meadows Regional Planning Agency. The Truckee Meadows Regional Planning Agency was created by the State of Nevada to provide comprehensive planning for the entire area within the boundaries of Washoe County except for the Lake Tahoe Basin. All incorporated cities within the County boundaries, except within the Tahoe Basin, are also subject to the jurisdiction of the Regional Planning Agency.

(a) Regional Planning Governing Board. The Truckee Meadows Regional Planning Governing Board governs the Truckee Meadows Regional Planning Agency. It appoints the Executive Director of the Regional Planning Agency and may appoint advisory committees. Three members of the Regional Planning Governing Board are appointed by the Washoe County Board of County Commissioners.

(b) Regional Planning Commission. The Truckee Meadows Regional Planning Commission has the responsibility of developing the Truckee Meadows Regional Plan, reviewing the County Master Plan for conformity to the Regional Plan, and approving projects of regional significance. Three members of the Regional Planning Commission are also members of the Washoe County Planning Commission.

[Amended by Ord. 1447, provisions eff. 9/9/10.]

Section 110.102.25 Truckee Meadows Regional Plan. The Truckee Meadows Regional Plan has been adopted by the Governing Board of the Truckee Meadows Regional Planning Agency pursuant to NRS 278. This plan covers Washoe County, except for the Lake Tahoe Basin, and the Cities of Reno and Sparks. The Truckee Meadows Regional Plan provides a policy guide and planning basis for land use planning, service provision, and capital investment decisions. The Washoe County Master Plan, excluding those portions of the Master Plan applicable only to the Tahoe Basin, and projects of regional significance must conform to the Truckee Meadows Regional Plan.

[Amended by Ord. 1447, provisions eff. 9/9/10.]

Article 104
COUNTY GROWTH MANAGEMENT SYSTEM

Sections:

110.104.00	**Purpose**
110.104.05	**Washoe County Board of County Commissioners**
110.104.10	**Washoe County Planning Commission**
110.104.15	**Washoe County Board of Adjustment**
110.104.20	**Washoe County Master Plan**
110.104.25	**Washoe County Capital Improvements Program**
110.104.30	**Washoe County Development Code**
110.104.35	**Washoe County Departments**
110.104.40	**Other Agencies**

Section 110.104.00 Purpose. The purpose of this article, Article 104, County Growth Management System, is to describe the Washoe County system for ensuring that growth occurs in a responsible manner in order to protect the health, safety, and welfare of the County and its residents.

Section 110.104.05 Washoe County Board of County Commissioners. The Washoe County Board of County Commissioners is responsible for overall governance of the County. It is authorized to appoint members to entities such as the Tahoe Regional Planning Agency Governing Board, Truckee Meadows Regional Planning Governing Board, Washoe County Planning Commission, and Washoe County Board of Adjustment. The Board of County Commissioners adopts the Master Plan, Capital Improvements Program, and Development Code. It acts as an appeal body from decisions of the Planning Commission and the Board of Adjustment, and exercises other responsibilities as set forth in this Development Code.

[Amended by Ord. 1447, provisions eff. 9/9/10.]

Section 110.104.10 Washoe County Planning Commission. The Washoe County Planning Commission acts as an advisory body to the Board of County Commissioners in such areas as adoption of the Master Plan, Capital Improvements Program, Development Code, and Regulatory Zone map amendments. The Planning Commission makes decisions on Special Use Permits, approves tentative subdivision maps, and exercises other responsibilities as set forth in this Development Code. The Planning Commission is established by Article 912, Establishment of Commissions, Boards and Hearing Examiners.

[Amended by Ord. 1447, provisions eff. 9/9/10.]

Section 110.104.15 Washoe County Board of Adjustment. The Washoe County Board of Adjustment acts as an appeal body for all decisions rendered by an appointed official that relate to the use of land and structures, and exercises other responsibilities as set forth in this Development Code. The Board of Adjustment is established by Article 912, Establishment of Commissions, Boards and Hearing Examiners.

[Amended by Ord. 1447, provisions eff. 9/9/10.]

Section 110.104.20 Washoe County Master Plan. The Washoe County Master Plan is the first major element of the County's Growth Management System. The Master Plan has been adopted by the Washoe County Board of County Commissioners pursuant to NRS 278. This plan covers the entire unincorporated area of Washoe County and includes both elements and area plans. The Master Plan is required to be in conformance with the Truckee Meadows Regional Plan for all areas except the Lake Tahoe Basin, and the Tahoe Regional Plan for the Lake Tahoe Basin. The purpose of the Master Plan is to conserve and promote the public health, safety and general welfare of residents of Washoe County. The Washoe County Master Plan maps are a component of each Area Plan of Volume Two of the Washoe County Master Plan, and cover the planning area depicted in each Area Plan. These maps establish the Master Plan categories applicable to all properties located within the unincorporated area of Washoe County and are the basis for desired patterns of community design and physical development. All regulatory zones, and the certified Washoe County Regulatory Zone map on file in the Department of Community Development, must be consistent with the Master Plan categories depicted on the Washoe County Master Plan maps. A proposal to amend a Washoe County Master Plan map shall constitute an amendment to the applicable Area Plan and shall be processed in accordance with Article 820, Amendment of Master Plan.

[Amended by Ord. 873, provisions eff. 6/7/93; Ord. 1447, provisions eff. 9/9/10.]

Section 110.104.25 Washoe County Capital Improvements Program. The Washoe County Capital Improvements Program is the second major element of the County's Growth Management System. The Capital Improvements Program has been adopted by the Washoe County Board of County Commissioners pursuant to NRS 278B. It determines the timing for public services and facilities that will help implement the Master Plan. The Capital Improvements Program is updated and adopted annually. It serves as the preliminary capital budget for the first year following adoption and as a policy document for the following five (5) years. The Capital Improvements Program must conform to the Master Plan pursuant to NRS 278.

[Amended by Ord. 1447, provisions eff. 9/9/10.]

Section 110.104.30 Washoe County Development Code. The Washoe County Development Code is the third major element in the County's Growth Management System. The Development Code has been adopted by the Washoe County Board of County Commissioners pursuant to NRS 278 and 278A. The Development Code regulates the subdivision and development of land, and the use of land and structures. The Development Code must conform to the Master Plan pursuant to NRS 278.

[Amended by Ord. 873, provisions eff. 6/7/93; Ord. 1065, provisions eff. 7/1/99; Ord. 1447, provisions eff. 9/9/10..]

Section 110.104.35 Washoe County Departments.

(a) Department of Community Development. The Washoe County Department of Community Development is responsible for preparing and updating the Master Plan, including all area plans and elements, maintaining and administering the Development Code and issuing other permits. Hearing examiners may be appointed to assist in administering the Development Code. The Department of Community Development is established by Article 914, Establishment of Department.

(b) Department of Public Works. The Washoe County Department of Public Works is responsible for managing divisions dealing with engineering and roads. The Department of Public Works is established by Chapter 80 of the Washoe County Code.

(c) Department of Water Resources. The Washoe County Department of Water Resources is responsible for managing divisions dealing with the resource planning and management, and operation of water resources, including, but not limited to, water, sewer, flood control and drainage. The Department of Water Resources is established by Chapter 40 of the Washoe County Code.

[Amended by Ord. 1234, provisions eff. 5/21/04; Ord. 1447, provisions eff. 9/9/10..]

Section 110.104.40 Other Agencies.

(a) District Health Department. The Washoe County District Health Department, which has its own governing board, enforces regulations on subjects such as solid and hazardous waste, wastewater, safe drinking water, and air quality. The District Health Department is established by NRS 439 and by an interlocal agreement.

(b) Regional Transportation Commission. The Regional Transportation Commission is the designated Metropolitan Planning Organization (MPO) and is responsible for regional transportation planning such as developing standards for arterial roads, and operating transit service. The Regional Transportation Commission is established by NRS 373.

(c) Park Commission. The Washoe County Park Commission is the designated appointed body for review of park and recreation plans for the unincorporated portion of Washoe County. The Park Commission is a recommending body to the Board of County Commissioners. The Park Commission is established by NRS 244. For the purpose of this Development Code, the Park Commission is authorized to approve discretionary permits for Active Recreation Uses, provided that its noticing and meeting procedures are equal to, or exceed, the minimum requirements enumerated in this Development Code for the issuance of said permit.

[Amended by Ord. 873, provisions eff. 6/7/93.]

Article 106
MASTER PLAN CATEGORIES AND REGULATORY ZONES

[This Article amended in its entirety by Ord. 1447, provisions eff. 9/9/10.]

Sections:

110.106.00	**Purpose**
110.106.05	**Establishment of Master Plan Categories and Regulatory Zones**
110.106.10	**Master Plan Categories**
110.106.15	**Regulatory Zones**
110.106.20	**Common Development Standards For Residential Regulatory Zones**
110.106.25	**Common Development Standards For Non-Residential Regulatory Zones**
110.106.30	**Use of Land within Spheres of Influence**

Section 110.106.00 Purpose. The purpose of this article, Article 106, Master Plan Categories and Regulatory Zones, is to provide general descriptions of the Master Plan categories and Regulatory Zones of this Development Code, and the nature of uses therein.

Section 110.106.05 Establishment of Master Plan Categories and Regulatory Zones. The Master Plan categories and Regulatory Zones described in Section 110.106.10 through Section 110.106.30 are hereby established. Table 110.106.05.1 shows the range of Regulatory Zones allowed within each Master Plan category. Through the identification of Character Management Areas, individual Area Plans may further restrict or modify the range of Regulatory Zones allowed in a Master Plan category. The community vision articulated in each area plan shall be a guide to the application of Master Plan categories in each planning area. From time to time and in order to implement a community's Area Plan, Master Plan categories may be applied to parcels with existing zoning that is inconsistent with the new Master Plan category. In no case shall a Regulatory Zone be applied to a parcel if that parcel's Master Plan category is inconsistent with the new Regulatory Zone.

(a) Master Plan and Regulatory Zone Maps. The Regulatory Zones implement and are consistent with the Master Plan categories as shown on the Washoe County Master Plan maps included within each Area Plan of Volume Two of the Washoe County Master Plan. An amendment to a Master Plan map is an amendment to the Area Plan and shall be processed in accordance with the provisions of Division Eight, Article 820, Amendment of Master Plan, of the Washoe County Development Code. An official certified copy of the Washoe County Regulatory Zone map, otherwise known as the "zoning map," is kept and maintained by the Washoe County Department of Community Development. An amendment to the Regulatory Zone map is processed in accordance with the provisions of Division Eight, Article 821, Amendment of Regulatory Zone, of the Washoe County Development Code.

(b) Interpretation of Boundaries. When uncertainty exists as to the boundaries of either the Master Plan categories or the Regulatory Zones, the following rules shall apply in the order listed:

(1) Boundaries shown as following or approximately following any street shall be construed as following the centerline of the dedicated right-of-way;

(2) Boundaries shown as following or approximately following any lot line or other property line shall be construed as following such line;

(3) Boundaries shown as following or approximately following sections lines, half-section lines, or quarter-section lines shall be construed as following such lines; and

(4) Boundaries shown as following or approximately following natural features shall be construed as following such features.

(c) Further Uncertainties. In the event of further uncertainty as to the boundaries of a Regulatory Zone, the Director of Community Development shall make an interpretation. In addition, at the discretion of the Director of Community Development, all map interpretations, including minor technical clarifications that reflect prior Board of County Commission actions, shall be shown on adopted Land Use Plan maps.

Table 110.106.05.1

TABLE OF MASTER PLAN CATEGORIES AND ALLOWED REGULATORY ZONES

Master Plan Category	Regulatory Zones Allowed
Rural	• General Rural • General Rural Agricultural • Public and Semi-Public Facilities • Parks and Recreation • Specific Plan • Open Space
Rural Residential	• Low Density Rural • Medium Density Rural • High Density Rural • Public and Semi-Public Facilities • Specific Plan • Parks and Recreation • Open Space
Suburban Residential	• Low Density Suburban • Low Density Suburban Two • Medium Density Suburban • Medium Density Suburban Four • High Density Suburban • Public and Semi-Public Facilities • Specific Plan • Parks and Recreation • Open Space

Table 110.106.05.1 (continued)

TABLE OF MASTER PLAN CATEGORIES AND ALLOWED REGULATORY ZONES

Master Plan Category	Regulatory Zones Allowed
Urban Residential	• Low Density Urban • Medium Density Urban • High Density Urban • Public and Semi-Public Facilities • Specific Plan • Parks and Recreation • Open Space
Commercial	• Neighborhood Commercial/Office • General Commercial • Tourist Commercial • Public and Semi-Public Facilities • Specific Plan • Parks and Recreation • Open Space
Industrial	• Industrial • Public and Semi-Public Facilities • Specific Plan • Parks and Recreation • Open Space
Open Space	• Open Space • Public and Semi-Public Facilities • Parks and Recreation

[Article amended in its entirety by Ord. 1447, provisions eff. 9/9/10. Amended by Ord. 1475, provisions eff. 1/12/12.]

Section 110.106.10 Master Plan Categories.

(a) Rural. The Rural Master Plan category is intended for areas of the County that are remote, have minimal infrastructure, contain significant amounts of open spaces, and which are suitable for commercial agricultural and grazing uses, extraction industries, natural resource conservation, energy production, rural commerce, and large lot residential uses. A residential density of one (1) dwelling unit per forty (40) acres and greater is typical within the Rural Master Plan category. The following Regulatory Zones are allowed in and are consistent with the Rural Master Plan category: General Rural, General Rural Agricultural, Public and Semi-Public Facilities, Specific Plan, Parks and Recreation, and Open Space.

(b) Rural Residential. The Rural Residential Master Plan category is intended primarily for larger lot residential uses, small scale agricultural uses, natural resource conservation, and rural commerce, with allowed densities ranging from one (1) dwelling unit per forty (40) acres up to one (1) dwelling unit per five (5) acres. A density of one (1) dwelling unit per two and a half (2.5) acres is allowed within the Rural Residential category provided the property is within the Truckee Meadows Services Area, as amended. Divisions of land and the provision of

services outside the Truckee Meadows Services Area, as defined in the Truckee Meadows Regional Plan, must be consistent with the provisions of that plan. The following Regulatory Zones are allowed in and are consistent with the Rural Residential Master Plan category: Low Density Rural, Medium Density Rural, High Density Rural, Public and Semi-Public Facilities, Specific Plan, Parks and Recreation, and Open Space.

(c) Suburban Residential. The Suburban Residential Master Plan category is intended primarily for residential uses of low to medium densities. Supporting neighborhood scale commercial uses and mixed use village center development is allowed with approval of a discretionary permit. The following Regulatory Zones are allowed in and are consistent with the Suburban Residential Master Plan category: Low Density Suburban One, Low Density Suburban Two, Medium Density Suburban, Medium Density Suburban Four, High Density Suburban, Public and Semi-Public Facilities, Specific Plan, Parks and Recreation, and Open Space.

(d) Urban Residential. The Urban Residential Master Plan category is intended primarily for higher density residential areas, mixed-use village centers, and secondary transit corridors. A more extensive mix of residential, commercial, and employment opportunities is encouraged in the Urban Master Plan category. The following Regulatory Zones are allowed in and are consistent with the Urban Residential Master Plan category: Low Density Urban, Medium Density Urban, High Density Urban, Public and Semi-Public Facilities, Specific Plan, Parks and Recreation, and Open Space.

(e) Commercial. The Commercial Master Plan category is primarily intended to create and preserve areas for businesses that provide a variety of wholesale and retail goods and services, serve a neighborhood or community market, and which are created in conjunction with residential uses to create a mixed-use community. Commercial uses may include wholesale and retail stores, shopping centers, specialty shops, tourism, gaming, personal services and automobile services, offices, restaurants, theaters and other compatible activities that serve a neighborhood or community area. Strip commercial development is strongly discouraged unless the development is part of a mixed-use area, transit-oriented corridor (or similar district), and designed for pedestrian use. Business parks containing professional, medical, educational, financial and insurance services and supportive commercial activities are also appropriate under this category. The following Regulatory Zones are allowed in and are consistent with the Commercial Master Plan category: Neighborhood Commercial/Office, General Commercial, Tourist Commercial, Public and Semi-Public Facilities, Specific Plan, Parks and Recreation, and Open Space.

(f) Industrial. The Industrial Master Plan category is intended to provide for industrial uses of all types such as manufacturing, warehousing, mining and construction. The Industrial category is intended to create an environment in which industrial operations may be conducted with minimal impact on the natural environment and surrounding land uses. The following Regulatory Zones are allowed in and are consistent with the Industrial Master Plan category: Industrial, Public and Semi-Public Facilities, Specific Plan, Parks and Recreation, and Open Space.

(g) Open Space. The Open Space Master Plan category is intended to create, preserve, and connect areas of natural, cultural, and scenic resources, including

but not limited to, ridges, stream corridors, natural shoreline, scenic views, agricultural, or other land devoted exclusively to open space uses. The following Regulatory Zones are allowed in and are consistent with the Open Space Master Plan category: Open Space, Public and Semi-Public Facilities, and Parks and Recreation.

[Article amended in its entirety by Ord. 1447, provisions eff. 9/9/10. Amended by Ord. 1475, provisions eff. 1/12/12.]

Section 110.106.15 Regulatory Zones.

(a) General Rural Regulatory Zone. The General Rural (GR) Regulatory Zone is intended to identify areas that are:

(1) Remote and will have no or very low density development (i.e. one (1) dwelling unit per forty (40) acres),

(2) Remote but where unique developments may occur (e.g. destination resorts).

(3) Suitable for more intensive resource extraction, including energy production, and

(4) Suitable for large scale agricultural and/or grazing operations. This regulatory zone identifies areas that may have one or more of the following characteristics:

(i) Floodplains. The parcel or area is within the 100-year floodplain identified on the Federal Emergency Management Agency (FEMA) Flood Insurance Rate Maps (FIRM) or other potential floodplain areas identified by the Washoe County Department of Public Works.

(ii) Potential Wetlands. The parcel or area is within a "potential wetland area" as identified by the U.S. Army Corps of Engineers (COE) or other potential wetland areas identified by the Washoe County Department of Community Development and the Washoe County Department of Public Works.

(iii) Slopes. The parcel or area has moderate slopes (between fifteen (15) and thirty (30) percent) or steep slopes (thirty (30) percent or steeper) based on the best available topographic information.

(iv) Public Ownership. The parcel or area is under public ownership.

(v) Remote Location Lacking Infrastructure. The parcel or area is in a remote location that does not have public infrastructure adjacent to or near the site.

(vi) Agriculture and Grazing. The parcel or area is actively engaged in agricultural production or livestock grazing.

(vii) Resource Extraction and Energy Production. The parcel or area is suitable for, or is currently engaged in, resource extraction related uses or energy production.

(viii) Conservation of Natural Resources and Open Space. The parcel or area has unique natural resources, scenic quality, habitat value, or open spaces.

(b) General Rural Agricultural Regulatory Zone. The General Rural Agricultural (GRA) Regulatory Zone is intended to preserve areas where large lot residential uses, open space, agricultural and grazing uses predominate. Mining, natural resource extraction, and other similar uses are not allowed in the GRA Regulatory Zone to avoid incompatibility with the desired large lot rural, agricultural character. Single-family dwellings and associated accessory uses located on lots forty (40) acres in size or larger, with limited public services and facilities, is the desired land use pattern in the GRA Regulatory Zone. The maximum number of primary dwelling units that may be located in the GRA Regulatory Zone is one (1) unit per forty (40) acres. The minimum lot area in the GRA Regulatory Zone is forty (40) acres.

(c) Low Density Rural Regulatory Zone. The Low Density Rural (LDR) Regulatory Zone is designed to preserve areas where agriculture, grazing, and/or open space predominate. Single-family, detached dwellings are permitted on large lots; single-family dwellings may be clustered to retain open space and agricultural uses. The maximum number of dwelling units that may be located in this regulatory zone is one (1) unit per ten (10) acres. The minimum lot area in this regulatory zone is eight (8) acres.

(d) Medium Density Rural Regulatory Zone. The Medium Density Rural (MDR) Regulatory Zone is intended to preserve areas where agriculture, grazing and/or open space predominate. Single-family, detached residences in this area are generally on five (5)-acre lots and have limited public services and facilities available. Multi-family residences are not appropriate, but single-family homes may be clustered to retain open space and agricultural uses. The maximum number of dwelling units that may be located in this regulatory zone is one (1) unit per five (5) acres. The minimum lot area in this regulatory zone is four (4) acres.

(e) High Density Rural Regulatory Zone. The High Density Rural (HDR) Regulatory Zone is intended to preserve and create areas of single-family, detached dwellings in a semi-rural setting. Livestock grazing and agricultural activities are common secondary uses.

(f) Low Density Suburban Regulatory Zone. The Low Density Suburban (LDS) Regulatory Zone is intended to create and preserve areas where single-family, detached homes on one (1) acre lots are predominant. Small neighborhood commercial uses may be permitted when they serve the needs of residents and are compatible with the residential character of the area. The maximum number of dwelling units that may be located in this regulatory zone is one (1) unit per one (1) acre. The minimum lot area in this regulatory zone is thirty-five thousand (35,000) square feet.

(g) Low Density Suburban Two Regulatory Zone. The Low Density Suburban Two (LDS 2) Regulatory Zone is intended to create and preserve areas where single-

family, detached homes on half-acre lots are predominant. Small neighborhood commercial uses may be permitted when they serve the needs of residents and are compatible with the residential character of the area. The maximum number of dwelling units that may be located in this regulatory zone is two units per one (1) acre. The minimum lot area in this regulatory zone is seventeen thousand five-hundred (17,500) square feet.

(h) Medium Density Suburban Regulatory Zone. The Medium Density Suburban (MDS) Regulatory Zone is intended to create and preserve areas where the predominant dwelling type is single-family, detached units at three (3) units per acre. Small neighborhood commercial and civic uses may be permitted when they serve the needs of the residents and are compatible with the residential character of the area. The maximum number of dwelling units that may be located in this regulatory zone is three (3) units per one (1) acre. The minimum lot area in this regulatory zone is twelve thousand (12,000) square feet.

(i) Medium Density Suburban Four Regulatory Zone. The Medium Density Suburban Four (MDS 4) Regulatory Zone is intended to create and preserve areas where the predominant dwelling type is single-family, detached units at four (4) units per acre. Small neighborhood commercial and civic uses may be permitted when they serve the needs of the residents and are compatible with the residential character of the area. The maximum number of dwelling units that may be located in this regulatory zone is four (4) units per one (1) acre. The minimum lot area in this regulatory zone is nine thousand (9,000) square feet.

(j) High Density Suburban Regulatory Zone. The High Density Suburban (HDS) Regulatory Zone is intended to create and preserve neighborhoods where the predominant housing type is single-family, detached units at seven (7) units per acre. Attached single-family units are also permitted at nine (9) units per acre, subject to special review. Small neighborhood commercial and civic uses may be permitted when they serve the needs of the residents and are compatible with the residential character of the area. The maximum number of dwelling units that may be located in this regulatory zone is seven (7) units per one (1) acre for single-family detached; and nine (9) units per one (1) acre for attached single family and mobile home parks. The minimum lot area in this regulatory zone is five thousand (5,000) square feet.

(k) Low Density Urban Regulatory Zone. The Low Density Urban (LDU) Regulatory Zone is intended to create and preserve areas where single-family dwellings (at ten (10) units per acre) and multi-family dwellings (at fourteen (14) units per acre) are located. Some commercial, professional and civic uses may be permitted when they serve the needs of local residents and are compatible with the residential environment. The maximum number of dwelling units that may be located in this regulatory zone is ten (10) units per one (1) acre for single-family; fourteen (14) units per one (1) acre for multi-family; and twelve (12) units per one (1) acre for mobile home parks. The minimum lot area in this regulatory zone is eight thousand (8,000) square feet, with two (2) dwelling units (attached) per lot. The minimum lot area for an individual dwelling unit in this regulatory zone is three thousand seven hundred (3,700) square feet.

(l) Medium Density Urban Regulatory Zone. The Medium Density Urban (MDU) Regulatory Zone creates and preserves areas where the predominant housing type is multi-family dwellings at twenty-one (21) units per acre. In Medium Density Urban areas, commercial, professional, and civic uses are permitted

when they serve the needs of the local residents and are compatible with the residential environment. The maximum number of dwelling units that may be located in this regulatory zone is twenty-one (21) units per one (1) acre. The minimum lot area in this regulatory zone is eight thousand (8,000) square feet, with four (4) multi-family units per lot. The minimum lot area for an individual dwelling unit in this regulatory zone is three thousand seven hundred (3,700) square feet.

(m) High Density Urban Regulatory Zone. The High Density Urban (HDU) Regulatory Zone is intended to create and preserve areas where multi-family dwellings at forty-two (42) units per acre are predominant. In High Density Urban areas, commercial, professional, and civic uses are permitted when they serve the needs of local residents and are compatible with the residential environment. The maximum number of dwelling units that may be located in this regulatory zone is forty-two (42) units per one (1) acre. The minimum lot area in this regulatory zone is eight thousand (8,000) square feet with eight (8) multi-family units allowed per lot. The minimum lot area for an individual dwelling unit in this regulatory zone is three thousand seven hundred (3,700) square feet.

(n) Open Space Regulatory Zone. The Open Space (OS) Regulatory Zone is intended to create and protect areas of natural, cultural and scenic resources, including but not limited to, ridges, stream corridors, natural shoreline, scenic views, wetlands, agricultural, or other land devoted exclusively to open-space uses that are owned, controlled, or leased by public or non-profit agencies. The Open Space Regulatory Zone may also be applied to common open space areas created through the common open space development process set forth in Article 408, Common Open Space Development. There is no minimum lot area for this regulatory zone. Uses compatible with the Open Space Regulatory Zone category include:

(1) Natural and Scenic Resource Preservation. The preservation and restoration of land to conserve and enhance natural or scenic resources;

(2) Sensitive Area Protection. The protection of streams and stream environment zones, watersheds, wetlands, natural vegetation, and wildlife habitat zones;

(3) Flood Control. The development, restoration and maintenance of natural and man-made features that control and mitigate floodwaters;

(4) Cultural Resource Preservation. The preservation of historic and pre-historic resources and sites that are designated the Nevada State Historic Preservation Office;

(5) Recreation. The development of facilities needed for passive recreational uses;.

(6) Energy Production. Energy production refers to the commercial production of electricity.

(7) Federal Land Management. Uses that are not listed as allowed uses in the Table of Uses (Table 110.302.05.1-5) for the Open Space Regulatory Zone, but that are otherwise allowed by the Resource are allowed. Management Plans and/or policies of federal agencies

managing lands within the Open Space Regulatory Zone, may be determined allowable uses following consultation and concurrence with the County by the applicable federal agency.

(o) Parks and Recreation Regulatory Zone. The Parks and Recreation (PR) Regulatory Zone is intended for parks, golf courses, ski resorts and other active and passive recreational areas. This category includes uses developed either by public or private capital which may be public or may be restricted, as in the case of private clubs. There is no minimum lot area for this regulatory zone.

(p) Public/Semi-Public Facilities Regulatory Zone. The Public/Semi-Public Facilities (PSP) Regulatory Zone is intended for public or semi-public facilities such as schools, churches, fire stations, hospitals, civic and community buildings, and utility buildings and facilities. This category includes uses developed either by public or private capital which may be public or may be restricted, as in the case of private clubs, but in both cases, a large number of people use the facility and the use is essentially public in nature. There is no minimum lot area for this regulatory zone.

(q) Neighborhood Commercial/Office Regulatory Zone. The Neighborhood Commercial/Office (NC) Regulatory Zone is intended to create and preserve areas for businesses and business parks containing professional, medical, educational, financial and insurance services, and supportive commercial activities having related and compatible functions. This category is also intended to provide a transition or buffer between other more intensive and less intensive uses or between major highways and adjacent residential uses. This regulatory zone also is intended to create and preserve areas for residential uses, including multi-family and neighborhood commercial uses that are complementary to surrounding residential communities. The area is to be developed in a low-intensity, park-like setting. The minimum lot area for this regulatory zone is ten thousand (10,000) square feet, unless the provisions of Section 110.106.30 are met.

(r) General Commercial Regulatory Zone. The General Commercial (GC) Regulatory Zone is intended to create and preserve areas for businesses that provide a variety of wholesale and retail goods and services and serve a community or regional market. The primary uses may include wholesale and retail stores, shopping centers, specialty shops, personal services, and automobile services. Other uses include offices, restaurants, theaters, and other compatible activities. Only limited gaming is allowed. Limited gaming is defined as an establishment which contains no more than fifteen (15) slot machines (and no other game or gaming device) where the operation of the slot machines is incidental to the primary business of the establishment. The minimum lot area for this regulatory zone is ten thousand (10,000) square feet, unless the provisions of Section 110.106.25 are met.

(s) Tourist Commercial Regulatory Zone. The Tourist Commercial (TC) Regulatory Zone is intended to create and preserve areas for commercial establishments that meet the needs of those employees who reside at the resort, transient residents or patrons of a resort, amusement or recreational area, and areas for gaming. Additionally, this category provides a location for ancillary retail activities such as restaurants and shopping. The minimum lot area for this regulatory zone is ten thousand (10,000) square feet, unless the provisions of Section 110.106.25(c) are met.

(t) Industrial Regulatory Zone. The Industrial (I) Regulatory Zone is intended to create and preserve areas for high intensity activities such as manufacturing, warehousing, mining and construction. The Industrial category is intended to create an environment in which industrial operations may be conducted with minimal impact on the natural environment and surrounding land uses. The minimum lot area for this regulatory zone is ten thousand (10,000) square feet, unless the provisions of Section 110.106.25(c) are met.

(u) Specific Plan Regulatory Zone. The Specific Plan (SP) Regulatory Zone is intended to identify areas where detailed study and planning are required to address the unique conditions and needs of an area, the landowners, and the community. The Specific Plan Regulatory Zone is appropriate for redeveloping existing suburban, urban, commercial and industrial areas; re-planning areas that have already begun to develop in an unplanned or uncoordinated manner, planning environmentally sensitive areas, planning for a mixture of land uses and planning new communities. When adopted by the Washoe County Board of County Commissioners, the Specific Plan Regulatory Zone identifies areas where unique planning conditions and needs have been shown to exist and where special considerations are required to more effectively implement the Master Plan. The availability of the Specific Plan Regulatory Zone is not subject to exclusion from specific Character Management Areas and remains available for potential application anywhere in the unincorporated county regardless of its appearance or lack of appearance on lists of available regulatory zones contained within individual Area Plans.

(1) All lands in the Specific Plan Regulatory Zone must be accompanied by a Design Standards Manual (DSM) before any use of the land will be authorized, unless the property is currently subject to a Specific Plan document that is part of Volume Three of the Washoe County Master Plan or contained within the applicable Area Plan. The Design Standards Manual, or specific plan document if one exists, serves as the regulatory framework and vision for development within the Specific Plan area by identifying the appropriate land uses and associated infrastructure necessary to support development.

(2) An important function of an adopted Design Standards Manual within the Specific Plan Regulatory Zone is to tailor the design guidelines and specific development regulations for the proposed land uses to address the unique conditions and needs identified on the property and for the specific mix of uses and development patterns proposed. The required Design Standards Manual shall be submitted as a component of the application for Specific Plan Regulatory Zone. The DSM will be reviewed as a component of the zone change request. Amendments to an adopted DSM are Regulatory Zone amendment requests and as such will be processed in accordance with Article 821, Amendment of Regulatory Zone, of the Washoe County Development Code.

(3) At a minimum, the Design Standards Manual shall include the following components:

(i) A land use map depicting the distribution of land uses throughout the proposed development.

(ii) Statement of the plan and purpose of the development and how the proposal is consistent with the community character as articulated in the Area Plan.

(iii) Policies to implement specific goals contained within the development plan.

(iv) Provision and timing of utilities.

(v) Traffic access, parking, and a traffic and pedestrian circulation plan.

(vi) Architectural guidelines;

(vii) Building siting and setbacks;

(viii) Landscape and fencing guidelines;

(ix) Land use compatibility within the proposed development, and with adjacent land uses and zoning. Where adjacent land uses are not compatible (according to the Washoe County Master Plan), a list of appropriate measures that shall be taken for buffering, screening, including the use of open space, for the purpose of protecting adjacent uses shall be detailed;

(x) Energy supply and conservation;

(xi) Land grading, erosion and flood control;

(xii) Natural features of and natural hazards on the site;

(xiii) Fire protection;

(xiv) Maintenance and enhancement of air quality;

(xv) Wildlife and fisheries preservation;

(xvi) Historic, cultural and archaeological resources preservation;

(xvii) Recreation amenities;

(xviii) Trails and open space provisions and maintenance;

(ixx) Infrastructure financing plan; and

(xx) Procedures for the implementation of the development standards and for minor amendments of the development standards manual.

(4) All discretionary permit applications processed for the subject area must be consistent with the provisions of the approved Design Standards Manual and the types of uses that have been approved during the Specific Plan Regulatory Zone approval process. While the Specific Plan Regulatory Zone is allowed within all Master Plan categories, the

resulting Design Standards Manual must demonstrate general consistency with the Master Plan categories assigned to the subject area and compatibility with surrounding land uses and community character. There is no minimum lot area for this regulatory zone.

[Article amended in its entirety by Ord. 1447, provisions eff. 9/9/10. Amended by Ord. 1475, provisions eff. 1/12/12.]

Section 110.106.20 Common Development Standards For Residential Regulatory Zones. The following criteria are common to all residential regulatory zones:

(a) Site Suitability. The area designated has slope, soil, geology and other physical conditions that make it suitable for the density of residential development.

(b) Noise. Article 414, Noise and Lighting Standards, of the Washoe County Development Code addresses noise standards for all of unincorporated Washoe County.

(c) Special Development Options. The following special development option is allowed for all residential categories: the grouping of residential structures is permitted on lots smaller than those allowed within each regulatory zone, providing that the provisions of Article 408, Common Open Space Development, are met.

Section 110.106.25 Common Development Standards For Non-Residential Regulatory Zones. The following criteria are common to all non-residential regulatory zones:

(a) Site Suitability. The area designated has slope, soil, geology, and other physical conditions that make it suitable for the use being proposed.

(b) Noise. Article 414, Noise and Lighting Standards, of the Washoe County Development Code addresses noise standards for all of unincorporated Washoe County.

(c) Special Development Options. The following special development option is allowed for all non-residential categories: the development of non-residential uses is permitted on lots smaller than those allowed within each regulatory zone, providing that at least one of the following provisions are met:

(1) Common Open Space Development. The provisions of Article 408, Common Open Space Development, are met.

(2) Development Regulations Demonstrated. It is demonstrated that the non-residential development of the lot can meet all applicable development regulations of this Development Code.

Section 110.106.30 Use of Land within Spheres of Influence. Within the spheres of influence created pursuant to the Truckee Meadows Regional Plan, the allowable uses and density for those parcels for which no regulatory zone (i.e. zoning) has been identified, either by Washoe County or the respective City, on the Regulatory Zone maps shall only be those identified by Washoe County Code, Chapter 110, in effect prior to May 26, 1993. The standards of development for those parcels with no identified regulatory zone designation shall be those of the comparable regulatory zone as defined in Table 110.106.30.1, Table of Comparable Regulatory Zones and Pre-1993 Zoning Ordinance Districts. The provisions of this section shall be in effect

for a parcel within a sphere of influence that has no regulatory zone category until one of the following has occurred:

(a) Approval of Regulatory Zone Designation for Parcel. A parcel receives a regulatory zone category through the approval of a Regulatory Zone map amendment processed pursuant to Article 821, Amendment of Regulatory Zone.

(b) Assumption of Development Review Responsibilities by City. The city for whom the sphere of influence is designated assumes development review authority for the parcel pursuant to the Truckee Meadows Regional Plan through written notification to the County.

(c) Adoption of Plan for Joint Planning Area. The city for whom the sphere of influence is designated and Washoe County adopt a plan for the joint planning area.

(d) Annexation of Parcel. The city for whom the sphere of influence is designated annexes the parcel of land.

Table 110.106.30.1

TABLE OF COMPARABLE REGULATORY ZONES AND PRE-1993 ZONING ORDINANCE DISTRICTS

Regulatory Zone	Comparable Pre-1993 Zoning Ordinance District
Low Density Rural	A-5, A-6, A-7, A-8, A-9, A-10, A-11, M-3
Medium Density Rural	A-4, A-5, A-6, A-7, A-8, A-9, A-10, A-11, M-3, E-5
High Density Rural	A-2, A-4, A-5, A-6, A-7, A-8, A-9, A-10, A-11, M-3, E-4, E-5
Low Density Suburban and Low Density Suburban Two	A-1, A-2, A-4, A-5, A-6, A-7, A-8, A-9, A-10, A-11, M-3, E-3, E-4, E-5, C-1
Medium Density Suburban and Medium Density Suburban Four	A-1, A-2, A-3, A-4, A-5, A-6, A-7, A-8, A-9, A-10, A-11, M-3, E-1, E-2, E-4, E-5, C-1
High Density Suburban	R-1, R1-a, R-1b, A-1, A-2, A-3, A-4, A-5, A-6, A-7, A-8, A-9, A-10, A-11, M-3, E-1, E-2, E-4, E-5, C-1
Low Density Urban	R-1, R-1a, R-1b, R-2, R-2a, R-3, A-1, A-2, A-3, A-4, A-5, A-6, A-7, A-8, A-9, A-10, A-11, M-3, E-1, E-2, E-4, E-5, C-1
Medium Density Urban	R-1, R-1a, R-1b, R-2, R-2a, R-3, A-1, A-2, A-3, A-4, A-5, A-6, A-7, A-8, A-9, A-10, A-11, M-3, E-1, E-2, E-4, E-5, C-1
High Density Urban	R-1, R-1a, R-1b, R-2, R-2a, R-3, A-1, A-2, A-3, A-4, A-5, A-6, A-7, A-8, A-9, A-10, A-11, M-3, E-1, E-2, E-4, E-5, C-1
General Commercial	C-1, C-2
Neighborhood Commercial/Office	C-1, C-2
Tourist Commercial	R-H, TC, C-2
Industrial	M-1, ME, MS, MW, C-2
Public/Semi-Public Facilities	A-R, L-R

Parks and Recreation	A-R, L-R
General Rural	A-7, A-8, A-9, A-10, A-11, M-3
General Rural Agricultural	A-7, A-8, A-9, A-10, A-11
Specific Plan	Any zone if included in an adopted Design Standards Manual

Source: Washoe County Department of Community Development

[Article amended in its entirety by Ord. 1447, provisions eff. 9/9/10. Amended by Ord. 1475, provisions eff. 1/12/12.]

Division Two - Area Plan Regulations
CONTENTS

	Page
Area Plan Regulations: Title and Contents	200-1
Area Plan General Regulations	202-1
Forest Area	204-1
High Desert Area	206-1
North Valleys Area	208-1
South Valleys Area	210-1
Southeast Truckee Meadows Area	212-1
Southwest Truckee Meadows Area	214-1
Spanish Springs Area	216-1
Sun Valley Area	218-1
Tahoe Area	220-1
Truckee Canyon Area	222-1
Verdi Area	224-1
Warm Springs Area	226-1

LIST OF FIGURES

Figure 110.212.10.1: Typical Setback at Existing Residence	212-3

LIST OF MAPS

Washoe County Planning Areas	202-4
Map 110.210.05.1: South Valleys Area Plan and Hydrobasins	210-2
Map 110.212.10.1: Hidden Valley Community Area Modifiers Location Map	212-2
Map 110.222.15.1: Wadsworth Community Area Modifier Location Map	222-3

Article 200
AREA PLAN REGULATIONS: TITLE AND CONTENTS

Sections:

110.200.00	**Title**
110.200.05	**Contents**

Section 110.200.00 Title. Division Two of Chapter 110, Development Code, is entitled Area Plan Regulations.

Section 110.200.05 Contents. Division Two consists of the following articles:

(a) ARTICLE 200 AREA PLAN REGULATIONS: TITLE AND CONTENTS

(b) ARTICLE 202 AREA PLAN GENERAL REGULATIONS

(c) ARTICLE 204 FOREST AREA

(d) ARTICLE 206 HIGH DESERT AREA

(e) ARTICLE 208 NORTH VALLEYS AREA

(f) ARTICLE 210 SOUTH VALLEYS AREA

(g) ARTICLE 212 SOUTHEAST TRUCKEE MEADOWS AREA

(h) ARTICLE 214 SOUTHWEST TRUCKEE MEADOWS AREA

(i) ARTICLE 216 SPANISH SPRINGS AREA

(j) ARTICLE 218 SUN VALLEY AREA

(k) ARTICLE 220 TAHOE AREA

(l) ARTICLE 222 TRUCKEE CANYON AREA

(m) ARTICLE 224 VERDI AREA

(n) ARTICLE 226 WARM SPRINGS AREA

Article 202
AREA PLAN GENERAL REGULATIONS

Sections:

110.202.00	**Purpose**
110.202.05	**Compliance with Area Plans**
110.202.10	**Area Plans**
110.202.15	**Regulatory Zones**
110.202.20	**Uses**
110.202.25	**Development Standards**
110.202.30	**Signs**
110.202.35	**Subdivisions**
110.202.40	**Infrastructure**
110.202.45	**Development Approvals**
110.202.50	**Definitions**
110.202.55	**Nonconformities**
110.202.60	**Other Regulations**
110.202.65	**Special Regulations**

Section 110.202.00 Purpose. The purpose of this article, Article 202, Area Plan General Regulations, is to set forth general regulations to implement the area plans contained in Volume Two of the Master Plan and the other applicable plan elements contained in Volume One of the Master Plan.

Section 110.202.05 Compliance with Area Plans. All development shall substantially comply with the text, policies and various maps of the Washoe County Master Plan, including Volume Two: Area Plans.

[Amended by Ord. 875, provisions eff. 8/3/93; Ord. 1447, provisions eff. 9/9/10.]

Section 110.202.10 Area Plans. The area plans subject to the provisions of this article include:

(a) Forest Area Plan;

(b) High Desert Area Plan;

(c) North Valleys Area Plan;

(d) South Valleys Area Plan;

(e) Southeast Truckee Meadows Area Plan;

(f) Southwest Truckee Meadows Area Plan;

(g) Spanish Springs Area Plan;

(h) Sun Valley Area Plan;

(i) Tahoe Area Plan;

(j) Truckee Canyon Area Plan;

(k) Verdi Area Plan; and

(l) Warm Springs Area Plan.

[Refer to the Washoe County Planning Areas map to generally identify the planning areas listed.]

[Renumbered from 110.202.05 and amended by Ord. 875, provisions eff. 8/3/93.]

Section 110.202.15 Regulatory Zones. The regulatory zones for each area plan are identical to the regulatory zone categories as shown on the Regulatory Zone map in each respective area plan.

[Renumbered from 110.202.10 by Ord. 875, provisions eff. 8/3/93. Amended by Ord. 1447, provisions eff. 9/9/10.]

Section 110.202.20 Uses. Uses in the area plans shall comply with this section.

(a) Primary Allowed Uses. Provisions for primary allowed uses are set forth in Article 302, Allowed Uses.

(b) Accessory Uses. Provisions for uses which are accessory to the primary uses are set forth in Article 306, Accessory Uses and Structures.

(c) Temporary Uses and Structures. Provisions for temporary uses and temporary structures are set forth in Article 310, Temporary Uses and Structures.

(d) Other Regulations on Uses. Additional regulations for specific uses are set forth in the other articles in Division Three.

(e) Special Provisions for Uses. Special provisions specific to individual area plans are set forth in Articles 204 through 226.

[Renumbered from 110.202.15 and amended by Ord. 875, provisions eff. 8/3/93.]

Section 110.202.25 Development Standards. All development in the area plans shall comply with this section.

(a) Density and Intensity Standards. Maximum number of units allowed per acre, site coverage, and height of structures are set forth in Article 402, Density/Intensity Standards.

(b) Lot Standards. Minimum and maximum size of lots and the minimum average lot width are set forth in Article 404, Lot Standards.

(c) Building Placement Standards. Building setbacks and yard requirements are set forth in Article 406, Building Placement Standards.

(d) Common Open Space Development. Provisions for common open space development are set forth in Article 408, Common Open Space Development.

(e) Other Development Standards. Additional development standards are set forth in the other articles in Division Four.

(f) Special Provisions for Development Standards. Special provisions specific to individual area plans are set forth in Articles 204 through 226.

[Renumbered from 110.202.20 by Ord. 875, provisions eff. 8/3/93.]

Section 110.202.30 Signs. Signs within the area plans shall comply with Division Five.

[Renumbered from 110.202.25 by Ord. 875, provisions eff. 8/3/93.]

Section 110.202.35 Subdivisions. Subdivisions within the area plans shall comply with Division Six.

[Renumbered from 110.202.30 by Ord. 875, provisions eff. 8/3/93.]

Section 110.202.40 Infrastructure. The provision of infrastructure within the area plans shall comply with Division Seven.

[Amended by Ord. 875, provisions eff. 8/3/93.]

Section 110.202.45 Development Approvals. Development approval procedures within the area plans are set forth in Division Eight.

Section 110.202.50 Definitions. Definitions of words used throughout the Development Code are set forth in Article 902, Definitions.

Section 110.202.55 Nonconformities. Regulations for nonconforming uses, nonconforming structures, and nonconforming lots are set forth in Article 904, Nonconformance.

Section 110.202.60 Other Regulations. Other regulations that may be applicable to the administration of the Development Code are set forth in the other articles in Division Nine.

Section 110.202.65 Special Regulations. Special development regulations specific to individual area plans are set forth in Articles 204 through 226.

[The Washoe County Planning Areas map is not a part of the Washoe County Development Code, but is included for reference only as a visual aid to generally identify the planning areas listed in Section 110.202.10.]

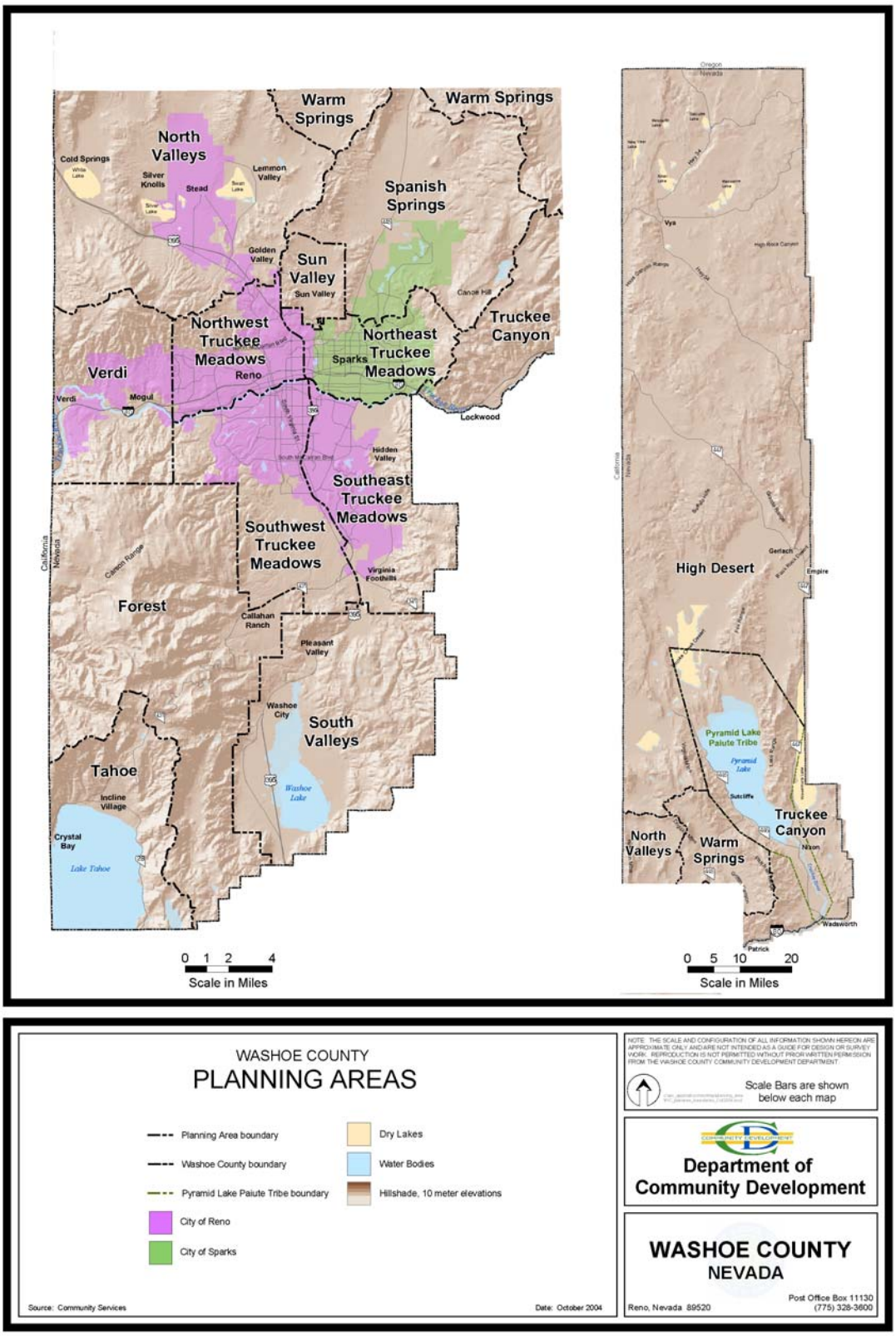

Article 204
FOREST AREA

Sections:

110.204.00	**Purpose**
110.204.05	**Mt. Rose Highway Scenic Roadway Corridor Standards**
110.204.10	**Open Space**
110.204.15	**Development Adjacent to Galena Creek Park**

Section 110.204.00 Purpose. The purpose of this article, Article 204, Forest Area, is to set forth special regulations to supplement the general regulations set forth in Article 202, Area Plan General Regulations, and to implement the Forest Area Plan contained in Volume Two of the Master Plan and the other applicable plan elements contained in Volume One of the Master Plan.

[Amended by Ord. 1447, provisions eff. 9/9/10.]

Section 110.204.05 Mt. Rose Highway Scenic Roadway Corridor Standards. The purpose of this section, Mt. Rose Highway Scenic Roadway Corridor Standards, is to establish regulations to develop, preserve and protect the inherent aesthetic quality of this scenic roadway.

(a) Applicability. The Mt. Rose Highway scenic roadway corridor extends from the intersection with South Virginia Street to the jurisdictional line of the Tahoe Regional Planning Agency.

(1) All new residential, civic, commercial, industrial and agricultural use types established within five hundred (500) feet of the centerline of Mt. Rose Highway shall comply with this section. No variance to this boundary, pursuant to Article 804, Variances, shall be processed or approved.

(2) The following use types are exempt from the provisions of this section:

(i) Construction, enlargement and use of any single family, detached, residence, and all related accessory uses (e.g. garages, barns, corrals, storage sheds) on a parcel entitled to one dwelling unit legally recorded as of April 1, 1996.

(ii) All existing tentative maps and phased final maps, currently active (not expired) and having obtained approval prior to April 1, 1996 are exempt from the provisions of this section.

(iii) All projects with an approved special use permit, design standards handbook and/or development agreement, currently active (not expired) and having obtained approval prior to April 1, 1996 are exempt from the provisions of this section.

(b) Building Height. The maximum allowable height of buildings and structures shall be thirty-five (35) feet. If the underlying building pad has a slope in excess of

fifteen (15) percent, an additional six (6) feet shall be added to the thirty-five (35) foot maximum. The Uniform Building Code (UBC), as currently enacted, shall be used as the measuring standard. Those structures and uses identified in Section 110.402.10, Heights, Special Provisions, are not subject to this section.

(c) Setback. A minimum setback of thirty (30) feet shall be provided along any property line adjoining the Mt. Rose Highway.

(1) Structures shall not be permitted within the setback area. A freestanding sign is not considered a structure.

(d) Parking and Loading. Parking and loading shall be in conformance with Article 410, Parking and Loading, and Article 412, Landscaping, and the following provisions:

(1) Adjacent to the Mt. Rose Highway, all uses proposing one hundred (100) or more parking spaces, parking areas between the right-of-way property line and the main structure shall be limited in size to fifty (50) parking spaces, resulting in a series of smaller parking courts. Parking courts shall be separated by a minimum width of five (5) feet of landscaped area, excluding access drive lanes.

(2) Adjacent to the Mt. Rose Highway, all surface parking areas between the right-of-way property line and the main structure shall provide adequate landscaping material (e.g. shrubs and trees) so as to provide a minimum of fifty (50) percent screening within five (5) years of planting to visually screen parked vehicles. Landscaping material placement and mature height shall be considered to protect distant views, where appropriate.

(3) Adjacent to the Mt. Rose Highway, all delivery bays, loading docks, roll-up doors, trash enclosures, heating and ventilation equipment and other accessory equipment shall be located in such a manner as not to be visible from the Mt. Rose Highway, or shall be fully screened pursuant to Article 412, Landscaping, and provisions of this section.

(4) Compliance with the minimum provisions of this section shall occur within the confines of the boundaries of the affected parcel(s) and shall not be satisfied by the use of public right-of-way.

(e) Access. Access onto Mt. Rose Highway shall be in conformance with Nevada Department of Transportation regulations, Washoe County Development Code Article 436, Street Design Standards, and the following provisions:

(1) Access to any development shall be restricted to one (1) point for each property or two (2) points provided they are at least two hundred (200) feet apart.

(2) If a two-way, divided driveway is proposed, it shall be considered as one (1) access point.

(f) Fences, Walls and Berms. Fences, walls and berms shall be in conformance with Article 406, Building Placement Standards, and Article 412, Landscaping, and the following provisions:

(1) Within the setback area, solid fences, walls or berms shall be permitted provided they do not exceed four-and-one-half (4.5) feet in overall height. Fences and walls shall be constructed of wood, masonry, stone, decorative concrete block, or other textured surfaces. Berms shall be constructed of soil suitable for planting landscaping. Untextured cinder block walls and chain-link or cyclone fences are prohibited on parcels adjacent to the Mt. Rose Highway between the right-of-way property line and the main structure.

(2) Outside the setback area, fences and walls shall not exceed six (6) feet in height and shall be constructed of wood, masonry, stone, decorative concrete block, or other textured surfaces. Untextured cinder block walls and chain-link or cyclone fences are prohibited on parcels adjacent to the Mt. Rose Highway between the right-of-way property line and the main structure.

(3) Multiple retaining walls shall be separated horizontally by a distance equal to at least the height of the lower retaining wall.

(4) The use of color shall be limited to earth tones so that the color blends in with natural surroundings.

(5) Compliance with the minimum provisions of this section shall occur within the confines of the boundaries of the affected parcel(s) and shall not be satisfied by the use of public right-of-way.

(g) Sign. All development shall comply with the following outdoor sign design standards. No variance to these sign standards, pursuant to Article 804, Variances, shall be processed or approved.

(1) Neon signage shall be prohibited.

(2) Sign structures (e.g. supports, poles, sign boxes, etc.) shall be covered and trimmed with wood and/or stone materials.

(3) Illumination, if any, shall be of diffused light that is stationary and of constant intensity.

(4) Exterior sign illumination sources shall be shielded from view.

(5) Street-front signs shall be a monument style with a maximum height of ten (10) feet and a maximum surface area per side of sixty (60) square feet.

(6) Exterior signage design for individual businesses within a building or a shopping complex shall be consistent.

(7) Only one (1) freestanding sign is allowed per project within the boundary of the Mt. Rose Highway scenic roadway corridor.

(8) Temporary Project Sales Signs must be located on-site with a maximum height of eight (8) feet and a maximum surface area per side of fifty (50) square feet. Temporary Project Sales Signs shall not be mobile or portable, or be mounted on any type of vehicle or trailer.

(h) Architecture. The architectural design standards of this section shall apply to civic type uses, commercial type uses and multiple family type uses.

(1) The exterior siding and finishing shall be of wood, stone or stucco.

(2) The use of color shall be limited to earth tones so that the color blends in with natural surroundings.

(3) Roofs shall be of fire resistant material and earth tone in color. Shiny metal roofs shall be prohibited.

(i) Electrical Transmission Lines. Transmission lines of up to 100 kilovolt that parallel the Mt. Rose Highway and new electrical distribution lines of up to 200 amperes shall be placed underground.

[Amended by Ord. 875, provisions eff. 8/3/93. Renamed from "Mt. Rose Highway" and amended by Ord. 942, provisions eff. 4-1-96.]

Section 110.204.10 Open Space. Residential development in the Galena Forest Estates-Callahan Ranch area (defined as those portions south of State Route 431 of T18N, R19E, Sections 34, 35 and 36, and T17N, R19E, Sections 2, 3, 4, 9, 10 and 11, which includes the area south and east of State Route 431, north of the Forest planning area boundary, and west of Fawn Lane) shall include a system of greenbelts along the various creeks. This open space shall be integrated with existing and approved greenbelts in adjacent developments, and shall be offered for dedication to the County.

[Amended by Ord. 875, provisions eff. 8/3/93.]

Section 110.204.15 Development Adjacent to Galena Creek Park. Any development adjacent to the Galena Creek Park shall provide appropriate screening and buffering to maintain the rural, natural forest character of the park.

Article 206
HIGH DESERT AREA

Sections:

110.206.00	**Purpose**
110.206.05	**Mobile Home and Manufactured Home Placement Standards, Development Standards and Design Standards**
110.206.10	**General Rural Regulatory Zone Area Modifier**

Section 110.206.00 Purpose. The purpose of this article, Article 206, High Desert Area, is to set forth special regulations to supplement the general regulations set forth in Article 202, Area Plan General Regulations, and to implement the High Desert Area Plan contained in Volume Two of the Master Plan and the other applicable plan elements contained in Volume One of the Master Plan.

[Amended by Ord. 1447, provisions eff. 9/9/10.]

Section 110.206.05 Mobile Home and Manufactured Home Placement Standards, Development Standards and Design Standards. Mobile home and manufactured home placement standards, development standards and design standards in the High Desert planning area shall be regulated by the following provisions, and are exempt from the provisions of Article 312, Fabricated Housing:

(a) Placement Standards. Mobile homes and manufactured homes may be placed on any residential regulatory zone parcel in the High Desert planning area, including any Trailer (TR) Overlay zone in effect prior to May 26, 1993 with the exception of TR parcels that have the current regulatory zones of either General Commercial, Neighborhood Commercial/Office, Tourist Commercial, Industrial, Open Space, Parks and Recreation, or Public/Semi-Public Facility. Mobile homes and manufactured homes may also be placed on any General Rural Regulatory Zone parcel in the High Desert planning area.

(b) Development Standards. All new placements of mobile homes and manufactured homes, including set-ups and installations, shall comply with the following development standards:

(1) Density and Intensity Standards. Mobile homes and manufactured homes shall be subject to the maximum number of units allowed per acre, site coverage and height of structures as set forth in Article 402, Density/Intensity Standards, for the regulatory zone in which they are located.

(2) Lot Standards. Mobile homes and manufactured homes shall be subject to the minimum and maximum size of lots and the minimum average lot width as set forth in Article 404, Lot Standards, for the regulatory zone in which they are located.

(3) Building Placement Standards. Mobile homes and manufactured homes shall be subject to the building setbacks and yard requirements as set forth in Article 406, Building Placement Standards, for the regulatory zone in which they are located.

(4) Parking. Properties on which mobile homes and manufactured homes are placed shall contain at least two (2) off-street parking spaces. These parking spaces do not have to be located in an enclosed garage or carport.

(5) Skirting. Complete perimeter solid skirting, of a material and color complimentary to the mobile home or manufactured home, shall be provided from the bottom of the mobile home or manufactured home to the ground surface within sixty (60) days of the set-up date. The exterior covering of the mobile home or manufactured home can be used to satisfy the skirting requirement, except that, when a solid concrete or masonry perimeter foundation is used, the exterior covering material need not extend below the top of the foundation.

(6) Foundations. The foundation system must be safe and secure and must comply with the manufacturer's set-up instructions or a federal agency's (HUD/FHA, VA, FNMA or FmHA) approved mobile home and manufactured home foundation system. The foundation system must be set so that the height at the perimeter does not exceed a maximum of thirty-six (36) inches as measured from the bottom of the frame (e.g. support I-beam) to the surrounding finished grade, with at least one (1) section of the perimeter not exceeding sixteen (16) inches in height. The transportation hitch and wheels must be removed from the mobile home or manufactured home within sixty (60) days of occupancy, and the equipment must be either physically removed from the parcel or stored under the unit and be completely concealed by the skirting.

(7) Flood Areas. Mobile homes and manufactured homes located in flood hazard areas or limited flooding areas shall comply with the requirements of Article 416, Flood Hazards.

(c) Design Standards. All new placements of mobile homes and manufactured homes, including set-ups and installations, shall comply with the following appearance standards to ensure aesthetic compatibility with development in the High Desert planning area:

(1) Exterior Siding. Exterior siding of the mobile home or manufactured home shall be made of a non-reflective material.

(2) Roofing Material. The roof of the mobile home or manufactured home shall be constructed of non-reflective materials. Tarps, cloth or other temporary weatherproofing material shall not be allowed as a permanent roof.

[Added by Ord. 875, provisions eff. 8/3/93. Amended by Ord. 939, provisions eff. 11/1/95; Ord. 1023, provisions eff. 7/1/98.]

Section 110.206.10 General Rural Regulatory Zone Area Modifier. In addition to the regulations of the General Rural Regulatory Zone described in Article 106, Regulatory Zones, and

the allowed uses described in Article 302, Allowed Uses, the following regulation modifiers shall apply in the High Desert planning area:

(a) Allowed Uses:

(1) Residential Use Types:

(i) Family residential - attached accessory dwelling;

(ii) Family residential - detached accessory dwelling;

(iii) Manufactured home parks; and

(iv) Group home.

(2) Civic Use Types:

(i) Administrative services;

(ii) Child care - family daycare;

(iii) Community center;

(iv) Convalescent services; and

(v) Postal services.

(3) Commercial Use Types:

(i) Administrative offices;

(ii) Animal sales and services - veterinary services, agricultural;

(iii) Animal sales and services - veterinary services, pets;

(iv) Commercial educational services;

(v) Commercial recreation - commercial campground facilities;

(vi) Lodging services - bed and breakfast inns;

(vii) Medical services;

(viii) Nursery sales - retail;

(ix) Personal services;

(x) Personal storage;

(xi) Recycle center - remote collection facility;

(xii) Repair services, consumer; and

(xiii) Retail sales - convenience.

(4) Agricultural Use Types:

(i) Agricultural processing;

(ii) Agricultural sales; and

(iii) Produce sales.

(5) Multi-Uses:

(i) Company towns, bunkhouse and permanent employee housing;

(ii) Livestock camps; and

(iii) Railroad camps, highway camps and temporary employee housing.

(b) Requiring a Board of Adjustment Approved Special Use Permit Subject to the Provisions of Article 810, Special Use Permits:

(1) Civic Use Types:

(i) Hospital services.

(2) Commercial Use Types:

(i) Adult entertainment;

(ii) Automotive and equipment - automotive repair;

(iii) Automotive and equipment - cleaning;

(iv) Automotive and equipment - equipment repair and sales;

(v) Automotive and equipment - storage of operable vehicles;

(vi) Automotive and equipment – truck stops;

(vii) Commercial centers – neighborhood centers;

(viii) Commercial recreation - indoor entertainment;

(ix) Commercial recreation - indoor sports and recreation;

(x) Commercial recreation – limited gaming facilities;

(xi) Construction sales and services;

(xii) Eating and drinking establishments - convenience;

(xiii) Eating and drinking establishments - full service;

(xiv) Liquor sales – off-premises;

(xv) Liquor sales – on-premises;

(xvi) Retail sales - specialty stores;

(xvii) Recycle center – full service recycle center;

(xviii) Recycle center – residential hazardous substance recycle center;

(xix) Secondhand sales; and

(xx) Transportation services.

(3) Multi-Uses:

(i) Private air strips and glider ports.

(4) Industrial Use Types:

(i) General industrial – heavy;

(ii) General industrial – intermediate;

(iii) General industrial – limited;

(iv) Inoperable vehicle storage;

(v) Laundry services;

(vi) Salvage yards;

(vii) Wholesaling, storage and distribution – heavy; and;

(viii) Wholesaling, storage and distribution – light.

(5) Agricultural Use Types:

(i) Animal slaughtering, commercial.

[Added by Ord. 916, provisions eff. retro. to 5/26/93, amended by Ord. 1378, provisions eff. 8/1/08; Ord. 1485, provisions eff. 3/27/12.]

Article 208
NORTH VALLEYS AREA

Sections:

110.208.00	**Purpose**
110.208.10	**Residential Subdivision Landscaping**
110.208.15	**Neighborhood Commercial**
110.208.20	**Signs**
110.208.25	**Architecture**
110.208.30	**Height Restrictions**
110.208.35	**Water Rights Dedication Requirements**
110.208.40	**Community Water and Sewer Service Requirements**
110.208.45	**Master Plan Amendments Findings**

Section 110.208.00 Purpose. The purpose of this article, Article 208, North Valleys Area, is to set forth special regulations to supplement the general regulations set forth in Article 202, Area Plan General Regulations, and to implement the North Valleys Area Plan contained in Volume Two of the Master Plan and the other applicable plan elements contained in Volume One of the Master Plan.

[Amended by Ord. 1447, provisions eff. 9/9/10.]

Section 110.208.10 Residential Subdivision Landscaping. All new residential subdivisions approved pursuant to Article 608, Tentative Subdivision Maps, shall include a requirement for the subdivider to install climatic adaptive landscaping in the front yard area between the front property line and the main building of each new residential lot.

[Renumbered and renamed from 110.208.20 entitled "Landscaping" and amended by Ord. 867, provisions eff. 5/27/93. Amended by Ord. 875, provisions eff. 8/3/93.]

Section 110.208.15 Neighborhood Commercial. Commercial uses in a residential land use regulatory zone shall be allowed only along existing or proposed collector or arterial streets.

[Renumbered from 110.208.25 by Ord. 867, provisions eff. 5/27/93.]

Section 110.208.20 Signs. All development shall comply with the following outdoor sign design standards:

(a) Neon signage shall be prohibited;

(b) Signs shall be of wood and/or stone construction;

(c) Illumination, if any, shall be of diffused light that is stationary and of constant intensity;

(d) No uplighting shall be allowed;

(e) Street-front signs shall be a maximum height of eight (8) feet and a maximum surface area per side of forty (40) square feet; and

(f) Exterior signage design for individual businesses within a building or a shopping complex shall be consistent.

[Renumbered from 110.208.30 by Ord. 867, provisions eff. 5/27/93. Amended by Ord. 875, provisions eff. 8/3/93.]

Section 110.208.25 Architecture. The architectural design standards of this section shall apply to civic type uses, commercial type uses and multiple family type uses.

(a) The exterior siding and finishing shall be of wood or stone.

(b) The use of color shall be limited to earth tones so that the color blends in with natural surroundings.

(c) Roofs shall be of fire resistant material and earth tone in color. Shiny metal roofs shall be prohibited.

[Renumbered from 110.208.40 by Ord. 867, provisions eff. 5/27/93.]

Section 110.208.30 Height Restrictions. In addition to height restrictions established in Article 402, Density/Intensity Standards, and Article 406, Building Placement Standards, all new structures are limited to two stories in height, except where height in excess of two stories is critical to the function of the structure, such as in the case of communication towers and other similar structures.

[Renumbered from 110.208.40 by Ord. 867, provisions eff. 5/27/93. Amended by Ord. 875, provisions eff. 8/3/93.]

Section 110.208.35 Water Rights Dedication Requirements.

(a) Lemmon Valley Hydrographic Basin. Proof of sufficient certificated water rights, or imported water rights for other hydrographic basins, or "will serve" letters when served by a water purveyor, shall be submitted with the following applications for development: final division of land maps, final parcel maps, final subdivision maps, special use permits, and applications for building permits in the Lemmon Valley Hydrographic Basin, whichever occurs first. Applications for development that do not demonstrate proof of adequate water resources to serve the proposed development shall be rejected.

(b) Cold Springs Hydrographic Basin, Red Rock Hydrographic Basin, Long Valley Hydrographic Basin, Antelope Valley Hydrographic Basin, and Bedell Flat Hydrographic Basin. Proof of sufficient certificated or permitted water rights, or imported water rights for other hydrographic basins, or "will serve" letters when served by a water purveyor, shall be submitted with all applications for development, including division of land maps, parcel maps, subdivision maps, special use permits, and Master Plan land use change applications in the Cold Springs Hydrographic Basin, Red Rock Hydrographic Basin, Long Valley Hydrographic Basin, Antelope Valley Hydrographic Basin, and Bedell Flat Hydrographic Basin. Applications for development that do not demonstrate proof of adequate water resources to serve the proposed development shall be rejected.

[Renumbered from 110.208.45 by Ord. 867, provisions eff. 5/27/93. Renamed from "Lemmon Valley Water Rights" and amended by Ord. 948, provisions eff. 5/1/96. Amended by Ord. 1067, provisions eff. 6/25/99; Ord. 1447, provisions eff. 9/9/10.]

Section 110.208.40 Community Water and Sewer Service Requirements.

(a) All parcel maps and subdivision maps in the Low Density Suburban (LDS: max. 1 du/ac) and greater density land use designations (i.e. regulatory zones), and common open space development subdivisions creating net densities greater than one dwelling per acre, shall require either the installation of dry-line sanitary sewer laterals from the edge of the subdivision boundary to each new residence, or installation of Advanced Environmental Denitrification Treatment (AEDT), on-site sewage disposal systems as approved by Nevada Division of Environmental Protection, Washoe County District Health Department and Washoe County Utility Services Division. Use of AEDT systems require provisions for long-term maintenance as part of the subdivision approval.

(b) The Washoe County District Health Department and/or the Nevada Division of Environmental Protection may require immediate connection to a community sewer treatment service if their adopted regulations and local site conditions do not warrant the use of on-site sewage disposal systems.

(c) All new commercial and industrial development(s) requiring an on-site sewage disposal system tank capacity greater than 1,500 gallons per acre, based on Washoe County District Health Department fixture calculations, shall connect to a community sewer system.

[Added by Ord. 948, provisions eff. 5/1/96.]

Section 110.208.45 Master Plan Amendment Findings. In addition to the findings identified in Article 820, Amendment of Master Plan, applications to amend the North Valleys Area Plan shall include a finding demonstrating adequate future infrastructure capacity to serve the additional projected demand for the requested land use designation (i.e. regulatory zone).

[Added by Ord. 948, provisions eff. 5/1/96. Amended by Ord. 1447, provisions eff. 9/9/10.]

[Previous Section 110.208.05 entitled "U.S. 395" renumbered from 110.208.10 by Ord. 867, provisions eff. 5/27/93; amended by Ord. 875, provisions eff. 8/3/93; and repealed by Ord. 949, provisions eff. 5/1/96. Previous Section 110.208.35 entitled "Parking Lots and Other Paved Areas" repealed by Ord. 867, provisions eff. 5/27/93.]

Article 210
SOUTH VALLEYS AREA

Sections:

110.210.00	**Purpose**
110.210.05	**Water Rights Dedication Requirements**
110.210.10	**General Commercial Modifier**

Section 110.210.00 Purpose. The purpose of this article, Article 210, South Valleys Area, is to set forth special regulations to supplement the general regulations set forth in Article 202, Area Plan General Regulations, and to implement the South Valleys Area Plan contained in Volume Two of the Master Plan and the other applicable plan elements contained in Volume One of the Master Plan.

[Amended by Ord. 1447, provisions eff. 9/9/10.]

Section 110.210.05 Water Rights Dedication Requirements.

(a) Washoe Valley Hydrographic Basin. Dedication of sufficient certificated water rights from the Washoe Valley Hydrographic Basin, or imported water rights from an adjoining hydrographic basin when a parcel is split by the Washoe Valley Hydrographic Basin, or "will serve" letters when served by a water purveyor, shall be provided for all development in the Washoe Valley Hydrographic Basin, including maps of division into large parcels, parcel maps, and subdivision maps, and new civic, commercial and industrial use types.

(1) Proposed parcel maps and tentative subdivision maps in the East Lake area of the Washoe Valley Hydrographic Basin shall not create parcels of less than five (5) acres until a new imported surface or groundwater water source from a different hydrographic basin is available and approved by the County. Refer to Map 110.210.05.1, South Valleys Area Plan and Hydrobasins, to identify the East Washoe Valley 5 Acre Parcel Limitation Boundary.

(b) Pleasant Valley Hydrographic Basin, Eagle Valley Hydrographic Basin, and Truckee Meadows Hydrographic Basin. Dedication of sufficient certificated or permitted water rights from the specified hydrographic basins, or imported water rights from an adjoining hydrographic basin when a parcel is split by the specified hydrographic basins, or "will serve" letters when served by a water purveyor, shall be provided for all development in the Pleasant Valley Hydrographic Basin, Eagle Valley Hydrographic Basin, and Truckee Meadows Hydrographic Basin, including division of land maps, parcel maps, subdivision maps, and new civic, commercial and industrial use types.

Map 110.210.05.1

SOUTH VALLEYS AREA PLAN AND HYDROBASINS

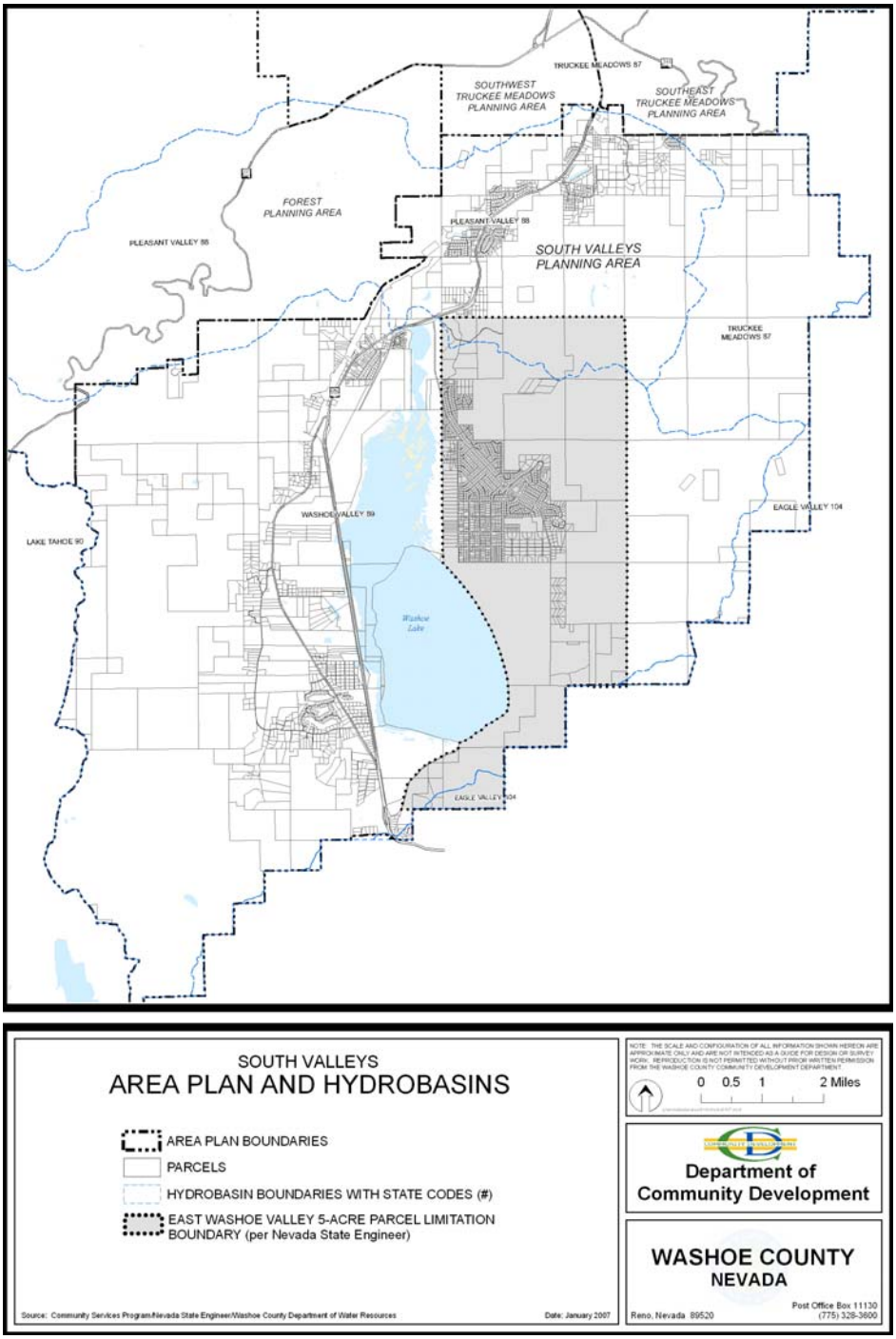

Source: Department of Water Resources and Department of Community Development.

[Renumbered from Section 110.210.10 and amended by Ord. 875, provisions eff. 8/3/93. Renamed from "Water Resources" and amended by Ord. 1043, provisions eff. 12/1/98; Map 110.210.05.1 updated with Ord. 1378, provisions eff. 8/1/08.]

Section 110.210.10 General Commercial Modifier. In addition to the regulations of the General Commercial Regulatory Zone described in Article 106, Regulatory Zones, and the allowed uses described in Article 302, Allowed Uses, the following regulation modifiers shall apply for those parcels designated General Commercial on the Regulatory Zone map in the vicinity of U.S. Highway 395, Washoe City, in the South Valleys planning area, Sections 23 and 24, T17N, R19E:

(a) Requiring a Board of Adjustment Approved Special Use Permit Subject to the Provisions of Article 810, Special Use Permits:

(1) Civic Use Types:

(i) Hospital services; and

(ii) Public parking services.

(2) Commercial Use Types:

(i) Automotive and equipment – automotive sales and rentals;

(ii) Automotive and equipment – cleaning;

(iii) Automotive and equipment – commercial parking;

(iv) Commercial recreation – indoor entertainment;

(v) Secondhand sales; and

(vi) Transportation services.

(3) Industrial Use Types:

(i) Laundry services.

[Added by Ord. 923, provisions eff. 2/6/95. Amended by Ord. 1378, provisions eff. 8/1/08; Ord. 1447, provisions eff. 9/9/10.]

Article 212
SOUTHEAST TRUCKEE MEADOWS AREA

Sections:

110.212.00	**Purpose**
110.212.05	**Medium Density Suburban Area Modifier**
110.212.10	**Hidden Valley Community Area Modifiers**

Section 110.212.00 Purpose. The purpose of this article, Article 212, Southeast Truckee Meadows Area, is to set forth special regulations to supplement the general regulations set forth in Article 202, Area Plan General Regulations, and to implement the Southeast Truckee Meadows Area Plan within Volume Two of the Master Plan and the other applicable plan elements within Volume One of the Master Plan.

[Amended by Ord. 1151, provisions eff. 3/31/02; Ord. 1447, provisions eff. 9/9/10.]

Section 110.212.05 Medium Density Suburban Area Modifier. In addition to the regulations of the regulatory zones described in Article 106, Regulatory Zones, in any area designated Medium Density Suburban in the Southeast Truckee Meadows planning area, the following regulations shall apply.

(a) Density. The maximum number of dwelling units that may be located in the Medium Density Suburban Regulatory Zone in the Southeast Truckee Meadows planning area is two (2) units per acre.

(b) Minimum Lot Area. The minimum lot area allowed in the Medium Density Suburban Regulatory Zone in the Southeast Truckee Meadows planning area is fourteen thousand three hundred seventy-five (14,375) square feet, with the following exceptions:

(1) When abutting a developed Medium Density Suburban area with one-half (1/2) acre or greater lot sizes, the minimum lot area shall be one-half (1/2) acre for all exterior, abutting lots (roads or Open Space regulatory zone do not create non-abutting parcels), and;

(2) Exterior lots may have a minimum lot area of fourteen thousand three hundred seventy-five (14,375) square feet when abutting a developed higher intensity land use designation or a ten (10) acre or larger undeveloped Medium Density Suburban development.

[Amended by Ord. 1151, provisions eff. 3/31/02].

110.212.10 Hidden Valley Community Area Modifiers. The purpose of this section, Hidden Valley Community Area Modifiers, is to establish regulations to promote development consistent with the existing built environment of Hidden Valley; to preserve the scenic characteristics,

wildlife and cultural resources; and sustain the residential tranquillity of the community by the residents.

(a) Applicability. The shaded areas shown on the parcel base Map 110.212.10.1, Hidden Valley Community Area Modifiers Location Map, delineates all parcels within the Hidden Valley Community Area Modifiers.

Map 110.212.10.1

HIDDEN VALLEY COMMUNITY AREA MODIFIERS LOCATION MAP

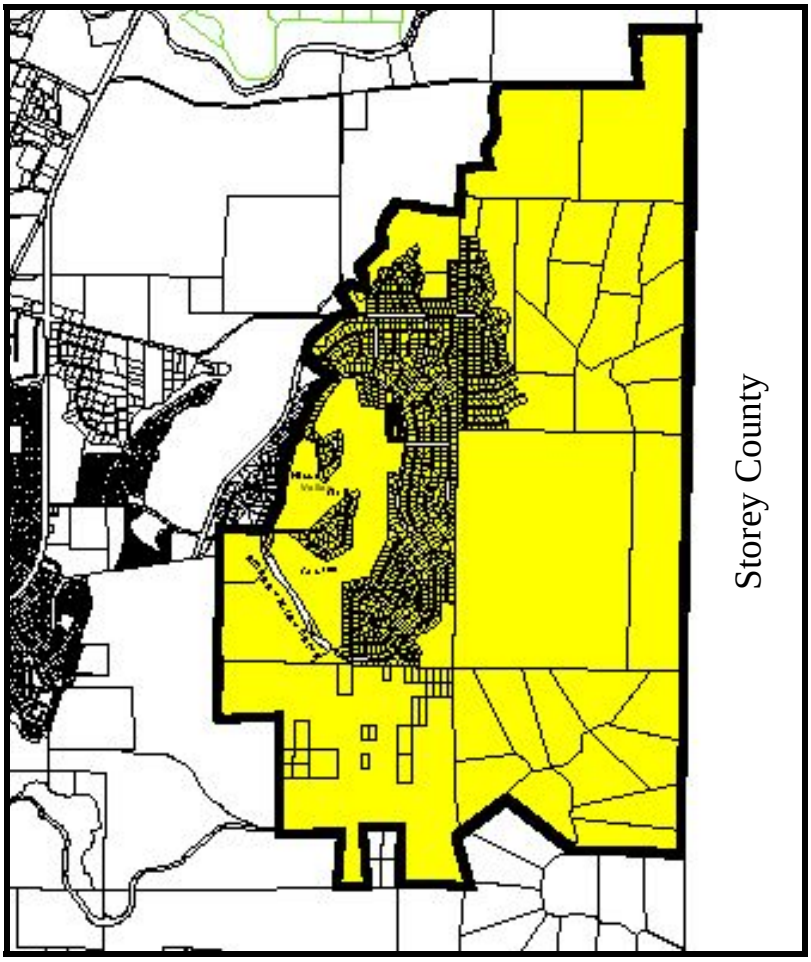

Source: Washoe County Department of Community Development.

(1) All development standards and use type restrictions apply other than the following:

(i) The Director of the Department of Community Development may waive the standards of development or use type limitations on a portion of a parcel shown on a topographic map prepared by a registered land surveyor or engineer licensed in the State of Nevada to be beyond the ridgelines of the vistas of Hidden Valley.

(ii) All General Rural (GR) land use designations, existing tentative maps and phased final maps, applications accepted for processing prior to the effective date of this Ordinance (March 31, 2002), all projects with an approved special use permit, design standards handbook and/or development agreement, currently active (not expired) and having obtained approval prior to the effective date of this Ordinance (March 31, 2002) are exempt from the provisions of this section.

(b) Grading. Grading for subdivision improvements, minor or major special use permits or other discretionary or building permits shall:

(1) Not result in slopes on fill in excess of or steeper than four to one (4:1).

(2) Not result in elevations or fill that differ from the natural grade by more than forty-eight (48) inches or when grading occurs adjacent to an existing residence, fills shall not be placed within an area that exceeds a projected slope of four to one (4:1) for a distance of forty (40) feet from the common property line. Refer to Figure 110.212.10.1, Typical Setback at Existing Residence.

Figure 110.212.10.1

TYPICAL SETBACK AT EXISTING RESIDENCE

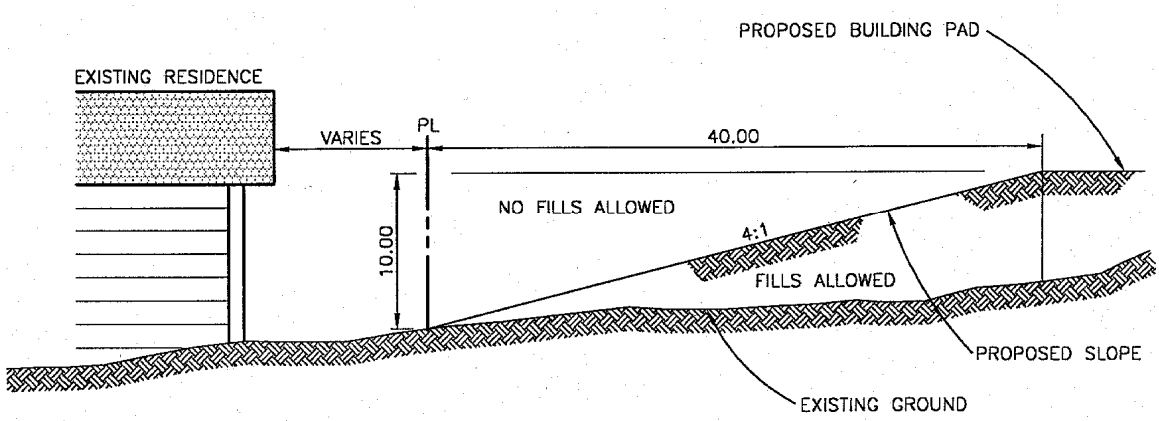

Sources: Summit Engineering Corporation and Washoe County Department of Community Development.

(3) Be limited on cut slopes to equal to, or steeper than, three to one (3:1) and may include a rockery or manufactured masonry retaining wall with a maximum height of eight (8) feet. If necessary, one (1) additional retaining wall set back eight (8) feet from the first wall will be allowed.

Or,

(4) If the applicant proposes cut, fills or slopes in excess of the standard, the applicant shall address compatibility with adjacent lots and visual impacts to the community and propose design criteria, landscaping and buffering to mitigate impacts on adjacent property owners and the

community's scenic character. The mitigation shall be reviewed by the Design Review Committee prior to any ground-disturbing activities.

(c) Cut Slope Stabilization and Revegetation. A slope stabilization plan and a revegetation plan shall be submitted for all ground-disturbing activities requiring a grading or building permit that results in a cut or fill slope. The Department of Community Development may require the plan be reviewed by the Design Review Committee at the next available scheduled meeting whenever mitigation of potential erosion onto adjacent property or exposure of significant cuts is required.

(d) Buffers. Whenever a proposed new residential subdivision includes lots smaller than fourteen thousand three hundred seventy-five (14,375) net square feet abutting existing lots larger than fourteen thousand three hundred seventy-five (14,375) net square feet, a landscape buffer zone must be created. The buffer zone shall be a minimum of fifty (50) feet in width and shall run along all existing adjacent lots. Financial assurance shall be provided for installation of the ornamental landscaping and perpetual maintenance shall be assured prior to the recordation of a final map.

(1) The minimum fifty (50) foot wide ornamental landscaping buffer strip, including an irrigation plan, shall be reviewed and approved by the Design Review Committee.

(2) The buffer must include a minimum of one (1) evergreen tree per fifteen (15) linear feet.

(3) Other ornamental vegetation shall be sufficient to provide an all-season screening of the development from adjacent properties within five (5) years of installation.

(4) The ornamental landscape buffer strip shall be designated Common Area on the final map.

(5) A district established to guarantee maintenance of the landscaping in perpetuity at no expense to Washoe County must be created prior to the recordation of the first final subdivision map to maintain landscaping and assure compliance with the mandated screening, as provided under Nevada Revised Statutes (NRS) 278.4789.

(e) Sidewalks. The construction of new concrete sidewalks or other multi-purpose paths in all subdivisions with final maps recorded after the effective date of this Ordinance (March 31, 2002) are prohibited unless installed and maintained by Washoe County and at no expense or liability to the adjacent property owner.

(f) Allowed Uses. The Table of Uses as set forth in Section 110.302.05 is modified in the following manner:

(1) Residential Use Types. The following residential use types as listed in Table 110.302.05.1, Table of Uses (Residential Use Types), shall be prohibited:

(i) Duplex;

(ii) Multi Family;

(iii) Single Family, Attached; and

(iv) Manufactured Home Parks.

(2) Civic Use Types. The following civic use types as listed in Table 110.302.05.2, Table of Uses (Civic Use Types), shall be prohibited:

(i) Administrative Services;

(ii) Large-Family Daycare;

(iii) Child Daycare;

(iv) Community Center over two thousand (2,000) square feet, with the exception of facilities approved by the Park and Recreation Commission for the Hidden Valley Regional Park;

(v) Convalescent Services;

(vi) Cultural and Library Services, unless existing facilities;

(vii) Group Care

(viii) Hospital Services;

(ix) Major Public Facilities;

(x) Nature Center;

(xi) Postal Services; and

(xii) Public Parking Facilities.

(3) Commercial Use Types. All commercial use types as listed in Table 110.302.05.3, Table of Uses (Commercial Use Types), shall be prohibited with the exception of golf courses and ancillary uses commonly associated with golf courses and their club houses.

(4) Industrial Use Types. All industrial use types as listed in Table 110.302.05.4, Table of Uses (Industrial Use Types), are prohibited.

(5) Agricultural Use Types. All agricultural use types as listed in Table 110.302.05.5, Table of Uses (Agricultural Use Types), are prohibited with the exception of animal grazing and crop production of hay.

(6) Federal or State Law Mandated Allowed Uses. Federal or state law mandated allowed uses are exempt from this restriction.

(g) Reflective Building Materials. Reflective or shiny metal sidings and roofs shall be prohibited on all structures.

(h) Building Height. Lots in subdivisions recorded after the effective date of this Ordinance (March 31, 2002) and which abut a previously developed and recorded lot shall not erect structures which exceed the number of stories of the adjacent developed lot(s).

(1) Structures limited to one (1) story shall not exceed twenty-five (25) feet in height as measured by the Uniform Building Code (UBC) and Section 110.902.15, Definitions, of the Washoe County Development Code.

(2) Two (2) story structures, when permitted, shall be restricted to thirty-five (35) feet in height as measured by the Uniform Building Code (UBC) and Section 110.902.15, Definitions, of the Washoe County Development Code.

(i) Setbacks. Setbacks for the main structure on lots recorded prior to the effective date of this Ordinance (March 31, 2002) shall be thirty (30) feet for the front and twenty (20) feet for the rear yards. Lots with two (2) front yards shall maintain the setback for both front yards. Side yard setbacks for the main structure shall be eight (8) feet for parcels less than .4 acres and fifteen (15) feet for parcels more than .4 acres. Setbacks for structures on lots recorded after the effective date of this Ordinance (March 31, 2002) shall require the lots adjacent to developed lots to adhere to this setback standard.

(j) Streetlights. The erection of new streetlights shall be prohibited on local residential streets. Replacement of existing streetlights is allowed.

[Added by Ord. 1151, provisions eff. 3/31/02].

Article 214
SOUTHWEST TRUCKEE MEADOWS AREA

Sections:

110.214.00	**Purpose**
110.214.05	**Mt. Rose Highway Scenic Roadway Corridor Standards**
110.214.10	**Height Restrictions**
110.214.15	**Industrial Development**

Section 110.214.00 Purpose. The purpose of this article, Article 214, Southwest Truckee Meadows Area, is to set forth special regulations to supplement the general regulations set forth in Article 202, Area Plan General Regulations, and to implement the Southwest Truckee Meadows Area Plan contained in Volume Two of the Master Plan and the other applicable plan elements contained in Volume One of the Master Plan.

[Amended by Ord. 1447, provisions eff. 9/9/10.]

Section 110.214.05 Mt. Rose Highway Scenic Roadway Corridor Standards. The purpose of this section, Mt. Rose Highway Scenic Roadway Corridor Standards, is to establish regulations to develop, preserve and protect the inherent aesthetic quality of this scenic roadway.

(a) Applicability. The Mt. Rose Highway scenic roadway corridor extends from the intersection with South Virginia Street to the jurisdictional line of the Tahoe Regional Planning Agency.

(1) All new residential, civic, commercial, industrial and agricultural use types established within five hundred (500) feet of the centerline of Mt. Rose Highway shall comply with this section. No variance to this boundary, pursuant to Article 804, Variances, shall be processed or approved.

(2) The following use types are exempt from the provisions of this section:

(i) Construction, enlargement and use of any single family, detached, residence, and all related accessory uses (e.g. garages, barns, corrals, storage sheds) on a parcel entitled to one dwelling unit legally recorded as of April 1, 1996.

(ii) All existing tentative maps and phased final maps, currently active (not expired) and having obtained approval prior to April 1, 1996 are exempt from the provisions of this section.

(iii) All projects with an approved special use permit, design standards handbook and/or development agreement, currently active (not expired) and having obtained approval prior to April 1, 1996 are exempt from the provisions of this section.

(b) Building Height. The maximum allowable height of buildings and structures shall be thirty-five (35) feet. If the underlying building pad has a slope in excess of fifteen (15) percent, an additional six (6) feet shall be added to the thirty-five (35) foot maximum. The Uniform Building Code (UBC), as currently enacted, shall be used as the measuring standard. Those structures and uses identified in Section 110.402.10, Heights, Special Provisions, are not subject to this section.

(c) Setback. A minimum setback of thirty (30) feet shall be provided along any property line adjoining the Mt. Rose Highway.

(1) Structures shall not be permitted within the setback area. A freestanding sign is not considered a structure.

(d) Parking and Loading. Parking and loading shall be in conformance with Article 410, Parking and Loading, and Article 412, Landscaping, and the following provisions:

(1) Adjacent to the Mt. Rose Highway, all uses proposing one hundred (100) or more parking spaces, parking areas between the right-of-way property line and the main structure shall be limited in size to fifty (50) parking spaces, resulting in a series of smaller parking courts. Parking courts shall be separated by a minimum width of five (5) feet of landscaped area, excluding access drive lanes.

(2) Adjacent to the Mt. Rose Highway, all surface parking areas between the right-of-way property line and the main structure shall provide adequate landscaping material (e.g. shrubs and trees) so as to provide a minimum of fifty (50) percent screening within five (5) years of planting to visually screen parked vehicles. Landscaping material placement and mature height shall be considered to protect distant views, where appropriate.

(3) Adjacent to the Mt. Rose Highway, all delivery bays, loading docks, roll-up doors, trash enclosures, heating and ventilation equipment and other accessory equipment shall be located in such a manner as not to be visible from the Mt. Rose Highway, or shall be fully screened pursuant to Article 412, Landscaping, and provisions of this section.

(4) Compliance with the minimum provisions of this section shall occur within the confines of the boundaries of the affected parcel(s) and shall not be satisfied by the use of public right-of-way.

(e) Access. Access onto Mt. Rose Highway shall be in conformance with Nevada Department of Transportation regulations, Washoe County Development Code Article 436, Street Design Standards, and the following provisions:

(1) Access to any development shall be restricted to one (1) point for each property or two (2) points provided they are at least two hundred (200) feet apart.

(2) If a two-way, divided driveway is proposed, it shall be considered as one (1) access point.

(f) Fences, Walls and Berms. Fences, walls and berms shall be in conformance with Article 406, Building Placement Standards, and Article 412, Landscaping, and the following provisions:

(1) Within the setback area, solid fences, walls or berms shall be permitted provided they do not exceed four-and-one-half (4.5) feet in overall height. Fences and walls shall be constructed of wood, masonry, stone, decorative concrete block, or other textured surfaces. Berms shall be constructed of soil suitable for planting landscaping. Untextured cinder block walls and chain-link or cyclone fences are prohibited on parcels adjacent to the Mt. Rose Highway between the right-of-way property line and the main structure.

(2) Outside the setback area, fences and walls shall not exceed six (6) feet in height and shall be constructed of wood, masonry, stone, decorative concrete block, or other textured surfaces. Untextured cinder block walls and chain-link or cyclone fences are prohibited on parcels adjacent to the Mt. Rose Highway between the right-of-way property line and the main structure.

(3) Multiple retaining walls shall be separated horizontally by a distance equal to at least the height of the lower retaining wall.

(4) The use of color shall be limited to earth tones so that the color blends in with natural surroundings.

(5) Compliance with the minimum provisions of this section shall occur within the confines of the boundaries of the affected parcel(s) and shall not be satisfied by the use of public right-of-way.

(g) Sign. All development shall comply with the following outdoor sign design standards. No variance to these sign standards, pursuant to Article 804, Variances, shall be processed or approved.

(1) Neon signage shall be prohibited.

(2) Sign structures (e.g. supports, poles, sign boxes, etc.) shall be covered and trimmed with wood and/or stone materials.

(3) Illumination, if any, shall be of diffused light that is stationary and of constant intensity.

(4) Exterior sign illumination sources shall be shielded from view.

(5) Street-front signs shall be a monument style with a maximum height of ten (10) feet and a maximum surface area per side of sixty (60) square feet.

(6) Exterior signage design for individual businesses within a building or a shopping complex shall be consistent.

(7) Only one (1) freestanding sign is allowed per project within the boundary of the Mt. Rose Highway scenic roadway corridor.

(8) Temporary Project Sales Signs must be located on-site with a maximum height of eight (8) feet and a maximum surface area per side of fifty (50) square feet. Temporary Project Sales Signs shall not be mobile or portable, or be mounted on any type of vehicle or trailer.

(h) Architecture. The architectural design standards of this section shall apply to civic type uses, commercial type uses and multiple family type uses.

(1) The exterior siding and finishing shall be of wood, stone or stucco.

(2) The use of color shall be limited to earth tones so that the color blends in with natural surroundings.

(3) Roofs shall be of fire resistant materials and earth tone in color. Shiny metal roofs shall be prohibited.

(i) Electrical Transmission Lines. Transmission lines of up to 100 kilovolt that parallel the Mt. Rose Highway and new electrical distribution lines of up to 200 amperes shall be placed underground.

[Amended by Ord. 875, provisions eff. 8/3/93. Renamed from "Mt. Rose Highway" and amended by Ord. 942, provisions eff. 4-1-96.]

Section 110.214.10 Height Restrictions. In addition to height restrictions established in Article 402, Density/Intensity Standards, and Article 406, Building Placement Standards, all new commercial structures in commercial or residential regulatory zones are limited to two stories in height, not to exceed thirty-five (35) feet in height. If the underlying building pad has a slope in excess of fifteen (15) percent, an additional six (6) feet shall be added to the thirty-five (35) foot maximum. The Uniform Building Code (UBC), as currently enacted, shall be used as the measuring standard. Those structures and uses identified in Section 110.402.10, Heights, Special Provisions, are not subject to this section.

[Amended by Ord. 875, provisions eff. 8/3/93; Ord. 942, provisions eff. 4-1-96.]

Section 110.214.15 Industrial Development. Within the Southwest Truckee Meadows planning area, new long-term industrial development shall only be located within the Specific Plan Regulatory Zone.

[Amended by Ord. 875, provisions eff. 8/3/93.]

Article 216
SPANISH SPRINGS AREA

Sections:

110.216.00	**Purpose**
110.216.05	**Pyramid Lake Highway**
110.216.10	**Buffers**
110.216.15	**Commercial Center Development Standards**
110.216.20	**Commercial Center Development Application Requirements**
110.216.25	**Commercial Center Development Site Plan Requirements**
110.216.30	**Agricultural Uses**
110.216.35	**Air Pollution**
110.216.40	**Industrial Development**
110.216.45	**Water Rights Requirements**
110.216.50	**Ornamental Water Features**
110.216.55	**Spanish Springs Water Detention Facility**

Section 110.216.00 Purpose. The purpose of this article, Article 216, Spanish Springs Area, is to set forth special regulations to supplement the general regulations set forth in Article 202, Area Plan General Regulations, and to implement the Spanish Springs Area Plan contained in Volume Two of the Master Plan and the other applicable plan elements contained in Volume One of the Master Plan.

[Amended by Ord. 1447, provisions eff. 9/9/10.]

Section 110.216.05 Pyramid Lake Highway. Development along the Pyramid Lake Highway shall comply with the following:

(a) Access. Direct egress or ingress onto new individual parcels in addition to that existing on the May 26, 1993 is prohibited, unless no other alternative egress or ingress can be shown.

[Amended by Ord. 875, provisions eff. 8/3/93; Ord. 949, provisions eff. 5/1/96.]

Section 110.216.10 Buffers. A minimum twenty-five (25) foot open space/scenic view buffer shall be provided on parcels along all arterial rights-of-way, measured in from the street edge property line. No fences, walls or structures shall be permitted in the buffer areas. Such buffer areas shall be included in the calculation of allowable density.

[Amended by Ord. 875, provisions eff. 8/3/93.]

Section 110.216.15 Commercial Center Development Standards. The standards of this section shall apply to all commercial centers.

(a) Allowed Uses. Most uses allowed in Table 110.302.05.3, Table of Uses, in the General Commercial Regulatory Zone are allowed as a principal use in a commercial center. In addition, a restrictive covenant in favor of the County will be required to prohibit billboards, dwellings or dwelling units, bars, used car lots,

cocktail lounges, taverns and other uses which are, in the opinion of the Director of Community Development, similar or accessory to the specified uses. A neighborhood commercial center in the Spanish Springs planning area requires a Board of Adjustment approved special use permit as set forth in Article 810, Special Use Permits.

(b) Site Area. Any commercial center shall be located on a parcel having an area of at least five (5) acres.

(c) Height Limitation. In addition to height restrictions set forth in Article 402, Density/Intensity Standards, and Article 406, Building Placement Standards, structures within a commercial center shall be limited to a maximum height of two (2) stories in height.

(d) Maximum Lot Coverage. The total ground area, occupied by all principal buildings, together with all accessory buildings, shall not exceed twenty-five (25) percent of the total area of the site.

(e) Building Setback Line. All buildings shall be sited a minimum of eighty (80) feet from all street rights-of-way. A strip twenty (20) feet deep along the front property line shall be maintained as a landscaped buffer strip. The remaining area may be used for parking.

(f) Side and Rear Yards. Each commercial center site shall have side and rear yards of at least fifty (50) feet in width. A strip twenty (20) feet in width or depth along the side and rear lot lines shall be maintained as a landscaped buffer strip. The remaining area may be used for parking.

(g) Buffer Requirements Adjacent to Residential Areas. Along any boundary line adjacent to a residential area, an appropriate buffer area shall be provided to screen or block vision, glare, odors or other negative by-products associated with the commercial use. Buffer areas may be utilized for stormwater containment and infiltration.

(h) Access Ways. Each commercial center site shall have not more than two (2) access points to any street, unless unusual circumstances demonstrate the need for additional access ways is demonstrated. Access to Pyramid Lake Highway (SR 445) shall be permitted only from existing streets or street extensions, unless no other access can be provided. No part of any access shall be closer than two hundred (200) feet to the intersection of any two street right-of-way lines.

(i) Access Barrier. Each commercial center site, with its buildings, other structures, and parking and loading areas, shall be physically separated from each adjoining street by a curb or other suitable barrier against unchanneled motor vehicle ingress and egress. Except for permitted access ways, the barrier shall be continuous for the entire length of the property line.

(j) Off-Street Parking and Loading Areas. All off-street parking and loading areas shall comply with Article 410, Parking and Loading.

(k) Lighting. All parking areas and access ways shall be flood lighted at night during business hours. All outside lighting shall be arranged and shielded to prevent

glare or reflection, nuisance, inconvenience or hazardous interference of any kind on adjoining streets or residential properties.

(l) Waste Pens and Incinerators. Each building shall be provided with an enclosed waste pen of sufficient size to accommodate all trash and waste generated and/or stored on the premises. Waste pens and refuse receptacles shall be designed to ensure adequate odor control and the prevention of wind-blown debris from leaving the site. There shall be no burning of refuse on the premises.

[Amended by Ord. 875, provisions eff. 8/3/93; Ord. 1040, provisions eff. 11/1/98; Ord. 1288, provisions eff. 3/24/06, Ord. 1378, provisions eff. 8/1/08.]

Section 110.216.20 Commercial Center Development Application Requirements. The application submittal requirements of this section shall apply to proposed commercial centers. The application requirements include the following:

(a) Ownership. Ownership to include all owners with ten (10) percent or greater interest.

(b) Legal Description. Legal description for site and for proposed regulatory zones.

(c) Market Analysis. A market analysis that includes the following:

(1) Trade area of proposed shopping center;

(2) Population of trade area, present and projected;

(3) Effective buying power, present and projected;

(4) Net potential customer buying power for proposed stores and, on the basis of such buying power, the recommended store types and store floor area; and

(5) Residual amount of buying power and how it may be expected to be expanded in existing business areas serving the proposed area.

(d) Site Location Evaluation. Site location evaluation to include access, size and shape, site preparation requirements, utilities, drainage and environmental considerations.

(e) Key Tenant Commitments. A description of key tenant commitments that includes the following:

(1) Copy of prospectus provided to prospective tenants;

(2) Letter of intent, lease or occupancy agreement; and

(3) Prospective tenant list of requirements for proposed center.

(f) Financial Commitment. Financial commitment in the form of a forfeitable, site restoration bond for one hundred fifty thousand dollars ($150,000) or one (1) percent of the development costs, whichever is greater.

(g) Water Rights. Proof of sufficient water rights pursuant to Section 110.216.45.

[Amended by Ord. 875, provisions eff. 8/3/93.]

Section 110.216.25 Commercial Center Development Site Plan Requirements. The site plan submittal requirements of this section shall apply to commercial centers. All site plans shall include appropriate titles, name and address of preparer, north arrow, scale not less than 1 inch = 100 feet, contours at two (2) foot intervals, and vicinity map.

(a) Existing Conditions. The site plan shall show the following existing conditions:

(1) Boundary line, existing zoning, acreage by zone and total acreage of site;

(2) Size and location of existing water mains, sewers, culverts, manholes and other underground facilities within the site;

(3) Location, widths and names of all existing or prior platted streets and utility rights-of-way within five hundred (500) feet of the outside boundary of the site;

(4) Park and other public open spaces within five hundred (500) feet of the outside boundary of the site;

(5) Permanent buildings and structures within five hundred (500) feet of the outside boundary of the site; and

(6) Parcels (with ownership indicated), easements and section lines within five hundred (500) feet of the outside boundary of the site.

(b) Proposed Development. The site plan shall show the following with respect to proposed development:

(1) Location, layout and dimensions of principal and accessory buildings;

(2) Traffic circulation within the confines of the center;

(3) Location and dimensions of vehicular drives, entrances, exits, and acceleration and deceleration lanes;

(4) Location, arrangement and dimensions of both customer and employee parking spaces; and width of aisles, width of bays and angle of parking;

(5) Location, arrangement and dimensions of truck loading and unloading spaces and docks;

(6) Location and dimensions of pedestrian entrances, exits and walks;

(7) Architectural sketches of the proposed buildings;

(8) Drainage and sanitary systems;

(9) Location, height, materials and color of walls, fencing and screen plantings;

(10) Ground cover, finished grades, slopes and banks;

(11) Location, size, height, materials, illumination, color and orientation of all commercial signs;

(12) Proposed standards for unspecified, tenant building facade signs;

(13) Stages of development with commencement and completion dates and reservations for future development; and

(14) Traffic impact analysis and proposed mitigation measures.

[Amended by Ord. 875, provisions eff. 8/3/93.]

Section 110.216.30 Agricultural Uses. Agricultural uses as defined in Article 304, Use Classification System, shall be considered compatible with all allowed uses within the Spanish Springs planning area.

Section 110.216.35 Air Pollution. All new development shall comply with all applicable Washoe County District Health Department regulations regarding air pollution and woodburning devices.

[Amended by Ord. 875, provisions eff. 8/3/93.]

Section 110.216.40 Industrial Development. Within the Spanish Springs planning area, new long-term industrial development shall only be located within the Specific Plan Regulatory Zone.

[Amended by Ord. 875, provisions eff. 8/3/93.]

Section 110.216.45 Water Rights Requirements. Residential and commercial development in the Spanish Springs planning area shall provide proof of sufficient water rights based upon the following:

(a) Decreed Truckee River water rights when used in an appropriate drought yield discount as determined by the State Engineer;

(b) Imported groundwater from a source that is replenished in sufficient quantity to meet demands placed upon a source without groundwater mining; and

(c) Certificated groundwater rights or permitted quasi-municipal groundwater rights (that existed as of May 22, 1990) matched by imported, decreed surface water, from a source such as the Truckee River, equal to one-half (1/2) of the groundwater rights.

[Amended by Ord. 875, provisions eff. 8/3/93.]

Section 110.216.50 Ornamental Water Features. The use of groundwater for new ornamental surface water features such as ponds and fountains is prohibited.

Section 110.216.55 Spanish Springs Water Detention Facility. All proposed development in the Spanish Springs planning area shall evaluate and develop storm drainage improvements which ensure the Spanish Springs Water Detention Facility remains hydraulically equivalent to the design parameters of the facility existing at the time of adoption of this section.

Article 218
SUN VALLEY AREA

Sections:

110.218.00	**Purpose**
110.218.05	**Community Water and Sewer**
110.218.10	**Architecture**
110.218.15	**Air Pollution**
110.218.20	**Height Restrictions**
110.218.25	**New Parcel Restrictions**
110.218.30	**Development in Spanish Springs Hydrographic Basin**
110.218.35	**Mobile Home and Manufactured Home Placement Standards, Development Standards and Design Standards**
110.218.40	**Neighborhood Commercial Regulatory Zone Area Modifier**

Section 110.218.00 Purpose. The purpose of this article, Article 218, Sun Valley Area, is to set forth special regulations to supplement the general regulations set forth in Article 202, Area Plan General Regulations, and to implement the Sun Valley Area Plan contained in Volume Two of the Master Plan and the other applicable plan elements contained in Volume One of the Master Plan.

[Amended by Ord. 1447, provisions eff. 9/9/10.]

Section 110.218.05 Community Water and Sewer. The following types of development shall be served by community water and sewer facilities:

(a) Residential development of one (1) unit or more per acre;

(b) All commercial development; and

(c) All industrial development.

Section 110.218.10 Architecture. All commercial development shall comply with the architectural design standards of this section.

(a) The exterior siding and finish for individual businesses within a building or a complex shall be uniform.

(b) Signage design for individual businesses within a building or a complex shall be uniform.

[Renumbered from 110.218.15 by Ord. 867, provisions eff. 5/27/93.]

Section 110.218.15 Air Pollution. All new development shall comply with all applicable Washoe County District Health Department regulations regarding air pollution and woodburning devices.

[Renumbered from 110.218.20 by Ord. 867, provisions eff. 5/27/93. Amended by Ord. 875, provisions eff. 8/3/93.]

Section 110.218.20 Height Restrictions. In addition to height restrictions established in Article 402, Density/Intensity Standards, and Article 406, Building Placement Standards, all new residential, commercial and industrial structures are limited to two stories in height.

[Renumbered from 110.218.25 by Ord. 867, provisions eff. 5/27/93. Amended by Ord. 875, provisions eff. 8/3/93.]

Section 110.218.25 New Parcel Restrictions. The creation of additional parcels in any regulatory zone within the Sun Valley planning area is restricted to areas within the service area of recognized water purveyors.

[Renumbered from 110.218.30 by Ord. 867, provisions eff. 5/27/93. Amended by Ord. 875, provisions eff. 8/3/93.]

Section 110.218.30 Development in Spanish Springs Hydrographic Basin. Development in the Sun Valley planning area proposing to utilize groundwater resources from the Spanish Springs Hydrographic Basin is required to follow the water supply policies and action programs in the Spanish Springs Area Plan regulations.

[Renumbered from 110.218.35 by Ord. 867, provisions eff. 5/27/93. Amended by Ord. 875, provisions eff. 8/3/93.]

Section 110.218.35 Mobile Home and Manufactured Home Placement Standards, Development Standards and Design Standards. Mobile home and manufactured home placement standards, development standards and design standards in the Sun Valley planning area shall be regulated by the following provisions, and are exempt from the provisions of Article 312, Fabricated Housing:

(a) Placement Standards. Mobile homes and manufactured homes may be placed on any residential regulatory zone parcel in the Sun Valley planning area, including any Trailer (TR) Overlay zone in effect prior to May 26, 1993 with the exception of TR parcels that have the current regulatory zones of either General Commercial, Neighborhood Commercial/Office, Tourist Commercial, Industrial, Open Space, Parks and Recreation, or Public/Semi-Public Facility.

(b) Development Standards. All new placements of mobile homes and manufactured homes, including set-ups and installations, shall comply with the following development standards:

(1) Density and Intensity Standards. Mobile homes and manufactured homes shall be subject to the maximum number of units allowed per acre, site coverage and height of structures as set forth in Article 402, Density/Intensity Standards, for the regulatory zone in which they are located.

(2) Lot Standards. Mobile homes and manufactured homes shall be subject to the minimum and maximum size of lots and the minimum average lot width as set forth in Article 404, Lot Standards, for the regulatory zone in which they are located.

(3) Building Placement Standards. Mobile homes and manufactured homes shall be subject to the building setbacks and yard requirements as set forth in Article 406, Building Placement Standards, for the regulatory zone in which they are located.

(4) Parking. Properties on which mobile homes and manufactured homes are placed shall contain at least two (2) off-street parking spaces. These parking spaces do not have to be located in an enclosed garage or carport.

(5) Skirting. Complete perimeter solid skirting, of a material and color complimentary to the mobile home or manufactured home, shall be provided from the bottom of the mobile home or manufactured home to the ground surface within sixty (60) days of the set-up date. The exterior covering of the mobile home or manufactured home can be used to satisfy the skirting requirement, except that, when a solid concrete or masonry perimeter foundation is used, the exterior covering material need not extend below the bottom of the foundation.

(6) Foundations. The foundation system must be safe and secure and must comply with the manufacturer's set-up instructions or a federal agency's (HUD/FHA, VA, FNMA or FmHA) approved mobile home and manufactured home foundation system. The foundation system must be set so that the height at the perimeter does not exceed a maximum of thirty-six (36) inches as measured from the bottom of the frame (e.g. support I-beam) to the surrounding finished grade, with at least one (1) section of the perimeter not exceeding sixteen (16) inches in height. The transportation hitch and wheels must be removed from the mobile home or manufactured home within sixty (60) days of occupancy, and the equipment must be either physically removed from the parcel or stored under the unit and be completely concealed by the skirting.

(7) Flood Areas. Mobile homes and manufactured homes located in flood hazard areas or limited flooding areas shall comply with the requirements of Article 416, Flood Hazards.

(c) Design Standards. All new placements of mobile homes and manufactured homes, including set-ups and installations, shall comply with the following appearance standards to ensure aesthetic compatibility with development in the Sun Valley planning area:

(1) Exterior Siding. Exterior siding of the mobile home or manufactured home shall be made of a non-reflective material.

(2) Roofing Material. The roof of the mobile home or manufactured home shall be constructed of non-reflective materials. Tarps, cloth or other temporary weatherproofing material shall not be allowed as a permanent roof.

[Added by Ord. 875, provisions eff. 8/3/93. Amended by Ord. 939, provisions eff. 11/1/95; Ord. 1023, provisions eff. 7/1/98.]

[Previous Section 110.218.10 entitled "Commercial and Industrial Landscaping" repealed by Ord. 867, provisions eff. 5/27/93.]

Section 110.218.40 Neighborhood Commercial Regulatory Zone Area Modifier. In addition to the regulations of the Neighborhood Commercial (NC) regulatory zone described in Article 106, Regulatory Zones, and the allowed uses described in Article 302, Allowed Uses, the

regulation modifier shall apply to the Neighborhood Commercial Regulatory Zone in the Sun Valley planning area:

(a) Allowed Use:

(1) Commercial Use Type:

(i) Secondhand sales.

[Added by Ord. 1377, provisions eff. 8/1/08.]

Article 220
TAHOE AREA

Sections:

110.220.00	**Purpose**
110.220.05	**Development Standards**
110.220.10	**Removal of Abandoned Foundation or Structure**
110.220.15	**Height of Structures**
110.220.20	**Detached Accessory Structures**
110.220.25	**Requirements for the Construction of a Garage**
110.220.30	**At or Below Grade Parking Decks, Walkways and Decks**
110.220.35	**Construction Below a Parking Deck**
110.220.40	**Conformance of Setbacks on Existing Residences**
110.220.45	**Historic Site Overview**

Section 110.220.00 Purpose. The purpose of this article, Article 220, Tahoe Area, is to set forth special regulations to supplement the general regulations set forth in Article 202, Area Plan General Regulations, and to implement the Tahoe Area Plan contained in Volume Two of the Master Plan and the other applicable plan elements contained in Volume One of the Master Plan.

[Amended by Ord. 1447, provisions eff. 9/9/10.]

Section 110.220.05 Development Standards. The standards for development in the Tahoe planning area shall be the development standards of either the Tahoe Regional Planning Agency or Washoe County, whichever is more restrictive.

[Amended by Ord. 1017, provisions eff. 6/1/98.]

Section 110.220.10 Removal of Abandoned Foundation or Structure. Prior to the issuance of a building permit for a new structure, any existing abandoned or unfinished foundation or structure, not being incorporated into the new structure, shall be removed. Any portion of an existing foundation incorporated into the new structure shall be certified for structural integrity by a civil or structural engineer registered in the State of Nevada.

[Amended by Ord. 982, provisions eff. 6/1/97.]

Section 110.220.15 Height of Structures. The maximum building height for any structure shall be calculated by the Tahoe Regional Planning Agency Ordinance, Chapter 22, Height Standards, in effect at the time of issuance of a building permit.

[Added by Ord. 1017, provisions eff. 6/1/98.]

Section 110.220.20 Detached Accessory Structures. The following development requirements shall apply to detached accessory structures:

(a) Property Line Setback. Accessory structures one (1) story in height, with maximum ten (10) feet high walls (measured from grade level to top plate) and a maximum roof pitch of 7/12, shall maintain a five (5) foot minimum setback from

the rear and side property line. When the height of an accessory structure exceeds this height limitation, the structure shall maintain the yard setbacks for the main dwelling units stipulated in Article 406, Building Placement Standards.

(b) Height and Story Limit.

(1) The maximum building height for any accessory structure erected outside the required yard setbacks shall be calculated by the Tahoe Regional Planning Agency Ordinance, Chapter 22, Height Standards, in effect at the time of issuance of a building permit.

(2) An accessory structure within the front yard shall not exceed one (1) story.

(3) An accessory structure may be two (2) stories in height when the main dwelling unit is two (2) stories, the structure is erected outside the required yard setbacks, and the slope of the front half of the lot is greater than a two (2) foot rise (or fall) for every ten (10) feet above (or below) the established street grade.

(i) Plumbing shall be limited to one (1) sink unit and one (1) toilet; and

(ii) A deed restriction must be recorded on the property declaring the space shall not be used in a fashion as to constitute a secondary residence or separate residential unit. The area shall not be leased, rented or used separate from the primary residence on the property.

(c) Below Grade Story. When the structure is at or below street grade, a first story may be constructed below grade providing the ceiling height is no greater than nine-and-one-half (9.5) feet.

(1) Plumbing shall be limited to one (1) sink unit and one (1) toilet; and

(2) A deed restriction must be recorded on the property declaring the space shall not be used in a fashion as to constitute a secondary residence or separate residential unit. The area shall not be leased, rented or used separate from the primary residence on the property.

(d) Siting. Any accessory structure shall comply with the following siting requirements:

(1) In the case of a corner lot abutting two (2) streets, no detached accessory structure shall be erected so as to encroach upon the front yard setbacks; and

(2) A detached accessory structure, used as a private garage, may be built to the front property line on any corner lot when built no closer than sixty (60) feet from the corner, and on any interior or through lot where the slope of the front half of the lot is greater than a two (2) foot rise (or fall) for every ten (10) feet above (or below) the established street grade. The structure shall conform to the height and story limits provided within this section.

(i) The Engineering Division must be able to determine that County snow removal operations will not be impeded or sufficient measures have been incorporated in the structure's design to mitigate an impediment to County snow removal operations and/or the County has been held harmless from liability resulting from its snow removal operations;

(ii) The Engineering Division must be able to determine that the speed of traffic and the volume of traffic on the street is such that the placing of the garage at the property line will not cause a safety problem for vehicles using the street; and

(iii) The Engineering Division must be able to determine that the placement of the garage at the property line will not impede the ability of the County to widen the street in accordance with the adopted Capital Improvements Program, or in accordance with a possible widening of the street as shown in the adopted Master Plan.

(iv) The placement of the garage is not sited closer than fifteen (15) feet from the edge of pavement of the abutting street.

(v) The maximum square footage of the structure shall not exceed 576 square feet.

(vi) There is no existing garage or structure, or portion thereof, built as a garage that has been converted to another use.

(e) Building Setback. A detached accessory structure shall be located not closer than ten (10) feet to any main building on an adjoining parcel.

[Added by Ord. 982, provisions eff. 6/1/97. Renumbered from 110.220.15 and amended by Ord. 1017, provisions eff. 6/1/98. Amended by Ord. 1290, provisions eff. 3/24/06; Ord. 1447, provisions eff. 9/9/10.]

Section 110.220.25 Requirements for the Construction of a Garage. An enclosed garage shall not be required to be constructed in accordance with Article 410, Parking and Loading, when an existing dwelling unit is enlarged and one (1) of the following conditions exist:

(a) There is no Tahoe Regional Planning Agency land coverage available for purchase within the land capability necessary for transfer;

(b) Within a common open space subdivision or multi-family project, there is no new coverage or no relocation of coverage; or

(c) Within a single family dwelling, there is no new coverage or no relocation of coverage.

[Added by Ord. 1017, provisions eff. 6/1/98.]

Section 110.220.30 At or Below Grade Parking Decks, Walkways and Decks. On any downslope lot, a parking deck, walkway or deck with handrails may be constructed within the front setback provided:

(a) A parking deck, not utilized as a driveway to a garage, begins at the edge of pavement and has no greater upslope than one (1) percent;

(b) A parking deck, utilized as a driveway to a garage, may begin at the edge of pavement and have no greater upslope than fourteen (14) percent; or

(c) A walkway or entry deck is no higher than eighteen (18) inches above grade at the edge of pavement.

[Added by Ord. 1017, provisions eff. 6/1/98.]

Section 110.220.35 Construction Below a Parking Deck. On a downslope lot, the area below an allowed parking deck may be utilized for habitable space within the front setback provided:

(a) The Engineering Division is able to determine that:

(1) County snow removal operations will not be impeded or sufficient measures have been incorporated in the structure's design to mitigate an impediment to County snow removal operations and/or the County has been held harmless from liability resulting from its snow removal operations; and

(2) Construction of the habitable space below the parking deck in the front yard will not impede the ability of the County to widen the street in accordance with the adopted Capital Improvements Program, or in accordance with a possible widening of the street as shown in the adopted Master Plan.

(b) Electrical and mechanical rooms as accessory to the main dwelling unit may be established.

(c) The habitable space contains no plumbing fixtures.

[Added by Ord. 1017, provisions eff. 6/1/98. Amended by Ord. 1447, provisions eff. 9/9/10.]

Section 110.220.40 Conformance of Setbacks on Existing Residences. The existing setbacks for a home constructed prior to 1990 shall be legal and conforming when:

(a) The building pad is not delineated on the final subdivision map;

(b) The home was constructed with all required permits prior to 1990;

(c) No further intrusion into the setback is requested; and

(d) The Engineering Division is able to determine that County snow removal operations will not be impeded and/or the County has been held harmless from liability resulting from its snow removal operations.

[Added by Ord. 1017, provisions eff. 6/1/98.]

Section 110.220.45 Historic Site Overview. The purpose of the Historic Site Overview is to preserve buildings and sites which have been listed on a national or state registry of historic places and to provide for appropriate uses other than those permitted in the underlying regulatory zone as an aid to the owners' efforts to preserve the historic or landmark value.

(a) The owner shall provide documentation that the structure(s) or site(s) has been listed on a National or State of Nevada historic registry. If the documentation supporting the designation on the historic registry does not enumerate the specific significance and location of historic importance, the applicant shall submit supplemental information to identify the significance (e.g. architecture, site of a historic event, and location).

(b) An operations plan must be submitted to the Department of Community Development prior to the issuance of a general business license.

(1) The plan shall indicate proposed uses and the days and hours of operation.

(2) The plan shall include a sketch, to scale, of the exterior grounds and/or interior space to be used for the proposed uses.

(3) The plan shall include a parking plan indicating the maximum number of vehicles to be parked on and off the site, projected needs for parking at the site and means to satisfy the projected needs. If parking is proposed off-site, the parking plan shall identify how visitors will access the site (e.g. bus or shuttle route including pickup location, hours and frequency of operation). In no case shall a parking plan be approved which obstructs public and/or emergency vehicles or relies on street parking either on state highways or local streets adjacent to neighboring residential properties.

(4) The plan shall include a written statement from the applicants agreeing to adhere to the provisions of Section 110.220.45 and the conditions placed on the business license.

(5) The operations plan shall be reviewed and may be approved, modified or approved with conditions by the Director of Community Development or his/her authorized representative. The final operations plan will serve as the conditions placed on the business license.

(6) The Director shall find that the proposed uses shall not be detrimental to the neighborhood and shall contribute to the protection and preservation of the historic significance of the structure(s) or site(s).

(c) No modifications may be made to historic structure(s) or site(s) which would have the effect of compromising the historical significance of the property's structure(s) or site(s).

(d) Not withstanding the provisions of this section, the proposed operations and uses of the structures within the Historic Site Overlay shall meet all applicable building safety and building code requirements, fire regulations and Washoe County District Health Department regulations applicable to the operations plan submitted under subsection (b) of this section.

(e) Prior to issuance of a business license, the approved operations plan shall be mailed to all property owners pursuant to Section 110.810.25, Notice (Special Use Permits). An appeal may be filed within ten (10) days of the mailing of notice pursuant to Section 110.810.50, Appeals (Special Use Permits).

[Added by Ord. 1241, provisions eff. 6/18/04.]

[Previous Section 110.220.20 entitled "Additions" added by Ord. 982, provisions eff. 6/1/97 and repealed by Ord. 1017, provisions eff. 6/1/98.]

Article 222
TRUCKEE CANYON AREA

Sections:

110.222.00	**Purpose**
110.222.05	**Buffers**
110.222.10	**Truckee River Corridor Standards**
110.222.15	**Wadsworth Community Area Modifier**

Section 110.222.00 Purpose. The purpose of this article, Article 222, Truckee Canyon Area, is to set forth special regulations to supplement the general regulations set forth in Article 202, Area Plan General Regulations, and to implement the Truckee Canyon Area Plan contained in Volume Two of the Master Plan and the other applicable plan elements contained in Volume One of the Master Plan.

[Amended by Ord. 1447, provisions eff. 9/9/10.]

Section 110.222.05 Buffers. A minimum twenty-five (25) foot open space/scenic buffer shall be provided on parcels along all arterial rights-of-way, and the I-80 right-of-way, measured in from the street edge property line. No fences, walls or structures shall be permitted in the buffer areas. Such buffer areas shall be included in the calculation of allowable density.

[Amended by Ord. 875, provisions eff. 8/3/93; Ord. 1005, provisions eff. 2/1/98]

Section 110.222.10 Truckee River Corridor Standards. The purpose of this section, Truckee River Corridor Standards, is to establish regulations to develop, preserve, protect and improve the inherent water quality of the river.

(a) Applicability. The Truckee River corridor extends from the U.S. Geological Survey - Vista gauge to the jurisdictional line of the Pyramid Lake Paiute Reservation.

(1) All new residential developments which result in over eighty (80) peak hour trips on the local and regional streets and highways system; new civic, commercial and industrial use types; and agricultural processing and commercial animal slaughtering uses established within one (1) mile of the center of the Truckee River shall comply with this section. No variance to this boundary, pursuant to Article 804, Variances, shall be processed or approved.

(2) The following use types are exempt from the provisions of this section:

(i) All new residential developments which create less than eighty (80) peak hour trips on the local and regional streets and highways system, and construction, enlargement and use of any single family, detached, residence, and all related accessory uses (e.g. garages, barns, corrals, storage sheds) on a parcel entitled to one (1) dwelling unit created prior to January 1, 1998.

(ii) All projects with an approved special use permit, design standards handbook and/or development agreement, currently active (not expired) and having obtained approval prior to January 1, 1998.

(iii) Agricultural use types, excluding agricultural processing and commercial animal slaughtering uses are exempt from the provisions of this section.

(iv) Any expansion of an existing use or structure that will not increase the gross floor area of the building structure by twenty-five (25) percent, or expand the use of the parcel by twenty-five (25) percent.

(b) Grading. A special use permit, as enumerated in Article 810, Special Use Permits, approved by the Washoe County Board of Adjustment, shall be required for all grading and earthmoving activities within the 100-year floodplain, or within three hundred (300) feet of the center of the Truckee River, whichever is greater.

(c) Structural Setback. No permanent building structures shall be erected within the 100-year floodplain, or within three hundred (300) feet of the center of the Truckee River, whichever is greater.

(d) Water Quality Report. All projects subject to the applicability of this section shall provide a water quality report describing the mitigation measures that will be constructed or provided to produce no measurable increase over the river's reach of regulated water quality parameters (total dissolved solids, nitrogen, phosphorous, ambient temperature, etc.) as established by the Nevada Division of Environmental Protection. This report shall be submitted with any application for approval by the County, including new business license applications and new construction building permits.

(e) Development Agreement. A development agreement, as enumerated in Article 814, Development Agreements, shall be required for all of the following circumstances:

(1) Developments which are projects of regional significance, as enumerated in Article 812, Projects of Regional Significance.

(2) Projects which result in over eighty (80) peak hour trips on the local and regional streets and highways system.

(3) Developments which require connection to either a community water system or a community wastewater treatment plant.

[Added by Ord. 1005, provisions eff. 2/1/98, amended by Ord. 1378, provisions eff. 8/1/08.]

[Previous Section 110.222.10 entitled "Interstate 80" renamed to "Interstate 80 Corridor"; amended by Ord. 875, provisions eff. 8/3/93; and repealed by Ord. 949, provisions eff. 5/1/96.]

110.222.15 Wadsworth Community Area Modifier. The purpose of this section is to establish regulations to support limited commercial development within a specific area of the Wadsworth community.

(a) Applicability. Limited commercial development shall be restricted to parcels located within the Wadsworth Commercial Corridor Overlay as outlined in Map 110.222.15.1 designated with a Medium Density Suburban (MDS) regulatory zone with an approved special use permit by the Washoe County Board of Adjustment pursuant to Article 810.

Map 110.222.15.1

WADSWORTH COMMUNITY AREA MODIFIER LOCATION MAP

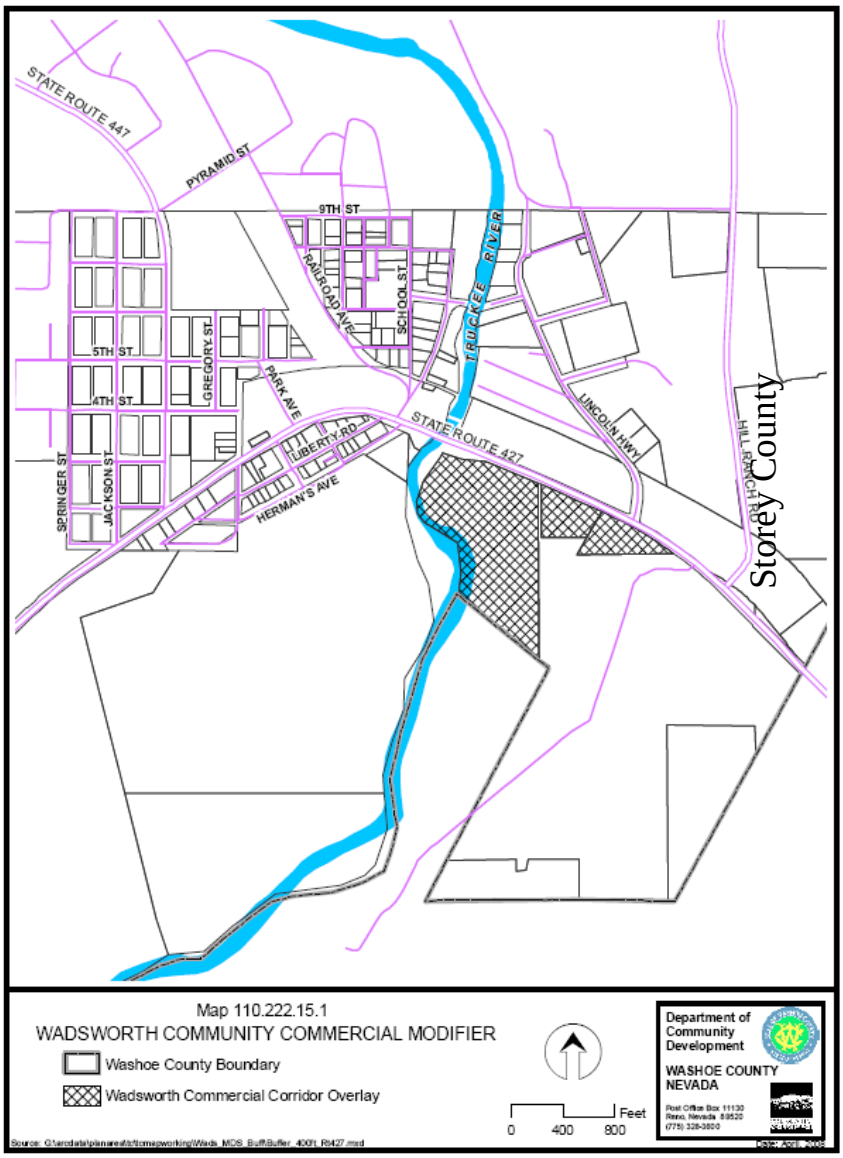

Source: Washoe County Department of Community Development.

(1) Allowed Uses. The Table of Uses as set forth in Section 110.302.05 is modified in the following manner:

(i) Commercial Use Type. The following commercial use type as listed in Table 110.302.05.3, Table of Uses (Commercial Use Types), shall be allowed with a Special Use Permit approved by the Board of Adjustment:

(1) Equipment Repair and Sales.

[Added by Ord. 1379, provisions eff. 8/1/08.]

Article 224
VERDI AREA

Sections:

110.224.00	**Purpose**
110.224.10	**Low Density Suburban Area Modifier**
110.224.15	**Water Resource Requirements**
110.224.20	**Agricultural Uses**
110.224.25	**Air Pollution**

Section 110.224.00 Purpose. The purpose of this article, Article 224, Verdi Area, is to set forth special regulations to supplement the general regulations set forth in Article 202, Area Plan General Regulations, and to implement the Verdi Area Plan contained in Volume Two of the Master Plan and the other applicable plan elements contained in Volume One of the Master Plan.

[Amended by Ord. 1447, provisions eff. 9/9/10.]

Section 110.224.10 Low Density Suburban Area Modifier. In addition to the regulations of the regulatory zones described in Article 106, Regulatory Zones, in any area designated Low Density Suburban in the Verdi planning area, the following regulations shall apply:

(a) Community Water System. With the exception of parcel maps, subdivisions with lots averaging one and seventy-five hundredths (1.75) acre, and with a minimum lot size of one (1) acre, are not required to have a community water system serve the subdivision. Subdivisions not meeting this standard shall connect to a community water system.

[Amended by Ord. 875, provisions eff. 8/3/93.]

Section 110.224.15 Water Resource Requirements. In addition to provisions of Article 422, Water and Sewer Resource Requirements, when submitting applications for subdivisions, parcel maps and other projects in the Verdi planning area, the applicant must identify the following:

(a) The source of the water supply;

(b) The quality of the water supply;

(c) The quantity of the water supply; and

(d) The basis of water rights and/or the name of the water service provider.

[Amended by Ord. 875, provisions eff. 8/3/93.]

Section 110.224.20 Agricultural Uses. Agricultural uses as defined in Article 304, Use Classification System, shall be considered compatible with all allowed uses within the Verdi planning area.

Section 110.224.25 Air Pollution. All new development shall comply with all applicable Washoe County District Health Department regulations regarding air pollution and woodburning devices.

[Amended by Ord. 875, provisions eff. 8/3/93.]

[Section 110.224.05 entitled "Interstate 80 Corridor" amended by Ord. 875, provisions eff. 8/3/93; and repealed by Ord. 949, provisions eff. 5/1/96.]

Article 226
WARM SPRINGS AREA

Sections:

110.226.00	**Purpose**
110.226.05	**Pyramid Lake Highway**
110.226.10	**Water Resources**
110.226.15	**General Rural Agricultural Area Modifier**
110.226.18	**Equestrian Uses**
110.226.20	**Industrial Development**
110.226.25	**Road Access Permits**
110.226.30	**Ornamental Water Features**
110.226.35	**Disposal of Sludge**

Section 110.226.00 Purpose. The purpose of this article, Article 226, Warm Springs Area, is to set forth special regulations to supplement the general regulations outlined in Article 202, Area Plan General Regulations, and to implement the Warm Springs Area Plan contained in Volume Two of the Master Plan and the other applicable plan elements contained in Volume One of the Master Plan.

[Amended by Ord. 1447, provisions eff. 9/9/10; Ord. 1475, provisions eff. 1/12/12.]

Section 110.226.05 Pyramid Lake Highway. Development along Pyramid Lake Highway shall comply with the following:

(a) Access. Direct egress or ingress onto new individual parcels in addition to that existing on May 26, 1993 is prohibited, unless no other alternative egress or ingress can be shown.

[Amended by Ord. 875, provisions eff. 8/3/93; Ord. 949, provisions eff. 5/1/96; Ord. 1017, provisions eff. 6/1/98.]

Section 110.226.10 Water Resources. The applicant shall demonstrate, at the time of application for amendment to the Master Plan, projects of regional significance, tentative subdivision maps, parcel maps, and division of land maps, that the following water resources criteria can be met:

(a) Existing certificated and permitted agricultural and stockwater groundwater rights, issued as of July 31, 1990, are utilized in a proportional amount to serve proposed residential development. In order to balance the existing, issued groundwater rights with the planning perennial yield of the basin, two-and-one-half (2-1/2) acre feet of groundwater rights per dwelling unit will be dedicated to Washoe County. A maximum of three thousand ninety-seven (3,097) residential dwelling units on individual wells may be developed in the Warm Springs Valley Hydrographic Basin based on the planning perennial yield of groundwater. Additional water rights will be dedicated to Washoe County for such purposes as common landscaped areas, community swimming pools, and pastures within residential developments.

(b) Parcels created by applications submitted through September 4, 1990 may develop for residential uses without the requirement for dedication of water rights. When existing parcels are subdivided, new parcels will require the dedication of water rights; however, one (1) parcel will be designated as existing and will not have to dedicate water rights. The Department of Community Development will track the date of parcel subdivisions.

(c) Commercial and industrial development, to include uses such as public facilities and golf courses, will be required to document project water demand and supply sufficient groundwater rights for the project. If existing certificated and/or permitted irrigation or stock-watering groundwater rights, issued as of July 31, 1990, are used to serve the proposed project, water rights will be dedicated to Washoe County at a ratio of forty-three (43) percent of existing groundwater rights to one (1) acre foot of demand. This ratio is necessary to balance the existing, issued groundwater rights with the planning perennial yield of the basin.

(d) Water rights for all development in the Warm Springs planning area will be dedicated to Washoe County at the time of parcel map filing or project recordation. These water rights will be irrevocably tied to the Warm Springs Valley Hydrographic Basin.

(e) The creation of parcels and lots in the Warm Springs Valley Hydrographic Basin shall require dedication of water rights to Washoe County in quantities that are consistent with Article 422, Water and Sewer Resource Requirements of this Development Code and the policies adopted in the Warm Springs Area Plan.

(f) Residential, commercial and industrial development shall be based upon perennial yield groundwater resources without reliance upon groundwater mining or recharge from agricultural uses. The Washoe County Board of County Commissioners shall not approve these types of development if the demands upon the proposed permanent source of water supply exceed the perennial yield of the hydrographic basin or exceed artificial recharge as authorized by the State Engineer under a recharge/recovery permit.

[Amended by Ord. 875, provisions eff. 8/3/93; Ord. 1447, provisions eff. 9/9/10.]

Section 110.226.15 General Rural Agricultural Area Modifier. In addition to the regulations of the regulatory zones described in Article 106, Regulatory Zones, and Article 302, Allowed Uses, in any area designated General Rural Agricultural in the Warm Springs planning area, the following regulations shall apply:

(a) Allowed Uses.

(1) One (1) permanent single-family dwelling. A new single-family dwelling in General Rural Agricultural (GRA) zoning is not required to have a garage or carport.

(2) Detached accessory dwelling unit. A detached accessory dwelling unit in General Rural Agricultural (GRA) zoning is NOT limited to the minimum or maximum floor area requirements as specified in Article 306, Accessory Uses and Structures.

(3) Four (4) or fewer motorized vehicles. Four (4) or fewer motorized vehicles owned by and registered to occupants of a detached single-

family dwelling unit, and used for commercial activities conducted away from the residence may be parked on the property, provided the vehicles are operable and registered under the provisions of the Nevada Vehicle Code for street travel. All commercial vehicles shall be parked within an enclosed garage or behind a screened enclosure.

(b) Uses Requiring a Board of Adjustment Approved Special Use Permit Subject to the Provisions of Article 810, Special Use Permits.

(1) Private air strips, glider ports and personal landing fields.

(2) Five (5) or more motorized vehicles. Five (5) or more motorized vehicles owned by and registered to occupants of a detached single-family dwelling unit, and used for commercial activities conducted away from the residence may be parked on the property, provided the vehicles are operable and registered under the provisions of the Nevada Vehicle Code for street travel. All commercial vehicles shall be parked within an enclosed garage or behind a screened enclosure.

(c) Prohibited Uses.

(1) Disposal of human waste sludge and other sewage treatment by-products as land fill;

(2) Any industrial land uses or industrial processes;

(3) Any commercial land uses or activities which are not stated in the permitted uses;

(4) Natural resource utilization uses (e.g. permanent aggregate pit operations, mining, ore processing, etc.) for commercial, industrial or private use;

(5) Commercial motorized vehicle raceway or sponsored motorized vehicle racing events (e.g. motorcycles, off-road vehicles, etc.); and

(6) Salvage yards, auto wrecking businesses and commercial junk yard operations.

(d) General Standards.

(1) Access for equestrian, vehicular and pedestrian traffic shall be limited to appropriate dedicated easements.

[Amended by Ord. 875, provisions eff. 8/3/93; Ord. 1076, provisions eff. 10/1/99; Ord. 1447, provisions eff. 9/9/10; Ord. 1475, provisions eff. 1/12/12.]

Section 110.226.18 Equestrian Uses. The keeping or raising of horses, mules, donkeys or ponies as a private, non-commercial use is regulated within Article 330, Domestic Pets and Livestock. Otherwise, in addition to the regulations of the regulatory zones described in Article 106, Regulatory Zones, and Article 302, Allowed Uses, on all legally-established parcels greater than thirty-five (35) acres in area and zoned General Rural (GR) or General Rural Agricultural (GRA) in the Warm Springs planning area, the following regulations shall apply:

(a) Allowed Uses.

(1) Boarding Stables. The boarding, keeping or raising of up to three (3) horses, mules, donkeys, or ponies per acre as an accessory use to an established residential or agricultural use on the property (excluding horses used primarily for agricultural operations which are classified under animal production). Typical associated uses and activities could include, but are not limited to: riding instruction, roping practice, barrel racing practice, dressage practice and jumping practice for the boarders of said horses.

(b) Uses Requiring a Board of Adjustment Approved Special Use Permit Subject to the Provisions of Article 810, Special Use Permits.

(1) Commercial Stables. The commercial boarding, keeping or raising of more than three (3) horses, mules donkeys, or ponies per acre (excluding horses used primarily for agricultural operations which are classified under animal production). Typical uses and activities could include, but are not limited to, commercial riding stables open to the public, riding clubs, and riding instruction facilities.

(2) Equestrian Facilities. Commercial (public or private) horse, mule, donkey, or pony facilities, to include at a minimum or any part thereof: riding schools/academies, exhibition facilities (for shows or other competitive events including, but not limited to, riding, roping, barrel racing, jumping events, dressage, bull riding), boarding facilities, and all other ancillary or accessory structures and uses typical and/or incidental to such facilities.

[Added by Ord. 1513, provisions eff. 7/12/13.]

Section 110.226.20 Industrial Development. Within the Warm Springs planning area, new industrial development shall be limited to light industrial use types and shall be located only within areas designated with the Industrial Regulatory Zone as of May 1, 1991.

[Amended by Ord. 875, provisions eff. 8/3/93.]

Section 110.226.25 Road Access Permits. Prior to final approval of any development proposed within the boundaries of the Palomino Valley General Improvement District, the applicant shall obtain any needed road access permit from the appropriate entity.

[Amended by Ord. 875, provisions eff. 8/3/93.]

Section 110.226.30 Ornamental Water Features. The use of groundwater for new ornamental surface water features such as ponds and fountains is prohibited.

Section 110.226.35 Disposal of Sludge. The disposal of sludge shall be restricted to land application for agricultural purposes only. Sludge shall not be disposed of as landfill material.

Division Three - Regulation of Uses
CONTENTS

	Page
Regulation of Uses: Title and Contents	300-1
Allowed Uses	302-1
Use Classification System	304-1
Accessory Uses and Structures	306-1
Home Occupations	308-1
Temporary Uses and Structures	310-1
Fabricated Housing	312-1
Manufactured Home Parks	314-1
Recreational Vehicle Parks	316-1
Vacation Time Share Units	318-1
Bed and Breakfast Establishments	320-1
Group Care Facilities	322-1
Communication Facilities	324-1
Wind Machines	326-1
Geothermal Resources	328-1
Domestic Pets and Livestock	330-1
Aggregate Facilities	332-1
Mining	334-1
Affordable Housing Incentives (Reserved for Future Ordinance)	336-1
Child Daycare Development Incentives (Reserved for Future Ordinance)	338-1
Industrial Performance Standards	340-1

LIST OF TABLES

Table 110.302.05.1: Table of Uses (Residential Use Types)	302-2
Table 110.302.05.2: Table of Uses (Civic Use Types)	302-3
Table 110.302.05.3: Table of Uses (Commercial Use Types)	302-4
Table 110.302.05.4: Table of Uses (Industrial Use Types)	302-7
Table 110.302.05.5: Table of Uses (Agricultural Use Types)	302-8
Table 110.324.50.1: Antenna Placement Standards	324-11
Table 110.324.55.1: Significant Gap Antenna Pole Height	324-14

Article 300
REGULATION OF USES: TITLE AND CONTENTS

Sections:

110.300.00	**Title**
110.300.05	**Contents**

Section 110.300.00 Title. Division Three of Chapter 110, Development Code, is entitled Regulation of Uses.

Section 110.300.05 Contents. Division Three consists of the following articles:

(a) ARTICLE 300 REGULATION OF USES: TITLE AND CONTENTS

(b) ARTICLE 302 ALLOWED USES

(c) ARTICLE 304 USE CLASSIFICATION SYSTEM

(d) ARTICLE 306 ACCESSORY USES AND STRUCTURES

(e) ARTICLE 308 HOME OCCUPATIONS

(f) ARTICLE 310 TEMPORARY USES AND STRUCTURES

(g) ARTICLE 312 FABRICATED HOUSING

(h) ARTICLE 314 MANUFACTURED HOME PARKS

(i) ARTICLE 316 RECREATIONAL VEHICLE PARKS

(j) ARTICLE 318 VACATION TIME SHARE UNITS

(k) ARTICLE 320 BED AND BREAKFAST ESTABLISHMENTS

(l) ARTICLE 322 GROUP CARE FACILITIES

(m) ARTICLE 324 COMMUNICATION FACILITIES

(n) ARTICLE 326 WIND MACHINES

(o) ARTICLE 328 GEOTHERMAL RESOURCES

(p) ARTICLE 330 DOMESTIC PETS AND LIVESTOCK

(q) ARTICLE 332 AGGREGATE FACILITIES

(r) ARTICLE 334 MINING

(s) ARTICLE 336 AFFORDABLE HOUSING INCENTIVES (Reserved for Future Ordinance)

(t) ARTICLE 338 CHILD DAYCARE DEVELOPMENT INCENTIVES (Reserved for Future Ordinance)

(u) ARTICLE 340 INDUSTRIAL PERFORMANCE STANDARDS

[Amended by Ord. 939, provisions eff. 11/1/95; Ord. 1004, provisions eff. 1/30/98; Ord. 1238, provisions eff. 6-4-04.]

Article 302
ALLOWED USES

Sections:

110.302.00	**Purpose**
110.302.05	**Table of Uses**
110.302.10	**Use Classification System**
110.302.15	**Types of Review**
110.302.20	**Projects of Regional Significance**
110.302.25	**Accessory Uses and Structures**
110.302.30	**Temporary Uses and Structures**
110.302.35	**Uses in Airport Critical Areas**
110.302.40	**Uses in River Corridor**

Section 110.302.00 Purpose. The purpose of this article, Article 302, Allowed Uses, is to prescribe the uses that are allowed in each regulatory zone. Any variance to the Table of Uses (Table 110.302.05.1 through Table 110.302.05.5) would constitute an action that would allow a land use in contravention to the applicable regulatory zone. Such actions are prohibited by Article 804, Variances, and a variance application cannot be accepted.

[Amended by Ord. 1040, provisions eff. 11/1/98.]

Section 110.302.05 Table of Uses. The uses that are allowed in each regulatory zone are set forth in Table 110.302.05.1 through Table 110.302.05.5. The regulatory zones are indicated in Table 110.302.05.1 through Table 110.302.05.5 as follows:

(a) Low Density Rural is indicated as "LDR";

(b) Medium Density Rural is indicated as "MDR";

(c) High Density Rural is indicated as "HDR";

(d) Low Density Suburban is indicated as "LDS";

(e) Medium Density Suburban is indicated as "MDS";

(f) High Density Suburban is indicated as "HDS";

(g) Low Density Urban is indicated as "LDU";

(h) Medium Density Urban is indicated as "MDU";

(i) High Density Urban is indicated as "HDU";

(j) General Commercial is indicated as "GC";

(k) Neighborhood Commercial/Office is indicated as "NC";

(l) Tourist Commercial is indicated as "TC";

(m) Industrial is indicated as "I";

(n) Public/Semi-Public Facilities is indicated as "PSP";

(o) Parks and Recreation is indicated as "PR";

(p) Open Space is indicated as "OS";

(q) General Rural is indicated as "GR"; and

(r) General Rural Agricultural is indicated as "GRA."

Table 110.302.05.1

TABLE OF USES (Residential Use Types)
(See Sections 110.302.10 and 110.302.15 for explanation)

Residential Use Types (Section 110.304.15)	LDR	MDR	HDR	LDS/ LDS 2	MDS/ MDS 4	HDS	LDU	MDU	HDU	GC	NC	TC	I	PSP	PR	OS	GR	GRA
Family Residential																		
Attached Accessory Dwelling	A	A	A	A	A	A	A	A	A	--	--	--	--	--	--	--	A	A
Detached Accessory Dwelling	AR	AR	AR	AR	S_2	--	--	--	--	--	--	--	--	--	--	--	A	A
Detached Accessory Structure	A	A	A	A	A	A	A	A	A	--	A	--	--	--	--	--	A	A
Duplex	--	--	--	P	P	P	P	P	A	--	S_2	--	--	--	--	--	--	--
Multi Family	--	--	--	--	--	--	P	P	A	--	S_2	--	--	--	--	--	--	--
Single Family, Attached	--	--	--	A	A	A	A	A	A	--	S_2	--	--	--	P	--	--	A
Single Family, Detached	A	A	A	A	A	A	A	S_2	S_2	--	S_2	--	--	--	P	--	A	A
Non-municipal Air Strips and Glider Ports (Accessory Use)	S_2	--	--	--	--	--	--	--	--	--	--	S_2	S_2	S_2	--	--	S_2	--
Personal Landing Field (Accessory Use)	S_2	--	--	--	--	--	--	--	--	--	--	S_2	S_2	S_2	--	--	S_2	--
Manufactured Home Parks	*	*	*	*	*	S_2	S_2	*	*	--	--	--	--	--	--	--	*	--
Group Home	A	A	A	A	A	A	A	A	A	--	S_2	--	--	--	P	--	A	A

Key: -- = Not allowed; A = Allowed; AR = Administrative Review pursuant to Section 110.306.25(i); P = Administrative Permit; PR = Park Commission Approval pursuant to 110.104.40(c); S_1 = Planning Commission Special Use Permit; S_2 = Board of Adjustment Special Use Permit; * = Allowed with a Board of Adjustment Special Use Permit in areas designated Trailer (TR) Overlay zone prior to adoption of this Development Code.

Sources: Sedway Cooke Associates and Washoe County Department of Community Development

Table 110.302.05.2

TABLE OF USES (Civic Use Types)
(See Sections 110.302.10 and 110.302.15 for explanation)

Civic Use Types (Section 110.304.20)	LDR	MDR	HDR	LDS/ LDS 2	MDS/ MDS 4	HDS	LDU	MDU	HDU	GC	NC	TC	I	PSP	PR	OS	GR	GRA
Administrative Services	--	--	--	--	--	--	P	P	P	A	A	A	A	A	P	--	--	--
Child Care																		
Family Daycare	A	A	A	A	A	A	A	A	A	--	P	--	--	--	--	--	--	A
Large-Family Daycare	S_2	S_2	S_2	S_2	S_2	S_2	S_2	S_2	S_2	--	S_2	--	--	--	--	--	P	S_2
Child Daycare	S_2	S_2	S_2	S_2	S_2	S_2	S_2	S_2	S_2	P	P	P	P	P	S_2	--	S_2	--
Community Center	--	--	--	--	--	--	P	P	P	A	S_2	A	--	A	A	--	--	--
Community Garden	A	A	A	A	A	A	A	A	A	A	A	A	A	A	A	A	A	A
Convalescent Services	--	--	--	S_2	S_2	S_2	P	P	P	P	S_2	--	--	P	--	--	--	--
Cultural and Library Services	S_2	S_2	S_2	S_2	S_2	S_2	S_2	A	A	A	A	A	--	A	A	--	A	S_2
Education	S_2	S_2	S_2	S_2	S_2	S_2	S_2	S_2	S_2	S_2	S_2	S_2	--	S_2	S_2	--	S_2	S_2
Group Care Facility	S_2	S_2	S_2	S_2	S_2	S_2	S_2	S_2	S_2	P	P	--	--	--	--	--	S_2	--
Hospital Services	--	--	--	--	--	--	--	--	--	A	S_2	--	--	A	--	--	--	S_2
Major Services and Utilities																		
Utility Services	S_2	S_2	S_2	S_2	S_2	S_2	S_2	S_2	S_2	S_2	S_2	S_2	S_2	S_2	S_2	S_2	S_2	--
Major Public Facilities	--	--	--	--	--	--	--	--	--	S_2	--	S_2	S_2	S_2	S_2	--	S_2	--
Nature Center	--	--	--	--	--	--	--	--	--	S_2	--	S_2	--	--	S_2	--	S_2	--
Parks and Recreation																		
Active Recreation	PR	PR	PR	PR	PR	PR	PR	PR	PR	PR	PR	PR	PR	A	A	--	PR	S_2
Passive Recreation	A	A	A	A	A	A	A	A	A	A	A	A	A	A	A	A	A	A
Postal Services	--	--	--	--	--	--	P	P	P	A	A	A	A	A	--	--	--	--
Public Parking Services	--	--	--	--	--	--	--	A	A	A	A	A	A	A	--	--	--	--
Public Service Yard	--	--	--	--	--	--	--	--	--	--	--	--	A	S_2	--	--	S_2	A
Religious Assembly	S_2	S_2	S_2	S_2	S_2	S_2	S_2	S_2	S_2	P	P	P	P	P	P	--	S_2	A
Safety Services	S_2	S_2	S_2	S_2	S_2	S_2	S_2	S_2	S_2	S_2	S_2	S_2	S_2	S_2	S_2	--	S_2	--

Key: -- = Not allowed; A = Allowed; P = Administrative Permit; PR = Park Commission Approval pursuant to Section 110.104.40(c); S_1 = Planning Commission Special Use Permit; S_2 = Board of Adjustment Special Use Permit

Sources: Sedway Cooke Associates and Washoe County Department of Community Development

Table 110.302.05.3

TABLE OF USES (Commercial Use Types)
(See Sections 110.302.10 and 110.302.15 for explanation)

Commercial Use Types (Section 110.304.25)	LDR	MDR	HDR	LDS/ LDS 2	MDS/ MDS 4	HDS	LDU	MDU	HDU	GC	NC	TC	I	PSP	PR	OS	GR	GRA
Administrative Offices	--	--	--	--	--	--	P	P	P	A	A	A	A	A	P	--	--	--
Adult Characterized Business (see Chapter 25, Washoe County Code)	--	--	--	--	--	--	--	--	--	--	--	--	--	--	--	--	--	--
Animal Sales and Services																		
Commercial Kennels	S_2	S_2	S_2	S_2	--	--	--	--	--	S_2	--	--	S_2	--	--	--	S_2	S_2
Commercial Stables	S_2	S_2	S_2	S_2	--	--	--	--	--	--	--	S_2	--	--	S_2	--	S_2 *See Article 226 for Warm Springs parcels.	S_2
Dog Training Services (see Article 330	A	A	A	A	A	A	A	A	A	A	A	A	A	A	A	A	A	A
Grooming and Pet Stores	--	--	--	S_2	S_2	S_2	S_2	S_2	S_2	A	A	--	--	--	--	--	--	--
Pet Cemeteries	P	P	P	--	--	--	--	--	--	S_2	--	--	--	A	--	--	P	--
Veterinary Services, Agricultural	P	P	P	P	--	--	--	--	--	S_2	--	--	--	--	--	--	S_2	S_2
Veterinary Services, Pets	--	--	--	S_2	S_2	S_2	S_2	S_2	S_2	A	A	--	P	--	--	--	--	S_2
Automotive and Equipment																		
Automotive Repair	--	--	--	--	--	--	--	--	--	P	--	--	A	--	--	--	--	--
Automotive Sales and Rentals	--	--	--	--	--	--	--	--	S_2	A	A	A	A	--	--	--	--	--
Cleaning	--	--	--	--	--	--	S_2	S_2	S_2	A	A	A	A	--	--	--	--	--
Commercial Parking	--	--	--	--	--	--	P	P	P	A	A	A	A	P	--	--	--	--
Equipment Repair and Sales	--	--	--	--	--	--	--	--	--	S_2	--	--	A	--	--	--	--	--
Fabricated Housing Sales	--	--	--	--	--	--	--	--	--	A	--	--	A	--	--	--	--	--
Storage of Operable Vehicles	--	--	--	--	--	--	--	--	--	S_2	--	--	A	--	--	--	--	--
Truck Stops	--	--	--	--	--	--	--	--	--	S_2	--	S_2	S_2	--	--	--	--	--
Building Maintenance Services	--	--	--	--	--	--	--	--	--	A	A	--	A	--	--	--	--	--
Commercial Centers																		
Neighborhood Centers	--	--	--	S_2	S_2	S_2	P	P	P	A	A	A	A	--	--	--	--	--
Community Centers	--	--	--	--	--	--	--	--	--	S_2	S_2	S_2	--	--	--	--	--	--
Regional Centers	--	--	--	--	--	--	--	--	--	S_2	--	S_2	--	--	--	--	--	--
Commercial Educational Services	--	--	--	--	--	--	P	P	P	A	A	--	A	A	--	--	--	--
Commercial Recreation																		
Commercial Campground Facilities/RV Park	--	--	--	--	--	--	--	--	--	--	--	S_2	--	--	S_2	--	S_2	S_2
Destination Resorts	--	--	--	--	--	--	--	--	--	--	--	S_2	--	--	S_2	--	S_2	S_2
Indoor Entertainment	--	--	--	--	--	--	--	--	--	A	P	A	--	P	--	--	--	--
Indoor Sports and Recreation	--	--	--	--	--	--	--	--	--	S_2	S_2	P	S_2	P	P	--	--	--

Key: -- = Not allowed; A = Allowed; P = Administrative Permit; PR = Park Commission Approval pursuant to Section 110.104.40(c); S_1 = Planning Commission Special Use Permit; S_2 = Board of Adjustment Special Use Permit

* The provisions listed in Table 110.302.05.3 requiring a special use permit for Commercial Stables [as defined in Section 110.304.25(c)(2)] in GR and GRA are hereby modified to be consistent with Article 226, Warm Springs Area.

Table 110.302.05.3 (continued)

TABLE OF USES (Commercial Use Types)
(See Sections 110.302.10 and 110.302.15 for explanation)

Commercial Use Types (Section 110.304.25)	LDR	MDR	HDR	LDS/ LDS 2	MDS/ MDS 4	HDS	LDU	MDU	HDU	GC	NC	TC	I	PSP	PR	OS	GR	GRA
Limited Gaming Facilities	--	--	--	--	--	--	--	--	--	P	P	P	S_2	--	--	--	--	--
Marinas	--	--	--	--	--	--	--	--	--	P	--	P	--	P	P	--	P	S_2
Outdoor Entertainment	--	--	--	--	--	--	--	--	--	--	--	S_2	S_2	--	S_2	--	--	--
Outdoor Sports and Recreation	S_2	S_2	S_2	S_2	S_2	S_2	S_2	S_2	S_2	P	P	P	P	S_2	P	--	P	S_2
Outdoor Sports Club	S_2	--	--	--	--	--	--	--	--	--	--	S_2	--	S_2	P	--	S_2	S_2
Unlimited Gaming Facilities	--	--	--	--	--	--	--	--	--	--	--	S_2	--	--	--	--	--	--
Communication Facilities																		
Commercial Antennas	S_2	S_2	S_2	--	--	--	--	--	--	S_2	S_2	--	S_2	S_2	--	--	S_2	--
Satellite Dish Antennas	See Article 324																	
Wireless Communication Facilities	See Article 324																	
Construction Sales and Services	--	--	--	--	--	--	--	--	--	S_2	--	--	A	--	--	--	--	--
Continuum of Care Facilities, Seniors	--	--	--	--	S_2	S_2	S_2	S_2	S_2	S_2	S_2	--	--	--	--	--	--	--
Convention and Meeting Facilities	--	--	--	--	--	--	--	--	--	P	P	P	--	P	S_2	--	--	--
Data Center	--	--	--	--	--	--	--	--	--	S_2	S_2	S_2	A	S_2	--	--	S_2	--
Eating and Drinking Establishments																		
Convenience	--	--	--	--	--	--	S_2	S_2	S_2	A	A	A	P	--	--	--	--	--
Full Service	--	--	--	--	--	--	S_2	S_2	S_2	A	A	A	P	--	--	--	--	--
Financial Services	--	--	--	--	--	--	S_2	S_2	S_2	A	A	A	P	--	--	--	--	--
Funeral and Internment Services																		
Cemeteries	P	P	P	--	--	--	--	--	--	S_2	--	--	--	A	--	--	P	S_2
Undertaking	--	--	--	--	--	--	--	--	--	A	A	--	--	--	--	--	--	--
Gasoline Sales and Service Stations	--	--	--	--	--	--	S_2	S_2	S_2	A	A	A	A	--	--	--	S_2	--
Helicopter Services																		
Heliport	--	--	--	--	--	--	--	--	--	S_2	--	--	S_2	S_2	--	--	S_2	--
Helistop	S_2	--	--	--	--	--	--	--	--	S_2	S_2	S_2	S_2	S_2	--	--	S_2	--
Liquor Manufacturing	--	--	--	--	--	--	P	P	P	A	P	A	A	--	--	--	--	--
Liquor Sales																		
Off-Premises	--	--	--	--	--	--	P	P	P	A	A	A	P	--	--	--	--	--
On-Premises	--	--	--	--	--	--	P	P	P	A	P	A	P	--	--	--	--	--
Lodging Services																		
Bed and Breakfast Inns	S_2	S_2	S_2	S_2	S_2	S_2	S_2	S_2	S_2	S_2	--	P	--	--	--	--	S_2	S_2
Condominium Hotel	--	--	--	--	--	--	--	--	--	A	S_2	A	--	--	--	--	--	--
Hostels	--	--	--	--	--	--	--	--	--	--	--	P	--	--	P	--	--	--
Hotels and Motels	--	--	--	--	--	--	--	--	--	A	S_2	A	--	--	--	--	--	--
Vacation Time Shares	--	--	--	--	--	--	--	--	--	--	--	P	--	--	--	--	--	--

Key: -- = Not allowed; A = Allowed; P = Administrative Permit; PR = Park Commission Approval pursuant to Section 110.104.40(c); S_1 = Planning Commission Special Use Permit; S_2 = Board of Adjustment Special Use Permit

Table 110.302.05.3 (continued)

TABLE OF USES (Commercial Use Types)
(See Sections 110.302.10 and 110.302.15 for explanation)

Commercial Use Types (Section 110.304.25)	LDR	MDR	HDR	LDS/ LDS 2	MDS/ MDS 4	HDS	LDU	MDU	HDU	GC	NC	TC	I	PSP	PR	OS	GR	GRA
Medical Marijuana Establishments																		
Medical Marijuana Cultivation Facility	--	--	--	--	--	--	--	--	--	A	--	--	A	--	--	--	--	--
Facility for the Production of Edible Marijuana or Marijuana-infused Products	--	--	--	--	--	--	--	--	--	A	--	--	A	--	--	--	--	--
Independent Testing Laboratory	--	--	--	--	--	--	--	--	--	A	--	--	A	--	--	--	--	--
Medical Marijuana Dispensary	--	--	--	--	--	--	--	--	--	A	A	A	A	--	--	--	--	--
Medical Services	--	--	--	--	--	--	S_2	S_2	S_2	A	A	--	--	A	--	--	--	--
Nursery Sales																		
Retail	--	--	--	--	--	--	--	--	--	A	A	--	A	--	--	--	--	--
Wholesale	S_2	S_2	S_2	--	--	--	--	--	--	A	--	--	A	--	--	--	S_2	A
Personal Services	--	--	--	--	--	--	P	P	P	A	A	A	--	--	--	--	--	--
Personal Storage	--	--	--	--	--	--	S_2	S_2	S_2	A	S_2	--	A	--	--	--	--	--
Professional Services	--	--	--	--	--	--	P	P	P	A	A	--	P	--	--	--	--	--
Recycle Center																		
Full Service Recycle Center	--	--	--	--	--	--	--	--	--	S_2	--	--	A	--	--	--	--	--
Remote Collection Facility	S_2	S_2	S_2	S_2	S_2	S_2	P	P	P	P	P	P	A	P	P	--	--	--
Residential Hazardous Substance Recycle Center	--	--	--	--	--	--	--	--	--	S_2	--	--	S_2	--	--	--	--	--
Repair Services, Consumer	--	--	--	--	--	--	--	--	--	A	A	--	A	--	--	--	--	--
Retail Sales																		
Convenience	--	--	--	S_2	S_2	S_2	S_2	S_2	S_2	A	A	A	A	--	--	--	--	--
Specialty Stores	--	--	--	--	--	--	--	--	--	A	P	A	--	--	--	--	--	--
Comparison Shopping Centers	--	--	--	--	--	--	--	--	--	A	--	A	--	--	--	--	--	--
Secondhand Sales	--	--	--	--	--	--	--	--	--	A	--	--	--	--	--	--	--	--
Transportation Services	--	--	--	--	--	--	--	--	--	A	A	A	A	--	--	--	--	--

Key: -- = Not allowed; A = Allowed; P = Administrative Permit; PR = Park Commission Approval pursuant to Section 110.104.40(c); S_1 = Planning Commission Special Use Permit; S_2 = Board of Adjustment Special Use Permit

Sources: Sedway Cooke Associates and Washoe County Department of Community Development

[This space intentionally left blank. Article 302 continues next page.]

Table 110.302.05.4

TABLE OF USES (Industrial Use Types)
(See Sections 110.302.10 and 110.302.15 for explanation)

Industrial Use Types (Section 110.304.30)	LDR	MDR	HDR	LDS/ LDS 2	MDS/ MDS 4	HDS	LDU	MDU	HDU	GC	NC	TC	I	PSP	PR	OS	GR	GRA
Aggregate Facilities																		
Permanent	S_2	--	--	--	--	--	--	--	--	--	--	--	S_2	--	--	--	S_2	--
Temporary	See Article 332																	
Caretaker's Residence																		
Attached	--	--	--	--	--	--	--	--	--	--	--	--	A	--	--	--	--	--
Detached	--	--	--	--	--	--	--	--	--	--	--	--	P	--	--	--	--	--
Custom Manufacturing	S_2	S_2	S_2	--	--	--	--	--	--	S_2	--	S_2	A	--	--	--	S_2	--
Energy Production																		
Non-Renewable*	S_2	S_2	--	--	--	--	--	--	--	--	--	--	S_2	S_2	--	S_2	S_2	--
Renewable*	S_2	S_2	--	--	--	--	--	--	--	S_2	--	S_2	S_2	S_2	--	S_2	S_2	S_2
General Industrial																		
Limited	--	--	--	--	--	--	--	--	--	--	--	--	A	--	--	--	--	--
Intermediate	--	--	--	--	--	--	--	--	--	--	--	--	A	--	--	--	--	--
Heavy	--	--	--	--	--	--	--	--	--	--	--	--	S_2	--	--	--	--	--
High Technology Industry	--	--	--	--	--	--	--	--	--	S_2	S_2	--	A	--	--	--	S_2	--
Inoperable Vehicle Storage	--	--	--	--	--	--	--	--	--	--	--	--	S_2	--	--	--	--	--
Laundry Services	--	--	--	--	--	--	--	--	--	P	--	--	A	--	--	--	--	--
Mining Operations	S_2	--	--	--	--	--	--	--	--	--	--	--	S_2	--	--	--	S_2	--
Petroleum Gas Extraction	--	--	--	--	--	--	--	--	--	--	--	--	S_2	--	--	S_2	S_2	--
Salvage Yards	--	--	--	--	--	--	--	--	--	--	--	--	S_2	--	--	--	--	--
Wholesaling, Storage and Distribution																		
Light	--	--	--	--	--	--	--	--	--	--	--	--	A	--	--	--	--	--
Heavy	--	--	--	--	--	--	--	--	--	--	--	--	P	--	--	--	--	--

Key: -- = Not allowed; A = Allowed; P = Administrative Permit; PR = Park Commission Approval pursuant to Section 110.104.40(c); S_1 = Planning Commission Special Use Permit; S_2 = Board of Adjustment Special Use Permit

Note: * If a special use permit for an energy production project meets the criteria for a project of regional significance, that special use permit will be reviewed by the Washoe County Planning Commission.

Sources: Sedway Cooke Associates and Washoe County Department of Community Development

Table 110.302.05.5

TABLE OF USES (Agricultural Use Types)
(See Sections 110.302.10 and 110.302.15 for explanation)

Agricultural Use Types (Section 110.304.15)	LDR	MDR	HDR	LDS/ LDS 2	MDS/ MDS 4	HDS	LDU	MDU	HDU	GC	NC	TC	I	PSP	PR	OS	GR	GRA
Agricultural Processing	--	--	--	--	--	--	--	--	--	--	--	--	A	--	--	--	S_2	A
Agricultural Sales	S_2	S_2	S_2	S_2	--	--	--	--	--	A	--	--	A	--	--	--	S_2	A
Animal Production	A	A	A	A	--	--	--	--	--	--	--	--	--	--	S_2	S_2	A	A
Animal Slaughtering, Agricultural	A	A	A	A	--	--	--	--	--	--	--	--	--	--	A	A	A	A
Animal Slaughtering, Commercial	--	--	--	--	--	--	--	--	--	--	--	--	S_2	--	--	--	--	--
Animal Slaughtering, Mobile	S_2	S_2	S_2	S_2	--	--	--	--	--	--	--	--	--	--	--	--	S_2	S_2
Crop Production	A	A	A	A	A	--	--	--	--	A	A	--	--	--	PR	A	A	A
Forest Products	S_2	S_2	S_2	--	--	--	--	--	--	--	--	--	--	--	--	S_2	P	--
Game Farms	S_2	S_2	S_2	--	--	--	--	--	--	--	--	--	--	--	--	S_2	S_2	S_2
Produce Sales	S_2	S_2	S_2	S_2	--	--	--	--	--	--	--	--	--	--	--	--	A	A

Key: -- = Not allowed; A = Allowed; P = Administrative Permit; PR = Park Commission Approval pursuant to Section 110.104.40(c); S_1 = Planning Commission Special Use Permit; S_2 = Board of Adjustment Special Use Permit

Sources: Sedway Cooke Associates and Washoe County Department of Community Development

[Amended by Ord. 875, provisions eff. 8/3/93; Ord. 890, provisions eff. 11/29/93; Ord. 895, provisions eff. 1/24/94; Ord. 899, provisions eff. 5/31/94; Ord. 906, provisions eff. 7/27/94; Ord. 959, provisions eff. 7/26/96; Ord. 1004, provisions eff. 1/30/98; Ord. 1023, provisions eff. 7/1/98; Ord. 1039, provisions eff. 11/1/98; Ord. 1097, provisions eff. 7/28/00; Ord. 1179, provisions eff. 12/6/02; Ord. 1238, provisions eff. 6/4/04; Ord. 1347, provisions eff. 11/2/07; Ord. 1368, provisions eff. 6/20/08; Ord. 1378, provisions eff. 8/1/08; Ord. 1433, provisions eff. 3/5/10; Ord. 1443, provisions eff. 7/26/10; Ord. 1447, provisions eff. 9/9/10; Ord. 1451, provisions eff. 1/1/11; Ord. 1475, provisions eff. 1/12/12; Ord. 1485, provisions eff. 3/27/12; Ord. 1494, provisions eff. 8/9/12; Ord. 1497, provisions eff. 10/5/12; Ord. 1513, provisions eff. 7/12/13; Ord. 1527, provisions eff. 4/18/14; Ord. 1712, provisions eff. 6/27/14; Ord. 1540, provisions eff. 9/5/14.]

Section 110.302.10 Use Classification System. The land use categories that are listed in Table 110.302.05.1 through Table 110.302.05.5 are described in Article 304, Use Classification System.

[Amended by Ord. 875, provisions eff. 8/3/93.]

Section 110.302.15 Types of Review. Table 110.302.05.1 through Table 110.302.05.5 indicate the types of review required as follows:

(a) Allowed Use. A letter "A" indicates that a use is allowed but the use shall comply with the provisions of the Development Code.

(b) Administrative Permit. A letter "P" indicates that a use is allowed only upon approval of an administrative permit pursuant to Article 808, Administrative Permits.

(c) Planning Commission Special Use Permit. A letter "S_1" indicates that a use is allowed only upon approval of a special use permit approved by the Planning Commission pursuant to Article 810, Special Use Permits.

(d) Board of Adjustment Special Use Permit. A letter "S_2" indicates that a use is allowed only upon approval of a special use permit approved by the Board of Adjustment pursuant to Article 810, Special Use Permits.

(e) Uses Not Allowed. A designation "--" indicates that a use is not allowed within the regulatory zone.

[Amended by Ord. 875, provisions eff. 8/3/93.]

Section 110.302.20 Projects of Regional Significance. Projects of regional significance are subject to the provisions of Article 812, Projects of Regional Significance, which requires additional review.

Section 110.302.25 Accessory Uses and Structures. Accessory uses and accessory structures are governed by Article 306, Accessory Uses and Structures.

[Section 110.302.25 renamed from "Accessory Uses" and amended by Ord. 875, provisions eff. 8/3/93.]

Section 110.302.30 Temporary Uses and Structures. Temporary uses and temporary structures are governed by Article 310, Temporary Uses and Structures.

[Section 110.302.30 renamed from "Temporary Uses" and amended by Ord. 875, provisions eff. 8/3/93.]

Section 110.302.35 Uses in Airport Critical Areas. In addition to the provisions of this article, uses with the following characteristics shall be prohibited in an airport critical area, as adopted in the Washoe County Master Plan:

(a) High Density. Uses with high residential, labor or other high population concentration characteristics of a permanent or extended duration.

(b) Special Populations. Uses that concentrate people unable to respond to emergency situations such as children, elderly and handicapped persons.

(c) Areawide Utilities. Uses that involve the provision of utilities and services provided for areawide population where disruption would have an adverse impact (such as telephone, gas, etc.).

(d) Hazardous Characteristics. Uses that involve explosives, fire, toxic materials, corrosive materials or other hazardous characteristics.

(e) Hazards to Aircraft. Uses that pose particular hazards to aircraft, as identified and adopted by the Executive Board of the Airport Authority of Washoe County and adopted herein.

[Amended by Ord. 875, provisions eff. 8/3/93; Ord. 1447, provisions eff. 9/9/10.]

Section 110.302.40 Uses in River Corridor. In addition to the provisions of this article, all uses in a river corridor, as designated in the Washoe County Master Plan, shall comply with the provisions of Article 430, River Corridor Development.

[Amended by Ord. 875, provisions eff. 8/3/93; Ord. 1447, provisions eff. 9/9/10.]

[Section 110.302.45 entitled "Excavation and Grading" added by Ord. 875, provisions eff. 8/3/93 and repealed by Ord. 1236, provisions eff. 5/21/04.]

Article 304
USE CLASSIFICATION SYSTEM

Sections:

110.304.00	**Purpose**
110.304.05	**Classification Rules**
110.304.10	**Authority and Responsibility**
110.304.15	**Residential Use Types**
110.304.20	**Civic Use Types**
110.304.25	**Commercial Use Types**
110.304.30	**Industrial Use Types**
110.304.35	**Agricultural Use Types**

Section 110.304.00 Purpose. The purpose of this article, Article 304, Use Classification System, is to classify uses according to a limited number of use types on the basis of common functional, product or compatibility characteristics, thereby providing a basis for regulation of uses in accordance with criteria which are directly relevant to the public interest. These provisions shall apply throughout the Development Code.

Section 110.304.05 Classification Rules. Uses will be classified into use types based upon the descriptions in Section 110.304.15 through Section 110.304.35, inclusive. The classifications shall comply with the provisions of this section.

(a) Types of Uses Regulated. Only principal uses are included within the use classification system. Accessory uses and temporary uses are regulated by Article 306, Accessory Uses and Structures, and Article 310, Temporary Uses and Structures, respectively.

(b) Typical Uses within Use Types. The description of the use types in this article often contain usual and customary uses classified within that use type. These usual and customary uses are examples and are not meant to include all uses that may properly be classified within the use type.

(c) Classifying New Uses. New uses shall be classified into use types based upon the description of the use types and upon characteristics similar to other uses already classified within the use type, subject to the applicable provisions of subsection (d) of the section. The North American Industry Classification System shall be used to help define new uses when deemed appropriate by the Director of Community Development.

(d) Classifying Several Uses on the Same Parcel. The principal uses conducted on a single parcel shall be classified separately.

[Amended by Ord. 875, provisions eff. 8/3/93; Ord. 1433, provisions eff. 3/5/10.]

Section 110.304.10 Authority and Responsibility. The Director of Community Development shall have the following authority and responsibilities with respect to the use classification system:

(a) Classifying Uses. The Director of Community Development shall have the authority to classify uses according to use types or to determine that a use does not fit under any use type and, therefore, is not permitted. The classification of a use is an administrative decision without notice and hearing, except that an applicant can appeal the decision pursuant to Article 808, Administrative Permits.

(b) List of Uses. The Director of Community Development shall develop and maintain an administrative list of common uses and the use types into which they are classified.

Section 110.304.15 Residential Use Types. Residential use types include the occupancy of living accommodations on a wholly or primarily non-transient basis but exclude institutional living arrangements providing twenty-four-hour skilled nursing or medical care and those providing forced residence, such as asylums and prisons.

(a) Family Residential. The family residential use type refers to the occupancy of living quarters by one (1) or more families. The following are family residential use types:

(1) Attached Accessory Dwelling Unit. An attached accessory dwelling unit is a portion of or an addition to a single family main dwelling that has been designed or configured to be used as a separate and independent dwelling unit. An attached accessory dwelling unit includes, at a minimum, permanent kitchen and bathroom (i.e. a toilet) facilities, but may also include living, sleeping, and eating facilities, all separated from the main unit by walls or ceilings and accessed through a lockable exterior or interior door. The attached accessory dwelling unit shall not exceed forty (40) percent of the total square footage of the main dwelling unit or 1,000 square feet, whichever is smaller. The square footage of garages, crawl spaces, cellars, attics, or basements not designed for human occupancy shall not be included when calculating the total square footage of the main dwelling unit, unless such areas have been legally converted into habitable space. An attached accessory dwelling may be created by converting part of, or adding on to, an existing single family main dwelling. To be considered attached, the accessory dwelling unit must abut (i.e. be on the opposite side of a wall or ceiling) the habitable space of the main dwelling, or the ceiling of a garage attached to the main dwelling. Incidental and accessory features such as trellises, decks, patios, breezeways, or tool sheds will not be considered as establishing an attached structure/dwelling. Typical uses include guest rooms, guest apartments and "granny flats."

(2) Detached Accessory Dwelling Unit. A detached accessory dwelling unit refers to a dwelling unit on the same lot as the main dwelling unit, but which is physically separated from the main dwelling unit. A detached accessory dwelling unit is designed and configured to provide independent living facilities for one or more persons, and includes, at a minimum, permanent kitchen and bathroom (i.e. a toilet) facilities, but which may also include living, sleeping, and eating facilities. Except in the Medium Density Suburban (MDS) Regulatory Zone, a detached accessory dwelling unit shall not exceed fifteen hundred (1,500) square feet or fifty (50) percent of the total square footage of the main dwelling unit, whichever is smaller. In the Medium Density Suburban (MDS) Regulatory Zone, the detached accessory dwelling unit shall not exceed

eight hundred (800) square feet or fifty (50) percent of the total square footage of the main dwelling unit, whichever is smaller. The square footage of garages, crawl spaces, cellars, attics, or basements not designed for human occupancy shall not be included when calculating the total square footage of the main dwelling unit, unless such areas have been legally converted into habitable space. Typical uses include guest houses, second units, "granny flats" and caretaker's quarters.

(3) Detached Accessory Structure. A detached accessory structure refers to a building or structure on the same lot as the main residential structure and devoted to a use incidental to that main residential structure. A detached accessory structure is not designed, configured, or used for human habitation. The detached accessory structure may be connected to water and wastewater systems subject to the recordation of a deed restriction prohibiting the use of the structure as a dwelling unit. Installation of both a kitchen (as defined in Article 902) and a toilet in a detached accessory structure shall render the structure as a dwelling unit and subject to the accessory dwelling unit provisions. Typical uses include storage buildings and sheds, barns and detached garages.

(4) Duplex. Duplex refers to the use of a parcel for two (2) dwelling units in a single structure.

(5) Multi-Family. Multi-family refers to the use of a parcel for three (3) or more dwelling units within one (1) or more buildings, including condominium developments.

(6) Single Family, Attached. Single family, attached refers to two (2) or more dwelling units constructed with a common or abutting wall with each located on its own separate parcel.

(7) Single Family, Detached. Single family, detached refers to the use of a parcel for only one (1) dwelling unit.

(b) Manufactured Home Parks. Manufactured home parks use type refers to the occupancy of a dwelling unit defined as a mobile home or a manufactured home and which is located in a site defined as a manufactured home park.

(c) Group Home. Group home use type refers to the occupancy of a single family dwelling by and the care for a group of ten (10) or fewer persons on a weekly or longer basis who are not defined as a family. The number of persons who reside in a group home excludes any caregivers and their family who also reside in the single family residence.

(1) This term includes specifically the following uses:

(i) Residential facility for groups; or

(ii) Home for individual residential care;

(iii) Halfway house for recovering alcohol or drug abusers;

(iv) Group foster home.

(2) The term group home does not include a child care institution or a facility for transitional living for released offenders.

[Amended by Ord. 875, provisions eff. 8/3/93; Ord. 959, provisions eff. 7/26/96; Ord. 1088, provisions eff. 1/28/00; Ord. 1156, provisions eff. 3/22/02; Ord. 1451, provisions eff. 1/1/11; Ord. 1485, provisions eff. 3/27/12.]

Section 110.304.20 Civic Use Types. Civic use types include the performance of utility, educational, cultural, medical, protective, governmental and other uses which are strongly vested with public or social importance.

(a) Administrative Services. Administrative services use type refers to consulting, record keeping, clerical or public contact services that deal directly with the citizen, together with incidental storage of necessary equipment and vehicles.

(b) Child Care. Child care use type refers to the use of a building or a portion thereof for the daytime care of individuals under eighteen (18) years of age. Child care use types are subject to the regulations and permission of the Washoe County Department of Social Services. This use type includes nursery schools, preschools, daycare centers and similar uses, but excludes those classified under education. The following are child care use types:

(1) Family Daycare. Family daycare refers to daycare services provided for six (6) or fewer full-time children, including those of the child care facility licensee who are under the age of seven (7) years, except that care may also be provided for up to three (3) additional part-time children for three (3) hours before school and three (3) hours after school, but only during periods when schools are in session, subject to the regulations and permission of the Washoe County Department of Social Services.

(2) Large-Family Daycare. Large-family daycare refers to daycare services provided for more than six (6) full-time children, including those of the child care facility licensee who are under the age of seven (7) years.

(3) Child Daycare. Child daycare refers to services providing non-medical care to any number of children in need of personal services or supervision, on less than a twenty-four (24) hour basis, but excluding services provided in a private dwelling.

(c) Community Center. Community center use type refers to recreational, social or multi-purpose uses within buildings with no fixed seats and occupancy limited to five hundred (500) or fewer. Typical uses include public or private, non-commercial clubs.

(d) Community Garden. Community garden use type refers to an area of land managed and maintained by a group to grow and harvest food crops, non-food crops (such as native plants), or ornamental crops (such as flowers), for personal or group use, consumption, or donation. Commercial sale of any crops produced in the community garden is prohibited. A community garden may be established in any regulatory zone subject to the following conditions:

(1) A signed affidavit shall be submitted to the division stating that the property owners, or the owners designated agent, agree to the proposed use. All

liability considerations are the responsibility of the property owner and the users of the property.

(2) A site plan shall be submitted to the division showing the areas to be cultivated, the location of any structures associated with the use, access points, how and where water will be obtained, and parking locations (if applicable).

(3) Structures smaller than or equal to two-hundred (200) square feet may be established on-site to support operation and maintenance of the community garden, provided they are located at least five (5) feet from any property line, do not block any easements, and do not impede sight visibility from or onto public streets. All tools, equipment, chemicals, or fertilizers stored on site shall be within a locked structure.

(4) Activities at the garden site shall be limited to daylight hours. The use of motorized equipment is limited to the hours of 8 a.m. to 5 p.m. No exterior lighting or illumination shall occur.

(5) Once all outdoor crops have been harvested for the current growing season, the area utilized shall be cleaned of any dead vegetation or supporting materials within thirty (30) days of the final harvest or by November 15, whichever comes first. Tilling of the dead vegetation back into the soil is allowed and meets this reauirement.

(e) Convalescent Services. Convalescent services use type refers to provision of bed care and in-patient services for persons requiring regular medical attention, but excludes a facility providing surgical or emergency medical services and a facility providing care for alcohol or drug addiction.

(f) Cultural and Library Services. Cultural and library services use type refers to non-profit, museum-like preservation and exhibition of objects of permanent interest in one or more of the arts and sciences, gallery exhibition of works of art or library collection of books, manuscripts, etc., for study and reading.

(g) Education. Education use type refers to educational services provided by public, private or parochial institutions, but excludes uses classified under commercial education services. Typical uses include elementary, junior high, and senior high schools, and junior colleges. Curriculum must be approved by the State Department of Education.

(h) Group Care Facility. Group care facility use type refers to an establishment that provides housing and living environment on a weekly or longer basis, for a group of persons not defined as a family or a group home. These facilities may provide life skill training, living assistance and supervised care service, but excludes medical treatment or uses classified under hospital services. This term includes specifically the following types of uses:

(1) Child Care Institution;

(2) Facility for transitional living for released offenders;

(3) Group home use types which accommodate more persons that permitted as a group home.

(i) Hospital Services. Hospital services use type refers to medical, psychiatric or surgical services for sick or injured persons primarily on an in-patient basis, including ancillary facilities for out-patient and emergency medical services, diagnostic services, training, research, administration and services to patients, employees or visitors.

(j) Major Services and Utilities.

(1) Utility Services. Utility services use type refers to the provision of electricity, water or other liquids, or gas, through wires, pipes or ditches through utility services involving major structures that have flexibility in location. Typical uses include natural gas transmission lines and substations, petroleum pipelines, and irrigation water ditches.

(2) Major Public Facilities. Major public facilities use type refers to public facilities that provide a significant service and have a substantial impact on the community. Typical uses are sanitary landfills, airports, and detention and correction facilities.

(k) Nature Center. Nature center use type refers to an area set aside for the public viewing and display of indigenous or exotic wildlife and/or indigenous or exotic plant life on either a for-profit or non-profit basis in a structured setting. Typical uses include zoos, wildlife sanctuaries, arboretums and gardens.

(l) Parks and Recreation. Parks and recreation use type refers to publicly owned parks or private not for profit recreation facilities and open space facilities within the recreation areas. These may be operated by a concessionaire. The following are park and recreation use types:

(1) Active Recreation. Active recreation refers to public park recreational uses that may have a potential impact on the area or adjacent land uses. Uses include participant sports and developed family recreational areas. Typical uses include group picnicking, tennis courts, swimming pools, softball diamonds, group campgrounds, and community centers operated by a public entity.

(2) Passive Recreation. Passive recreation refers to public park recreational uses that have no or a minimal impact on the area and adjacent land uses. Uses include hiking, nature study, wildlife refuge, fishing and viewing. No active uses, such as group picnicking, camping and sporting activities, are included.

(m) Postal Services. Postal services use type refers to mailing services, excluding major processing, as provided by the United States Postal Service, including branch post offices and public and private facilities.

(n) Public Parking Services. Public parking services use type refers to parking services involving building and lots which may be privately and/or publicly owned and operated and is assigned to meet a parking demand. Commercial parking is that which is not designated for any identified use.

(o) Public Service Yard. Public service yard use type refers to the use of a property operated by a governmental agency for the purposes of storing equipment and materials and includes ancillary office and meeting space for public service projects. A public service yard is limited to operations involving public road

construction, road maintenance, snow removal and operations supporting public parks construction and maintenance.

(p) Religious Assembly. Religious assembly use type refers to religious services involving public assembly such as customarily occurs in synagogues, temples and churches.

(q) Safety Services. Safety services use type refers to public safety and emergency services, including police and fire protection services, and emergency medical and ambulance services.

[Amended by Ord. 875, provisions eff. 8/3/93; Ord. 895, provisions eff. 1/24/94; Ord. 1023, provisions eff. 7/1/98; Ord. 1088, provisions eff. 1/28/00; Ord. 1156, provisions eff. 3/22/02; Ord. 1368, provisions eff. 6/20/08; Ord. 1433, provisions eff. 3/5/10; Ord. 1485, provisions eff. 3/27/12; Ord. 1540, provisions eff. 9/5/14.]

Section 110.304.25 Commercial Use Types. Commercial use types include the distribution and sale or rental of goods, and the provision of services other than those classified as civic or industrial use types. All permanent commercial uses are required to operate from a commercial structure.

(a) Administrative Offices. Administrative offices use type refers to offices or private firms or organizations which are primarily used for the provision of executive, management or administrative services. Typical uses include administrative offices and services including travel, secretarial services, telephone answering, photo-copying and reproduction, and business offices of public utilities, organizations and associations, or other use classifications when the service rendered is that customarily associated with administrative office services.

(b) Adult Characterized Business. Adult characterized business use type refers to uses defined in Washoe County Code, Chapter 25.

(c) Animal Sales and Services. Animal sales and services use type refers to establishments or places of business primarily engaged in animal-related sales and services. Animals kept as domestic pets or as accessory uses to a residential use are regulated by the accessory use provisions of Article 330, Domestic Pets and Livestock. The following are animal sales and services use types:

(1) Commercial Kennels. Commercial kennels refers to kennel services for dogs, cats and similar animals. Typical uses include commercial animal breeding with four (4) or more animals (dogs), boarding kennels, pet motels, or dog training centers. Commercial kennels require a parcel size minimum of two-and-one-half (2.5) acres regardless of the regulatory zone within which it is located.

(2) Commercial Stables. Commercial stables refers to boarding or raising of three (3) or more horses, but excludes horses used primarily for agricultural operations which are classified under animal production. Typical uses include commercial stables, riding clubs and riding instruction facilities.

(3) Grooming and Pet Stores. Grooming and pet stores refers to grooming or selling of dogs, cats and similar small animals. Typical uses include

dog bathing and clipping salons, pet grooming shops, or pet stores and shops.

(4) Pet Cemeteries. Pet cemeteries refers to services involving the preparation of dead animals for burial and the keeping of animal bodies on cemetery grounds as well as cremation of dead animals. Regardless of the regulatory zone in which it is located, a pet cemetery must be located on a parcel at least two-and-one-half (2.5) acres in size. Cremation of dead animals shall take place in an area designated only for the cremation of pets and which complies with any applicable federal or state statute or regulation or local ordinance.

(5) Veterinary Services, Agricultural. Veterinary services, agricultural refers to veterinary services specializing in the care and treatment of large animals. Veterinary services for small animals including pet clinics, dog and cat hospitals, or animal hospitals may be included to provide full veterinary services. Veterinary services, agriculture requires a parcel size minimum of two-and-one-half (2.5) acres regardless of the regulatory zone within which it is located. Typical uses include veterinary offices for livestock.

(6) Veterinary Services, Pets. Veterinary services, pets refers to veterinary services for small animals. Typical uses include pet clinics, dog and cat hospitals, or animal hospitals.

(7) Dog Training Services. Dog training services use type means the training of dogs with their owners or owners' designee, where both owner and dog participate in dog training classes.

(d) Automotive and Equipment. Automotive and equipment use type refers to establishments or places of business primarily engaged in automotive-related or heavy equipment sales or services. The following are automotive and equipment use types:

(1) Automotive Repair. Automotive repair refers to repair of automobiles and the sale, installation and servicing of automobile equipment and parts. Typical uses include muffler shops, automobile repair garages or automobile glass shops.

(2) Automotive Sales and Rentals. Automotive sales and rentals refers to on-site sales and/or rentals of automobiles, non-commercial trucks, motorcycles, motor homes and trailers together with incidental maintenance. Typical uses include automobile dealers, car rental agencies, or recreational vehicle sales and rental agencies.

(3) Cleaning. Cleaning refers to washing and polishing of automobiles. Typical uses include automobile laundries or car washes.

(4) Commercial Parking. Commercial parking refers to parking of operable motor vehicles on a temporary basis within a privately owned off-street parking area with or without a fee. Commercial parking is that which is not designated for any identified use. Typical uses include commercial parking lots or garages.

(5) Equipment Repair and Sales. Equipment repair and sales refers to repair of motor vehicles such as aircraft, boats, recreational vehicles, trucks, etc.; the sale, installation and servicing of automobile equipment and parts; and body repair, painting and steam cleaning. Typical uses include truck transmission shops, body shops, storage of manufactured homes, motor freight maintenance groups or agricultural equipment sales.

(6) Fabricated Housing Sales. Fabricated housing sales refers to the sales of new and used modular housing, manufactured homes and/or mobile homes; and ancillary minor repair of modular housing, manufactured homes and/or mobile homes sold from the same location as the new or used units. Typical uses include mobile homes sales lots and minor repairs of units sold on site that do not include changes in walls and do not include changes in undercarriage plumbing or support systems.

(7) Storage of Operable Vehicles. Storage of operable vehicles refers to storage of operable vehicles, recreational vehicles and boat trailers. Typical uses include storage areas within personal storage facilities and storage yards for commercial vehicles.

(8) Truck Stops. Truck stops refers to businesses engaged in the sale of fuel and lubricants primarily for trucks, routine repair and maintenance of trucks, and associated uses such as selling food and truck accessories.

(e) Building Maintenance Services. Building maintenance services use type refers to establishments primarily engaged in the provision of maintenance and custodial services to firms rather than individuals. Typical uses include janitorial, landscape maintenance or window cleaning services.

(f) Commercial Centers. Commercial centers use type refers to a group of unified commercial establishments built on a site which is planned, developed, owned and managed as an operating unit. The following are commercial center use types:

(1) Neighborhood Centers. Neighborhood centers refers to sales of convenience goods (foods, drugs and sundries) and personal services, those which meet the daily needs of an immediate neighborhood trade area. A neighborhood center typically includes convenience retail and services a population of 2,500 to 40,000 people, typically has a service area radius of one-half to one-and-one-half miles, and has a typical range of 15,000 to 50,000 square feet of gross leasable area.

(2) Community Centers. Community centers refers to shopping establishments containing some services of the neighborhood center plus other services providing a greater depth and range of merchandise than contained in the neighborhood center. A community center may be built around a department store or a variety store as the major tenant. A community center generally serves a trade area population of 40,000 to 50,000 people, typically has a service area radius of one to three miles, and has a typical range of 50,000 to 150,000 square feet of gross leasable area.

(3) Regional Centers. Regional centers refers to centers that provide shopping goods, general merchandise, apparel, furniture and home furnishings in full depth and variety. They usually are built around more than one department store. Typical design uses the pedestrian mall, either open or enclosed, as a connector between major anchor stores. A regional center serves as a major commercial center for the entire region and typically has more than 150,000 square feet of gross leasable area.

(g) Commercial Educational Services. Commercial educational services use type refers to educational services provided by private institutions or individuals with the primary purpose of preparing students for jobs in trade or profession. Typical uses include business and vocational schools, music schools and hair styling schools.

(h) Commercial Recreation. Commercial recreation use type refers to commercial establishments or places of business primarily engaged in the provision of sports, entertainment or recreation for participants or spectators. The following are commercial recreation use types:

(1) Commercial Campground Facilities/RV Park. Commercial campground facilities/RV park refers to areas and services for two (2) or more campsites, accommodating camping vehicles and tents, which are used by the general public as temporary living quarters for recreational purposes. Typical uses include recreational vehicle campgrounds.

(2) Destination Resorts. Destination resorts refers to commercial enterprises for recreation that can include lodging. Typical uses include ski resorts, dude ranches, and hunting and fishing lodges.

(3) Indoor Entertainment. Indoor entertainment refers to predominantly spectator uses conducted within an enclosed building. Typical uses include motion picture theaters, meeting halls and dance halls.

(4) Indoor Sports and Recreation. Indoor sports and recreation refers to predominantly participant sports conducted within an enclosed building. Typical uses include bowling alleys, billiard parlors, ice and roller skating rinks, indoor racquetball courts and athletic clubs.

(5) Limited Gaming Facilities. Limited gaming facilities refers to establishments which contains no more than fifteen (15) slot machines (and no other game or gaming device) where the operation of the slot machine is incidental to the primary business of the establishment.

(6) Marinas. Marinas refers to docking, storage, rental and minor repair of recreational and fishing boats. Typical uses include recreational boat marinas and boat rental establishments.

(7) Outdoor Entertainment. Outdoor entertainment refers to predominantly spectator-type uses conducted in open or partially enclosed or screened facilities. Typical uses include sports arenas, racing facilities and amusement parks.

(8) Outdoor Sports and Recreation. Outdoor sports and recreation refers to predominantly participant sports conducted in open or partially enclosed

or screened facilities. Typical uses include driving ranges, miniature golf courses, golf courses, swimming pools and tennis courts.

(9) Outdoor Sports Club. Outdoor sports club refers to sports clubs using agricultural land or open space for hunting, shooting or fishing purposes. Typical uses include duck clubs, hunting clubs, skeet clubs and rifle ranges.

(10) Unlimited Gaming Facilities. Unlimited gaming facilities refers to an establishment which contains fifteen (15) or more electronic gaming devices or operation of other gaming devices as authorized by the State of Nevada.

(i) Communication Facilities. Communication facilities use type refers to establishments primarily engaged in the transmission and/or receiving of electromagnetic waves. Typical uses include television stations, radio stations, satellite dishes, antennas and wireless communication facilities. Refer to Article 324, Communication Facilities, for subcategories of communication facilities.

(j) Construction Sales and Services. Construction sales and services use type refers to establishments or places of business primarily engaged in construction activities and incidental storage, as well as the retail or wholesale sale from the premises, of materials used in the construction of buildings or other structures. This use type does not include retail sales of paint, fixtures and hardware, or those uses classified as one of the automotive and equipment use types. This use type does not refer to actual construction sites. Typical uses include tool and equipment rental, or sales and building material stores.

(k) Continuum of Care Facilities, Seniors. Continuum of care facilities for seniors use type refers to establishments that provide range housing, activities and health services to allow for adults to age in place. Residential density and parking standards shall be determined in the special use permit process; all other development standards shall apply. Facilities may include independent living, assisted living, nursing care, and hospice care as well as accessory housing for staff, and medical facilities and services for residents.

(l) Convention and Meeting Facilities. Convention and meeting facilities use type refers to establishments which primarily provide convention and meeting facilities. Typical uses include convention facilities and wedding chapels.

(m) Data Center. Data Center use type refers to establishments or places of business primarily engaged in the storage/housing of equipment, such as computers, servers, switches, routers, data storage devices, and related equipment for the purpose of storing, managing, processing, and exchanging of digital data and information.

(n) Eating and Drinking Establishments. Eating and drinking establishments use type refers to establishments or places of business primarily engaged in the sale of prepared food and beverages for on-premises consumption, but excludes those uses classified under the liquor sales use type. The following are eating and drinking establishments use types:

(1) Convenience. Convenience refers to establishments or places of business primarily engaged in the preparation and retail sale of food and

beverages, have a short customer turnover rate (typically less than one hour), and may include sales of alcoholic beverages. Typical uses include drive-in and fast-food restaurants, ice cream parlors, sandwich shops and delicatessens.

(2) Full Service. Full service refers to establishments or places of business primarily engaged in the sale of prepared food and beverages on the premises, which generally have a customer turnover rate of one hour or longer, and which include sales of alcoholic beverages at the table or at a bar as an accessory or secondary service. Typical uses include full-service restaurants.

(o) Financial Services. Financial services use type refers to establishments primarily engaged in the provision of financial and banking services. Typical uses include banks, savings and loan institutions, loan and lending activities, and check cashing facilities.

(p) Funeral and Interment Services. Funeral and interment services use type refers to provision of services involving the care, preparation or disposition of human dead. The following are funeral and interment services use types:

(1) Cemeteries. Cemeteries refers to undertaking services and services involving the keeping of bodies provided on cemetery grounds. Typical uses include crematoriums, mausoleums and columbariums.

(2) Undertaking. Undertaking refers to services involving the preparation of the dead for burial and arranging and managing funerals. Typical uses include funeral homes or mortuaries.

(q) Gasoline Sales and Service Stations. Gasoline sales and service stations use type refers to retail sales of petroleum products from the premises of the establishment and incidental sale of tires, batteries, replacement items, lubricating services and minor repair services. Typical uses include automobile service stations.

(r) Helicopter Services. Helicopter services use type refers to areas used by helicopter or steep-gradient aircraft. The following are helicopter services use types:

(1) Heliport. Heliport refers to areas used by helicopters or by other steep-gradient aircraft, which includes passenger and cargo facilities, maintenance and overhaul, fueling service, storage space, tie-down space, hangers and other accessory buildings, and open space.

(2) Helistop. Helistop refers to areas on a roof or on the ground used by helicopters or steep-gradient aircraft for the purpose of picking up or discharging passengers or cargo, but not including fueling service, maintenance or overhaul.

(s) Liquor Manufacturing. Liquor manufacturing refers to the brewing, distillation, making, and/or manufacture of intoxicating liquors on the premises of the establishment. The resulting liquor products may be sold at retail to the public for on-site consumption and/or for off-site consumption. The liquor products may also be sold to licensed importer and/or wholesaler liquor dealers, with or without

sales to the public. Liquor manufacturing may be in conjunction with another commercial use type, such as a full service eating and drinking establishment. Typical uses include brew pubs, breweries, craft distilleries, and wine makers.

(t) Liquor Sales. Liquor sales use type refers to retail sales of alcoholic beverages, as defined in Chapter 30 of County Code (Intoxicating Liquor and Gaming Licenses and Regulations), to the public. The following are liquor sales use types:

(1) Off-Premises. Off-premises refers to the retail sale of alcoholic beverages to the public for off-site consumption, but excludes uses classified under the retail sales use type. Typical uses include stores that sell packaged liquor.

(2) On-Premises. On-premises refers to the retail sale of alcoholic beverages to the public for on-site consumption, but excludes uses classified under the eating and drinking establishments use type. Typical uses include bars, taverns, cabarets, and casino service bars.

(u) Lodging Services. Lodging services use type refers to establishments primarily engaged in the provision of lodging on a less-than-weekly basis within incidental food, drink, and other sales and services intended for the convenience of guests, but excludes those classified under residential group home and commercial recreation. The following are lodging services use types:

(1) Bed and Breakfast Inns. Bed and breakfast inns refers to single family dwellings with guest rooms (no cooking facilities in guest rooms) where, for compensation, meals and lodging are provided.

(2) Condominium Hotel. Condominium hotel refers to temporary residences for transient guests, primarily persons who have residence elsewhere, with access to each room through an interior hall and lobby or outside porch or landing, and when the hotel rooms are owned as separate real estate; and the remainder of the property including amenities, open space, etc. is either owned in common by the hotel room owners and managed by an association, or owned by a separate entity in which a fee for use of the amenities, open space, etc. may or may not be charged the hotel room owners.

(3) Hostels. Hostels refers to supervised transient facilities offering dormitory type lodging, usually with a minimum of facilities.

(4) Hotels and Motels. Hotels and motels refers to temporary residences for transient guests, primarily persons who have residence elsewhere, with access to each room through an interior hall and lobby or outside porch or landing.

(5) Vacation Time Shares. Vacation time shares refers to real properties that are subject to a time share program.

(v) Medical Marijuana Establishment. Medical marijuana establishment use type, as defined by NRS 453A, refers to commercial establishments, facilities, or places of business primarily engaged in the cultivation, production, acquisition, supply, sale or distribution of medical marijuana products and related supplies and services. All medical marijuana establishments must be registered and/or certified with the State Division of Public and Behavioral Health of the Department of Health and Human Services "Division." A

business may register with the Division to act as more than one of the medical marijuana establishment use types listed below in subsections one (1) through four (4). The following are medical marijuana establishment use types:

(1) Medical Marijuana Cultivation Facility. Medical marijuana cultivation facility, as defined by NRS 453A, refers to a business that acquires, possesses, cultivates, delivers, transfers, transports, supplies or sells marijuana and related supplies to medical marijuana dispensaries, facilities for the production of edible marijuana products or marijuana-infused products, or other cultivation facilities**.**

(2) Facility for the Production of Edible Marijuana Products or Marijuana-infused Products. Facility for the production of edible marijuana products or marijuana-infused products, as defined by NRS 453A, refers to a business that acquires, possesses, manufactures, delivers, transfers, transports, supplies or sells edible marijuana products or marijuana-infused products to medical marijuana dispensaries.

(3) Independent Testing Laboratory. Independent testing laboratory, as defined by NRS 453A, refers to private, and independent testing laboratories to test marijuana, edible marijuana products and marijuana-infused products that are to be sold in the State of Nevada.

(4) Medical Marijuana Dispensary. Medical marijuana dispensary, as defined by NRS 453A, refers to a business that acquires, possesses, delivers, transfers, transports, supplies, sells or dispenses marijuana or related supplies and educational materials to the holder of a valid registry identification card issued by the Division.

(w) Medical Services. Medical services use type refers to establishments primarily engaged in the provision of personal health services ranging from prevention, diagnosis and treatment, or rehabilitation services provided by physicians, dentists, nurses and other health personnel as well as the provision of medical testing and analysis services, but excludes those classified as any civic use type. Typical uses include medical offices, dental laboratories, health maintenance organizations, immediate care facilities or sports medicine facilities.

(x) Nursery Sales. Nursery sales use type refers to the sales of plants, flowers and related nursery items. The following are nursery sales use types:

(1) Retail. Retail refers to retail sale of plants and flowers and related nursery items. Typical uses include retail nurseries and home garden stores.

(2) Wholesale. Wholesale refers to wholesaling of plants and flowers, with incidental retail sales. Typical uses include wholesale nurseries.

(y) Personal Services. Personal services use type refers to establishments primarily engaged in the provision of informational, instructional, personal improvement and similar services of a non-professional nature, but excludes services classified as commercial recreation or lodging services. Typical uses include photography studios, driving schools or weight loss centers.

(z) Personal Storage. Personal storage use type refers to storage services primarily for personal effects and household goods within an enclosed storage area having

individual access, but excludes workshops, hobby shops, manufacturing or commercial activity. Typical uses include mini-warehouses.

(aa) Professional Services. Professional services use type refers to establishments which provide professional services to individuals or businesses, but excludes offices servicing walk-in customers which are classified under the administrative offices use type. Typical uses include law offices, real estate offices, insurance offices and architectural firms.

(bb) Recycle Center. Recycle center use type refers to facilities for the collection, as a commercial enterprise, of household recyclables such as newspapers, bottles and cans. Recycle centers do not include recycle facilities existing as a part of a refuse pickup service or recycle bins used for donations to non-profit organizations. The following are recycle center use types:

(1) Full Service Recycle Center. Full service recycle center refers to large, fully attended recycle centers accepting paper, plastic and glass household recyclables and may include processing or sorting of the recyclables.

(2) Remote Collection Facility. Remote collection facility refers to a center for the acceptance, by redemption or purchase, of recyclable materials from the public. Such a facility does not process the recyclables on site. Typical uses include reverse vending machines.

(3) Residential Hazardous Substance Recycle Center. Residential hazardous substance recycle center refers to specialized recycling centers that receive household hazardous substances such as household paint, household cleaners and automobile engine oil.

(cc) Repair Services, Consumer. Repair services, consumer use type refers to establishments primarily engaged in the provision of repair services to individuals and households rather than firms, but excludes automotive repair. Typical uses include appliance repair shops, apparel repair firms or instrument repair firms.

(dd) Retail Sales. Retail sales use type refers to retail sales of commonly used goods and merchandise, either free-standing or within a commercial center, but excludes those uses classified under other use types. The following are retail sales use types:

(1) Convenience. Convenience refers to establishments which provide a limited number of frequently or recurrently needed personal items or services for residents of an immediate neighborhood. Typical uses include convenience stores, small grocery stores, barber shops, beauty parlors, dry cleaners and self-service laundromats.

(2) Specialty Stores. Specialty stores refers to establishments which provide a variety of retail or personal services needs for residents in the larger community area. Typical uses include supermarkets, super drugs stores, clothing boutiques, antiques, bookstores, furniture stores and auto parts.

(3) Comparison Shopping Centers. Comparison shopping centers refers to retail establishments that provide a wide variety of retail and personal

services that cater to the regional needs. Typical uses include full-line department stores and warehouse-styled retail outlets.

(ee) Secondhand Sales. Secondhand sales use type refers to establishments primarily engaged in the sale of goods and merchandise which are not being sold for the first time, but excludes those classified as animal sales and services and automotive and equipment. Typical uses include secondhand stores and thrift shops.

(ff) Transportation Services. Transportation services use type refers to establishments which provide private transportation of persons and goods. Typical uses include taxi services and commercial postal services.

[Amended by Ord. 875, provisions eff. 8/3/93; Ord. 906, provisions eff. 7/27/94; Ord. 1004, provisions eff. 1/30/98; Ord. 1023, provisions eff. 7/1/98; Ord. 1097, provisions eff. 7/28/00; Ord. 1179, provisions eff. 12/6/02; Ord. 1238, provisions eff. 6/4/04; Ord.1288, provisions eff. 3/24/06; Ord. 1347, provisions eff. 11/2/07; Ord. 1433, provisions eff. 3/5/10; Ord. 1481, provisions eff. 2/3/12; Ord. 1497, provisions eff. 10/5/12; Ord. 1527, provisions eff. 4/18/14; Ord. 1712, provisions eff. 6/27/14.]

Section 110.304.30 Industrial Use Types. Industrial use types include the on-site production of goods by methods not agricultural in nature, including certain accessory uses.

(a) Aggregate Facilities. Aggregate facilities use type refers to the extraction and processing of sand, gravel and rock from the ground. Typical uses include sand and gravel pit and ancillary uses such as concrete and asphalt batch plants.

(b) Caretaker's Residence. Caretaker's residence refers to a permanent on-site residential unit for an industrial use. The purpose of this unit is to provide security for the industrial use and the site on which it is located. It shall be occupied only while a valid business license for an industrial use is in effect and only by an employee of the company which operates the industrial use and at no time shall it be rented to any party other than someone directly employed by the industrial use operator. The caretaker's residence and industrial use are permitted to share access to the site. A caretaker's residence should provide a permanent kitchen, toilet facilities, sleeping, eating, and living facilities, all separate from the industrial use, and must be permitted by all applicable state and local agencies. Two (2) standard parking spaces shall be reserved for use by the residents of the caretaker's residence. The floor area of the unit shall not exceed two thousand (2,000) square feet. A minimum lot size of one (1) acre is required. Any solid fuel burning device is prohibited. Upon cessation of the industrial use, the use of the caretaker's residence must cease. The following are caretaker's residence use types:

(1) Attached. Caretaker's residence attached must be attached to or located within the main structure for the industrial use. Only one (1) caretaker's residence is permitted per structure, regardless of the number of businesses located in that structure. Only one (1) caretaker's residence is permitted per employer and per parcel, regardless of the number of businesses located on that parcel.

(2) Detached. Caretaker's residence detached must be sited within the developed industrial area, and must be visually integrated with the industrial use. Only one (1) caretaker's residence is permitted per

employer and per parcel, regardless of the number of businesses located on that parcel.

(c) Custom Manufacturing. Custom manufacturing use type refers to the on-site production of goods by hand manufacturing or artistic endeavor which involves only the use of hand tools or domestic mechanical equipment and the incidental sale of these goods directly to consumers. Typical uses include ceramic studios, custom cabinet making, candle making shops and custom jewelry manufacturers.

(d) Energy Production. Energy production use type refers to the commercial production of electricity.

(1) Non-Renewable Energy Production. Non-Renewable energy production use type refers to the commercial production of energy utilizing any non-renewable source of energy.

(2) Renewable Energy Production. Renewable energy production use type refers to the commercial production of energy utilizing solar, geothermal, wind, hydroelectric, and biomass sources of energy.

(e) General Industrial. General industrial use type refers to the on-site production of goods other than those that are agricultural or extractive in nature, but excludes those uses classified under custom manufacturing and high technology use types. The following are general industrial use types:

(1) Limited. Limited refers to production processes which use already manufactured components to assemble, print or package a product such as cloth, paper, plastic, leather, wood, glass or stones, but not including such operations as paper, saw or planing mills, steel, iron or other metalworks, rolling mills, or any manufacturing uses involving primary production of commodities from raw materials. By the nature of the activity performed and/or the scale of operation, these uses can be located near residential or commercial uses with minimal impact to adjacent uses. Typical uses include apparel manufacturing, paper products finishing, furniture production and production of fabricated metal products.

(2) Intermediate. Intermediate refers to production processes which can be located near residential or commercial uses only if special control measures are taken to mitigate the land use conflicts which can result from such operations. Typical uses include production of food substances, household appliance manufacturing, prefabrication of manufactured buildings, and major repair/reconstruction and storage of fabricated housing.

(3) Heavy. Heavy refers to production processes which should not be located near residential or commercial uses due to the intensive nature of the industrial activity and/or the scale of operation. These uses may be located near other manufacturing uses exhibiting similar characteristics although special control measures may be required for some extremely intensive operations to ensure compatibility with similar industrial uses. Typical uses include motor vehicle assembly, sawmills, textile dyeing, leather tanning, hazardous chemical production,

petroleum refining, primary metal processing, storage of manufactured homes and production of explosives or propellants.

(f) High Technology Industry. High technology industry use type refers to the research, development and controlled production of high-technology electronic, industrial or scientific products. Typical uses include biotechnology firms and computer component manufacturers.

(g) Inoperable Vehicle Storage. Inoperable vehicle storage use type refers to premises devoted to the parking and/or storage of inoperable vehicles. Typical uses include buildings, storage yards, and auto wrecking facilities devoted to the parking and/or storage of inoperable vehicles.

(h) Laundry Services. Laundry services use type refers to establishments primarily engaged in the provision of large scale laundering, dry cleaning or dying services other than those classified as personal services. Typical uses include laundry agencies, diaper services or linen supply services.

(i) Mining Operations. Mining operations use type refers to the extraction and processing of rocks and minerals from the ground, but excludes uses classified under the petroleum gas extraction use type. Typical uses include the mining of precious metals and industrial minerals.

(j) Petroleum Gas Extraction. Petroleum gas extraction use type refers to the extraction of oil and natural gas from the ground and the temporary storage of oil at the well site. Typical uses include oil and gas wells.

(k) Salvage Yards. Salvage yards use type refers to the collection, storage or sale of rags, scrap metal or discarded material; or the collection, dismantling, storage, salvaging or demolition of vehicles, machinery or other materials. Typical uses include junkyards and auto wrecking facilities.

(l) Wholesaling, Storage and Distribution. Wholesaling, storage and distribution use type refers to establishments or places of business primarily engaged in wholesaling, storage and bulk sale distribution including, but not limited to, open-air handling of material and equipment other than live animals and plants. The following are wholesaling, storage and distribution use types:

(1) Light. Light refers to wholesaling, storage and warehousing services within enclosed structures. Typical uses include wholesale distributors, storage warehouses, or moving and storage firms.

(2) Heavy. Heavy refers to distribution and handling of materials and equipment. Typical uses include monument sales, stone yards or open storage yards.

[Amended by Ord. 906, provisions eff. 7/27/94; Ord. 1039, provisions eff. 11/1/98; Ord. 1433, provisions eff. 3/5/10; Ord. 1443, provisions eff. 7/26/10; Ord. 1494, provisions eff. 8/9/12; Ord. 1504, provisions eff. 3/8/13.]

Section 110.304.35 Agricultural Use Types. Agricultural use types include the on-site production of plant and animal products by agricultural methods.

(a) Agricultural Processing. Agricultural processing use type refers to the processing of foods and beverages from agricultural commodities, but excludes animal slaughtering. Typical uses include canning of fruits and vegetables, processing of dairy products, and the production of prepared meats from purchased carcasses.

(b) Agricultural Sales. Agricultural sales use type refers to the sale of agricultural supplies such as feed, grain and fertilizers. Typical uses include feed and grain stores.

(c) Animal Production. Animal production use type refers to raising of animals or production of animal products, such as eggs or dairy products, on an agricultural or commercial basis, but excluding commercial slaughtering. Typical uses include grazing, ranching, dairy farming, poultry farming and aquaculture.

(d) Animal Slaughtering, Agricultural. Agricultural animal slaughtering use type refers to the slaughtering of animals to be used in making meat products on the same premises.

(e) Animal Slaughtering, Commercial. Commercial animal slaughtering use type refers to the slaughtering of animals to be sold to others or to be used in making meat products on the same premises. Typical uses include slaughter houses.

(f) Animal Slaughtering, Mobile. Mobile animal slaughtering use type refers to the slaughtering of animals to be sold to others or to be used in making meat products, within a fully-enclosed mobile slaughtering facility approved by the US Food and Drug Administration, for a duration of not more than fourteen (14) days off-site on any one parcel within a calendar year. Typical uses include mobile commercial slaughtering units.

(g) Crop Production. Crop production use type refers to raising and harvesting of tree crops, row crops or field crops on an agricultural or commercial basis, including packing and processing.

(h) Forest Products. Forest products use type refers to commercial timber harvesting uses and facilities. Typical uses include production of forest products, sawmills and lumber camps.

(i) Game Farms. Game farms use type refers to boarding or breeding of exotic animals generally considered as wild or not normally domesticated.

(j) Produce Sales. Produce sales use type refers to the on-site sale of farm produce and/or shell eggs from property owned, rented or leased by the farmers who grow or produce all or part of the farm produce or shell eggs offered for sale. Typical uses include produce stands, and fruit and vegetable stands.

(1) Only products grown or produced on-site may be sold. A minimum lot size of forty (40) acres is required to establish produce sales as an allowed use in the General Rural (GR) regulatory zone. A valid business license pursuant to Chapter 25 of County Code must be obtained prior to any sales.

(2) Temporary produce sales, for a maximum duration of thirty (30) days in any one (1) calendar year, are allowed in all regulatory zones; however,

a valid business license pursuant to Chapter 25 of County Code must be obtained prior to any sales.

[Amended by Ord. 1023, provisions eff. 7/1/98; Ord. 1433, provisions eff. 3/5/10; Ord. 1540, provisions effective 9/5/14.]

Article 306
ACCESSORY USES AND STRUCTURES

Sections:

110.306.00	**Purpose**
110.306.05	**Applicability**
110.306.10	**Detached Accessory Structures**
110.306.15	**Main Structures Required**
110.306.20	**Attached Accessory Dwellings**
110.306.25	**Detached Accessory Dwellings**
110.306.30	**Hallways, Breezeways, and other Similar Connections**
110.306.35	**Outdoor Storage/Outdoor Display**
110.306.45	**Personal Landing Fields**
110.306.50	**Non-municipal Air Strips and Glider Ports**
110.306.53	**Cottage Foods**
110.306.55	**Nonconformance**

Section 110.306.00 Purpose. The purpose of this article, Article 306, Accessory Uses and Structures, is to allow accessory uses and structures and provide standards and conditions for regulating them.

Section 110.306.05 Applicability. Accessory uses and structures that are incidental and subordinate to existing principal uses and established main structures are allowed in all regulatory zones except as otherwise provided herein. This is not to be construed as permitting any commercial uses, including the outdoor storage of commercial vehicles, in residential regulatory zones unless specifically allowed by this Development Code or other applicable chapters of the Washoe County Code.

[Amended by Ord. 1451, provisions eff. 1/1/11.]

Section 110.306.10 Detached Accessory Structures. Detached accessory structures are defined in Article 304, Use Classification System, under Section 110.304.15, Residential Use Types. The following development requirements shall apply to detached accessory structures:

(a) Lot Coverage. The establishment of detached accessory structures shall not exceed the following lot coverage limitations:

(1) On lots in the High Density Suburban (HDS) and Medium Density Suburban (MDS) Regulatory Zones, the combined area (i.e. square footage) of all building footprints on the lot shall not exceed fifty (50) percent of the total lot acreage;

(2) On lots in the Low Density Suburban (LDS) Regulatory Zones, the combined area (i.e. square footage) of all building footprints on the lot shall not exceed twenty-five (25) percent of the total lot acreage;

(3) On lots in the High Density Rural (HDR) Regulatory Zone, the combined area (i.e. square footage) of all building footprints on the lot shall not exceed twenty (20) percent of the total lot acreage;

(4) On lots in the Medium Density Rural (MDR) Regulatory Zone, the combined area (i.e. square footage) of all building footprints on the lot shall not exceed fifteen (15) percent of the total lot acreage;

(5) On lots in the Low Density Rural (LDR) Regulatory Zone, the combined area (i.e. square footage) of all building footprints on the lot shall not exceed ten (10) percent of the total lot acreage or eighty-thousand (80,000) square feet, whichever is less;

(6) Exemptions to lot coverage limitations. Parcels forty (40) acres in size or larger in the General Rural (GR) and General Rural Agricultural (GRA) Regulatory Zones, and all parcels in the Commercial, Industrial, and Urban Regulatory Zones, are exempt from the lot coverage limitations of this section.

(b) Setbacks.

(1) Accessory structures twelve (12) feet in height or less may be located within the required rear and side yard setbacks provided they are five (5) feet or more from the rear and side property line. Accessory structures are prohibited within the required front yard setback.

(2) Accessory structures more than twelve (12) feet in height shall comply with the yard setbacks for the main dwelling units stipulated in Article 406, Building Placement Standards. The height of a structure is determined by using the building code currently adopted by Washoe County.

(c) Height Limits. The height of an accessory structure shall not exceed twelve (12) feet when the structure is erected within the required yard setbacks. The height of an accessory structure shall not exceed thirty-five (35) feet when the structure is erected outside the required yard setbacks.

(d) Size. A proposal to establish a detached accessory structure that is larger (i.e. has more square footage or a larger building footprint) than the existing main structure shall require the approval of an Administrative Permit (pursuant to Article 808), to include review of building height and architectural compatibility with surrounding dwellings, prior to the issuance of a building permit. Parcels forty (40) acres in size or larger in the General Rural (GR) and General Rural Agricultural (GRA) Regulatory Zones, and all parcels in the Commercial and Industrial Regulatory Zones, are exempt from this requirement.

(e) Location/Slopes. A detached accessory structure used as a private garage on any interior lot where the slope of the front half of the lot is greater than a two (2) foot rise (or fall) for every ten (10) feet above (or below) the established street grade may be built to the property line, provided such structure shall not exceed fifteen (15) feet in interior height when measured from parking surface and providing the Engineering Division has been able to determine that:

(1) County snow removal operations will not be impeded or sufficient measures have been incorporated in the structure's design to mitigate an impediment to County snow removal operations and/or the County has been held harmless from liability resulting from the County's snow removal operations;

(2) The speed of traffic and the volume of traffic on the street is such that the placing of the garage at the property line will not cause a safety problem for vehicles using the street; and

(3) The placement of the garage at the property line will not impede the ability of the County to widen the street in accordance with the adopted Capital Improvements Program, or in accordance with a possible widening of the street as shown in the adopted Master Plan.

(f) Building Setback. A detached accessory structure shall not be located closer than ten (10) feet to any main building on an adjoining parcel.

(g) Cargo Containers, to include Sea-land Containers, Cargo Containers or Other Portable Storage Containers not Designed for Independent or "In-tow Trailer" Highway Use. Cargo containers designed and constructed as a standardized, reusable vessel to be loaded on a truck, rail car or ship may be established as a detached accessory structure for the sole purpose of storage with the following restrictions:

(1) Must meet all Washoe County placement standards for a detached accessory structure;

(2) Only one (1) cargo container shall be allowed on a parcel of land having less than five (5) acres in size, and shall not exceed a maximum size of ten (10) feet wide by nine (9) feet high by forty (40) feet in length;

(3) In the Suburban and Urban Regulatory Zones, the cargo container shall be:

(i) Located within an area fenced by either a six (6) foot high slatted chain link fence, wooden fence or other durable and opaque fencing, or

(ii) Located within an area screened by existing solid vegetation having a minimum height of six (6) feet. If existing landscaping is used as screening, it shall be indicated on the building plans and photos shall be submitted as evidence; or

(iii) Painted one, solid, muted color that blends with the surrounding vegetation, or structures or topography.

(4) All cargo containers shall be free from damage, shall not be structurally altered, shall be free from severe rust, and shall not have exposed bare metal;

(5) Shall not include plumbing fixtures;

(6) Shall not be stacked; except in the Commercial and Industrial land use designations, and then not stacked above two (2) high. Setback requirements shall be determined by the total height of the stacked structure;

(7) Shall not display off-premise advertising, company logos, names, or other markings painted on, or otherwise attached to, the exterior of the cargo container;

(8) Shall not occupy any required off-street parking spaces for the site;

(9) Shall not be placed between a residence and the adjoining street or road right-of-way that provides primary access to the residence;

(i) On a parcel fronted by two (2) or more street or road right-of-ways, the Director of Community Development shall have the authority to determine the primary access to the residence.

(10) When placed on a parcel fronted by two (2) or more street or road right-of-ways, shall be placed at least one hundred (100) feet from all street or road right-of-ways, excepts as provided for in (9), above.

(i) The Director of Community Development shall have the authority to allow a minor deviation in setbacks of up to twenty-five (25) feet to the standards in (10) above, when the Director is presented with sufficient evidence that the proposed cargo container will be aesthetically enhanced to blend with the surrounding residences.

(ii) Aesthetic enhancements, as required in (i) above shall consist of one (1) or more of the following: siding and/or painting to match the residence on the parcel; landscaping to obscure the cargo container from view from off-site; placement of the cargo container to obscure view from off-site; other techniques as proposed by the applicant and acceptable to the Director.

(iii) Approval of a minor deviation to setback standards in (10) above shall be by means of application for a Director's Modification of Standards.

(11) Shall be separated from any other structure, storage shed or other cargo containers by a minimum of ten (10) feet, when located within one hundred (100) feet of any property line;

(12) A cargo container may be allowed in a Commercial or Industrial land use regulatory zone for storage purposes if there is a lawful, principal established use on the property where it is located, is located to the rear of any principal use, is not located adjacent to a street, does not impact required parking, and is located behind a slatted chain link fence, wooden fence or other acceptable fencing having a minimum height of eight (8) feet, or existing solid vegetation having a minimum height of eight (8) feet;

(13) Shall obtain an appropriate permit from the Department of Building and Safety if the unit is over one-hundred twenty (120) square feet; and

(14) The Department of Building and Safety may additionally require foundations, tie-downs or other safety apparatus to assure compliance with wind load and other safety standards. Any electrical wiring shall require a building permit from the Department of Building and Safety.

(15) Shall not be established as an Agricultural Building as a Main Use pursuant to Article 330, Domestic Pets and Livestock, of this Development Code.

(h) Deed Restriction Required for Connection to Water or Wastewater Facilities. Any detached accessory structure proposed to be connected to a potable water supply line or a septic system or community sewer system (i.e. sanitary sewer) as part of a building permit application shall require a deed restriction to be filed with the County Recorder's office stipulating that the structure will not be converted to an accessory dwelling unit as defined in Section 110.304.15. Said deed restriction shall make the County a party to the restriction and shall be obtained through the Department of Community Development. A copy of the recorded deed restriction shall be required prior to the issuance of the building permit. The Department of Community Development shall agree in writing to the removal of the deed restriction if the owner legally converts the accessory structure to an accessory dwelling unit (pursuant to the provisions of this article and applicable building codes) or if the structure has been permanently disconnected from the potable water supply and sanitary sewer system. Installation of both a kitchen (as defined in Article 902) and a toilet in a detached accessory structure shall render the structure as a dwelling unit subject to the provisions of this article.

(i) Use of Mobile/Manufactured Homes as Detached Accessory Structures. A detached accessory structure shall not be comprised of a mobile or manufactured home due to Federal Housing and Urban Development (HUD) standards prohibiting the removal or modification of any interior structural components, such as plumbing fixtures (see HUD 24 CFR Part 3280).

[Section 110.306.10 renamed from "Accessory Structures" and amended by Ord. 875, provisions eff. 8/3/93. Amended by Ord. 889, provisions eff. 11/29/93; Ord. 899, provisions eff. 5/31/94; Ord. 926, provisions eff. retro to 5/31/94; Ord. 939, provisions eff. 11/1/95; Ord. 1218, provisions eff. 10/24/03; Ord.1288, provisions eff. 3/24/06; Ord. 1352, provisions eff. 11/23/07; Ord. 1412, provisions eff. 7/3/09; Ord. 1447, provisions eff. 9/9/10; Ord. 1451, provisions eff. 1/1/11; Ord. 1475, provisions eff. 1/12/12; Ord. 1480, provisions eff. 2/3/12, Ord. 1531, provisions eff. 6/27/14.]

Section 110.306.15 Main Structures Required. Except as otherwise provided in Section 110.330.55, Agricultural Buildings, it is unlawful to construct, erect or locate private garages or other accessory structures and uses in any Rural, Suburban or Urban Residential Regulatory Zone, including the General Rural Agricultural (GRA) Regulatory Zone, without an existing main structure and/or existing principal use as provided for under Article 302, Allowed Uses.

[Amended by Ord. 926, provisions eff. retro to 5/31/94; Ord. 1451, provisions eff. 1/1/11; Ord. 1475, provisions eff. 1/12/12.]

Section 110.306.20 Attached Accessory Dwellings. Attached accessory dwellings are defined in Article 304, Use Classification System, under Section 110.304.15, Residential Use

Types. Attached accessory dwellings are permitted in the General Rural (GR), General Rural Agricultural (GRA), and the Residential Regulatory Zones, pursuant to all of the following regulations:

(a) A main residential unit exists and no other accessory dwelling unit has been established.

(b) A minimum lot area of five-thousand (5,000) square feet exists.

(c) Compliance with the setback and height standards of the regulatory zone and the lot coverage standards enumerated in Section 110.306.10(a).

(d) The attached accessory dwelling unit shall not exceed forty (40) percent of the total square footage of the main dwelling unit or one thousand (1,000) square feet, whichever is smaller. The square footage of garages, crawl spaces, cellars, attics, or basements not designed for human occupancy shall not be included when calculating the total square footage of the main dwelling unit, unless such areas have been legally converted into habitable space.

(e) An attached accessory dwelling may be created by converting part of, or adding on to, an existing single family main dwelling unit. To be considered attached, the accessory dwelling unit must abut (i.e. be on the opposite side of a wall or ceiling) the habitable space of the main dwelling, or the ceiling of a garage attached to the main dwelling. Incidental and accessory features such as trellises, decks, patios, breezeways, or tool sheds will not be considered as establishing an attached structure/dwelling. Any exterior entrance to the attached accessory dwelling shall not be located along the same wall as the main entrance to the main unit.

(f) A minimum of one (1) off-street parking space shall be added, in addition to the applicable parking requirements of the main unit. Additional parking beyond the one (1) off-street parking space added may be required pursuant to the provisions of Article 410, Parking and Loading.

(g) Only one (1) accessory dwelling unit is allowed per parcel.

[Amended by Ord. 875, provisions eff. 8/3/93; Ord. 926, provisions eff. retro to 5/31/94; Ord. 939, provisions eff. 11/1/95; Ord. 1451, provisions eff. 1/1/11; Ord. 1475, provisions eff. 1/12/12.]

Section 110.306.25 Detached Accessory Dwellings. Detached accessory dwellings are defined in Article 304, Use Classification System, under Section 110.304.15, Residential Use Types. Detached accessory dwellings are allowed in the General Rural (GR) and General Rural Agricultural (GRA) Regulatory Zones, and are permitted in the Low Density Rural (LDR), Medium Density Rural (MDR), High Density Rural (HDR), and Low Density Suburban (LDS) Regulatory Zones pursuant to the administrative review process and requirements of this section. A detached accessory dwelling is permitted in the Medium Density Suburban (MDS) Regulatory Zone subject to a special use permit reviewed by the Board of Adjustment. Any detached accessory dwelling unit must adhere to the following requirements:

(a) A main residential unit exists and no other accessory dwelling unit has been established.

(b) A minimum lot area of twelve thousand (12,000) square feet exists.

(c) Compliance with the setback and height standards of the regulatory zone and the lot coverage standards enumerated in Section 110.306.10(a).

(d) Except for in the Medium Density Suburban (MDS) Regulatory Zone, the detached accessory dwelling unit shall not exceed fifteen hundred (1,500) square feet, or fifty (50) percent of the total square footage of the main dwelling unit, whichever is smaller. In the Medium Density Suburban (MDS) Regulatory Zone, the detached accessory dwelling unit shall not exceed eight hundred (800) square feet or fifty (50) percent of the total square footage of the main dwelling unit, whichever is smaller. The square footage of garages, crawl spaces, cellars, attics, or basements not designed for human occupancy shall not be included when calculating the total square footage of the main dwelling unit, unless such areas have been legally converted into habitable space. The maximum permitted square footage of a detached accessory dwelling unit shall not be increased by use of the variance process contained in Article 804, Variances, except for conversion of a guest house, that was legally constructed prior to May 26, 1993, to a detached accessory dwelling unit.

(e) A manufactured or modular home constructed within six (6) years of the date of its placement is permitted as a detached accessory dwelling unit, subject to the size and regulatory zone requirements in (d) above and the provisions of Article 312, Fabricated Housing, provided that the unit is permanently affixed to the property, its foundation system is masked and the unit is converted to real property pursuant to the provisions of Article 312, Fabricated Housing, at the time of the final inspection date. Fabricated homes are permitted as detached accessory dwelling units in a manufactured home subdivision.

(f) A minimum of one (1) off-street parking space shall be added, in addition to the applicable parking requirements of the main unit. Additional parking beyond the one (1) off-street parking space added may be required pursuant to the provisions of Article 410, Parking and Loading.

(g) Only one (1) accessory dwelling unit is allowed per parcel.

(h) A detached accessory dwelling unit may be converted to a main dwelling unit by subdividing the original parcel. The newly subdivided parcels (and any structures thereon) must meet all provisions of the Development Code, including the setback, height, and minimum lot area standards of the applicable regulatory zone.

(i) Administrative Review Process. Proposals to establish a detached accessory dwelling unit in the Low Density Rural (LDR), Medium Density Rural (MDR), High Density Rural (HDR), and Low Density Suburban (LDS) Regulatory Zones shall be reviewed pursuant to the following process and requirements:

(1) Review. The Director, or his designee, shall review a development application request for a detached accessory dwelling unit for compliance with the Development Code while also taking into consideration any testimony offered by affected property owners and the applicant. The Director, or his designee, may approve, approve with conditions, modify, modify with conditions, or deny the request. All administrative decisions shall be in writing. The administrative decision may be appealed to the Board of Adjustment per the procedures set forth below.

(2) Affected Property Owners. Upon receipt of a complete application to establish a detached accessory dwelling unit, the Director, or his designee, shall determine the owners of real property that may be affected by the proposed use. All property owners within five hundred (500) feet of the subject parcel, Citizen Advisory Board members, homeowners associations, or architectural control committees that are registered with the Building and Safety Division of the County; and all military installations as defined in Article 902, Definitions, that are within three thousand (3,000) feet of the property that is the subject of the proposed use will be considered affected property owners. A minimum of ten (10) adjacent property owners shall be noticed.

(3) Processing. Upon receipt of a complete application to establish a detached accessory dwelling unit, the Director, or his designee, shall commence processing and reviewing the request. Affected property owners may provide written testimony on the application for consideration in the review process and inclusion into the public record. The applicant shall be given an opportunity to respond to any testimony provided. All testimony provided shall be considered by the Director, or his designee, in rendering a decision.

(i) Notice. Notice will be mailed to affected property owners within three (3) working days of receipt of a complete application. An application must be deemed complete or incomplete within three (3) working days of receipt of the application.

(ii) Affected Property Owner Comment Period. Written testimony from affected property owners must be received by the department within fifteen (15) calendar days of notices being mailed. If the end of the affected property owner period falls on a non-business day, then comments shall be due the next business day.

(iii) Applicant Responses to Affected Property Owner Comments. Written responses from the applicant must be received by the department within seven (7) calendar days of the end of the affected property owner comment period. If the end of the applicant response period falls on a non-business day, then responses shall be due the next business day.

(iv) Issuance of Written Decision on the Application. A written decision shall be issued and mailed by the Director, or his designee, within ten (10) working days of the department receiving the applicant responses. The applicant may choose not to respond and begin this ten (10) working day period immediately following the affected property owner comment period. The written decision shall be mailed to all individuals with addresses listed on the application, the property owner of record, and all affected property owners (as defined in subsection (2) above).

(v) Public Hearing Not Required. No public hearing is required for the completion of this process, unless the administrative decision

is appealed to the Board of Adjustment in accordance with the procedures set forth in this article.

(4) Effective Date of Action. Action on the application request, unless otherwise specified, shall be effective upon expiration of the appeal period.

(5) Contents of Notice – Approval or Denial. Such notice shall describe the proposed application request; describe the lot, parcel, properties, or area that are the subject of the application request; describe the decision of the Director, or his designee; and, if the application has been approved, any conditions made part of the approval; the appeal and/or appellate procedures that can be taken regarding the decision; and the closing date of filing an appeal of the decision.

(6) Compliance with Noticing Requirements. All owners of real property to be noticed pursuant to this section shall be those owners identified on the latest ownership maps and records of the Washoe County Assessor. Compliance with the noticing requirements is established when notice is mailed to the last known address listed on the records of the Assessor, or if requested by a party to whom notice must be provided, by electronic means if receipt of such an electronic notice can be verified.

(7) Appeals. An administrative decision of the Director, or his designee, made pursuant to this article may be appealed in accordance with the following provisions:

(i) An appeal of the administrative decision shall be made within ten (10) calendar days from the date of the notice of decision was mailed. If filed, an appeal stays any further action on the decision until final resolution of the appeal. If the end of the appeal period falls on a non-business day, the appeal period shall be extended to include the next business day.

(ii) Appeals may be filed only by the applicant or the applicant's authorized agent or by an affected property owner (as defined in subsection (2) above).

(iii) An Appeal of Decision application shall be filed with the Department of Community Development, accompanied by a filing fee. The appeal shall be in writing and state the basis of the appeal by citing the inadequacy of the decision, reasons for denial, and/or conditions of approval made in the decision.

(iv) Appeals shall be heard by the Board of Adjustment. The Department of Community Development shall schedule a public hearing on the appeal for the next available meeting date of the Board of Adjustment.

(v) The public hearing on the appeal shall be noticed pursuant to Section 110.808.40. The notice shall state that an appeal has been filed; describe the request being appealed; describe the lot, parcel, property or areas that are the subject of the application;

describe the final decision on the request; and note other pertinent information.

(vi) The Board of Adjustment shall consider only those items cited in the appeal. In its deliberation, it may use the record and any additional evidence relative to the application and may confirm, reverse, or modify the appealed action based upon its interpretation of the standards required and the evidence submitted. The action of the Board of Adjustment may be appealed to the Washoe County Commission for a final determination.

(8) Modification of the terms and/or conditions of an administrative approval shall not be allowed. Proposals to modify the terms and/or conditions of an administrative decision shall require a new application following the same procedure required for the initial application.

(9) A certificate of occupancy for the detached accessory dwelling unit shall be obtained by the time specified in the administrative decision, or if not specified, within two (2) years from the final date of administrative approval. Failure to obtain a certificate of occupancy within the specified timeframe shall render the approval null and void. The time specified in the administrative decision may be extended in writing by the Director, or his designee, for a period of no more than two (2) years. Requests for time extensions shall be in writing and shall be submitted at least two (2) weeks prior to the expiration date. The request shall state the reason for the extension. No more than one (1) extension of time shall be granted.

(10) The Board of Adjustment may initiate an action to revoke an administrative approval issued pursuant to this section. The Board of Adjustment shall hold a public hearing upon the revocation of the administrative approval and provide notice as set forth in Section 110.808.40. After the public hearing, and upon considering the evidence submitted, the Board of Adjustment may take action to revoke the administrative approval based upon a finding of any one (1) or more of the following grounds:

(i) That the administrative approval was fraudulently obtained or extended;

(ii) That one (1) or more of the conditions upon which such development approval was granted have been violated; or

(iii) That the use or facility for which the development approval was granted is so conducted or maintained as to be detrimental to the public health or safety, or as to be a public nuisance.

(j) Conditions of approval for a detached accessory dwelling unit shall include the requirement of the installation of a water meter if the detached accessory dwelling unit proposes to use a domestic well as its source of water.

[Amended by Ord. 875, provisions eff. 8/3/93; Ord. 926, provisions eff. retro to 5/31/94; Ord. 939, provisions eff. 11/1/95; Ord. 1089, provisions eff. retro to 1/1/00; Ord. 1331, provisions eff. 6/22/07; Ord. 1347, provisions eff. 11/2/07; Ord. 1451, provisions eff. 1/1/11; Ord. 1475, provisions eff. 1/12/12.]

Section 110.306.30 Hallways, Breezeways, and other Similar Connections.

(a) Hallways. For the purposes of this article, a hallway is defined as a completely enclosed corridor, passageway, or other similar enclosed space that connects two (2) separate rooms, or ingress and egress points, and which is not intended nor designed as habitable space. A hallway shall not be used to connect two (2) separate dwelling units.

(b) Breezeways. For the purposes of this article, a breezeway is defined as a covered walkway, passageway, or corridor that has at least one (1) side entirely or partially open (except for necessary supporting columns), is not intended nor designed as habitable space, and which may or may not be connected to a structure.

(1) A breezeway, as defined above, shall not exceed a length or width of fifteen (15) feet.

(2) A covered breezeway with at least one (1) solid wall shall be calculated as a structure (i.e. footprint) when determining lot coverage on a given lot.

[Section 110.306.30, Hallways, Breezeways, or other Similar Connections, added by Ord. 1451, provisions eff. 1/1/11.]

Section 110.306.35 Outdoor Storage/Outdoor Display.

(a) Outdoor storage, as defined in Section 110.902.15 and as further regulated in the Washoe County Nuisance Code (WCC Sections 50.300 to 50.310, inclusive), is the outside placement of items and materials that are incidental to the existing principal use of the property, except as provided for herein under subsection (d), for a period of more than seventy-two (72) consecutive hours.

(b) Outdoor Storage on Vacant Lots. No outdoor storage shall occur on a vacant parcel without an existing principal use. No vehicles may be stored or displayed for sale on any vacant lot or at any vacant business location.

(c) Outdoor Storage of Commercial Vehicles. No storage of commercial vehicles shall be allowed on any residentially zoned parcel, unless specifically regulated in another section of this code.

(1) Commercial Vehicles Defined. A commercial vehicle is defined as any vehicle designed, maintained or used for business, commercial, construction or industrial purposes that infringes on the residential character of residential districts; or for the transportation of property in furtherance of commercial enterprise; or having more than two axles on the road; or, any vehicle in excess of eight thousand (8,000) pounds unladen weight. Commercial vehicles includes, but is not limited to: a cement truck, commercial tree-trimming equipment, construction equipment, dump truck, garbage truck, panel truck, semi-tractor, semi-trailer, stake bed truck, step delivery van, tank truck, tar truck, and other vehicles customarily used for commercial or industrial purposes.

(2) Exceptions. The following exceptions to the storage of commercial vehicles shall be allowed in Residential Regulatory Zones:

(i) A vehicle used in a licensed, home-based business may involve one (1) vehicle for delivery of materials to or from the property, not to exceed eight thousand (8,000) pounds gross unladen weight and no larger than two (2) axles.

(ii) A single vehicle limousine service.

(iii) An accessory utility trailer used in a licensed home-based business, provided such trailer does not exceed a maximum length of twenty-four (24) feet, is parked off the street (including any right-of-way), is regularly used off-site in the conduct of the home-based business, and is not used solely for storage or advertising.

(d) General Exceptions to Outdoor Storage Provisions. The following exceptions to the outdoor storage provisions of this section shall be allowed:

(1) When being temporarily stored for the purpose of construction pursuant to and during the time permitted by a valid building permit, provided the items are specifically related to the implementation of the building permit;

(2) When in conjunction with a yard/garage sale with a duration of no more than five (5) consecutive days or three (3) weekends in a given calendar year.

(3) When the covered trash containers are approved by the disposal company for weekly or other regularly scheduled domestic disposal.

(4) Registered recreational vehicles and campers and items typically associated with and used for personal outdoor recreation. Examples of recreational vehicles and items include, but are not limited to, motorized campers, fifth wheel campers and camper trailers, boats and personal watercraft, and motorcycles.

(e) Trash Storage Method and Location. The provisions of this subsection shall apply to all developments except single-family dwellings and duplexes.

(1) Trash enclosure locations shall be located in the side or rear yard unless the Director of Community Development can make a finding that the location of the enclosure in one of these yards would prevent accessibility by a refuse-collecting vehicle.

(2) Trash enclosures shall be constructed in accordance with the following standards:

(i) They shall be fully constructed prior to occupancy of the development;

(ii) They shall be screened on three (3) sides by a solid masonry or wood wall of six (6) feet in height and on one (1) side by a slatted fenced gate (with wheels) of equal height;

(iii) They shall be screened from view from public rights-of-way; and

(iv) Their enclosure locations shall be accessible to refuse-collecting vehicles.

(f) Electrical Cage Enclosures and Storage Tanks. All exterior electrical cage enclosures and storage tanks are to be screened from view from access ways, adjacent streets and residential neighborhoods by a solid fence, wall or mature landscape materials. Any solid fence or wall shall be screened by landscaping.

(g) General Requirements, Outdoor Display. A use in a Commercial or Industrial Regulatory Zone may display products sold or manufactured on-site in the area between the property line and the face of the main building, except that the display shall not be closer than fifteen (15) feet to the front property line.

(h) Outdoor Display for Merchandise in a Commercial or Industrial Regulatory Zone. The outdoor display of merchandise in the area between the front and side property lines and the front and side faces of the main building shall not cover more than fifty (50) percent of this area.

(i) Outdoor Display for Automobiles, Boats, Recreational Vehicles and Heavy Equipment in a Commercial or Industrial Regulatory Zone. The outdoor display of automobiles, boats, recreational vehicles and heavy equipment shall not cover more than eighty-five (85) percent of the area between the front and side property lines and the front and side faces of the main building.

(j) Mobile Home Set Up Permit Required. A valid mobile home set up permit issued by the Department of Building and Safety is required before any fabricated home may be occupied. The placement of a fabricated home on a parcel without a valid mobile home set up permit is classified as outdoor storage of the home and is prohibited in all regulatory zones. This provision does not apply to Fabricated Housing Sales use type pursuant to Articles 302, Allowed Uses, and 304, Use Classification System, or to manufactured homes stored as a wholesaling, storage, and distribution industrial use type pursuant to Articles 302 and 304.

[Section 110.306.35 renamed from "Outdoor Storage" and amended by Ord. 875, provisions eff. 8/3/93. Amended by Ord. 889, provisions eff. 11/29/93; Ord. 899, provisions eff. 5/31/94; Ord. 926, provisions eff. retro to 5/31/94; Ord. 1451, provisions eff. 1/1/11.]

Section 110.306.45 Personal Landing Fields. Personal landing fields are permitted as an accessory use in the General Rural, Low Density Rural, Tourist Commercial, Industrial, and the Public/Semi-Public Facilities Regulatory Zones, subject to a special use permit (see Table 110.302.05.1). Personal landing fields established prior to July 1, 2000 as documented with either the Federal Aviation Administration and/or the Nevada Department of Transportation are exempt from the special use permit and minimum development standard requirements. Aircraft hired on a temporary basis for agricultural spraying operations, and not owned by or based on the property owner's parcel, are exempt from the special use permit and minimum development standard requirements. The following minimum development standards are necessary to establish a new personal landing field:

(a) The edge of the runway/helicopter pad landing surface shall be located to maintain a minimum separation of three hundred (300) feet from any exterior property line to maintain a noise standard of sixty-five (65) decibels Ldn as measured at the property line. Additional landing surface/property line separation may be required as a special use permit condition of approval based on the operational and noise characteristics of the aircraft utilizing the facility.

(b) The property owner shall submit a report by a Nevada registered engineer or erosion control specialist documenting the type of landing surface treatment and maintenance necessary for dust control and erosion control purposes for the weight of aircraft and frequency of landings, and shall provide for adequate drainage consistent with Article 420, Storm Drainage Standards.

(c) A maximum of two (2) aircraft may be stored at a personal landing field.

(d) The personal landing field shall operate as a private facility, for the exclusive use of the landowner, and shall not be operated for commercial purposes. Leasing or rental of airplane hangers or tie-down spaces to any third-party user will not be allowed.

(e) The owner of the personal landing field shall submit documentation to the Federal Aviation Administration so the location of the facility can be published on the FAA Sectional Aeronautical Chart.

(f) The owner of the personal landing field shall maintain a commercially issued general liability insurance policy with a minimum coverage of $1,000,000 combined single limit. The owner shall maintain on file with Washoe County a certificate of insurance and an original endorsement adding Washoe County as an additional insured. Increased amounts of coverage may be based upon usage and level of activity. Washoe County shall determine when increased amounts of liability insurance coverage are required.

[Added by Ord. 1102, provisions eff. 8/11/00, amended by Ord. 1378, provisions eff. 8/1/08.]

Section 110.306.50 Non-municipal Air Strips and Glider Ports. Non-municipal air strips and glider ports are permitted as an accessory use in the General Rural, Low Density Rural, Tourist Commercial, Industrial, and the Public/Semi-Public Facilities Regulatory Zones, subject to a special use permit (see Table 110.302.05.1). Non-municipal air strips and glider ports established prior to July 1, 2000 as documented with either the Federal Aviation Administration and/or the Nevada Department of Transportation are exempt from the special use permit and minimum development standard requirements. The following minimum development standards are necessary to establish a new non-municipal air strip or glider port:

(a) The edge of the runway/helicopter pad landing surface shall be located to maintain a minimum separation of three hundred (300) feet from any exterior property line to maintain a noise standard of sixty-five (65) decibels Ldn as measured at the property line. Additional landing surface/property line separation may be required as a special use permit condition of approval based on the operational and noise characteristics of the aircraft utilizing the facility.

(b) The property owner shall submit a report by a Nevada registered engineer or erosion control specialist documenting the type of landing surface treatment and maintenance necessary for dust control and erosion control purposes for the weight of aircraft and frequency of landings, and shall provide for adequate drainage consistent with Article 420, Storm Drainage Standards.

(c) In addition to the vehicle parking requirements for any other uses on the property, one (1) vehicle parking space will be provided for every aircraft which is stored, or for which tie-down space is provided, at the non-municipal air strip and/or glider port.

(d) The owner of the non-municipal air strip and/or glider port shall submit documentation to the Federal Aviation Administration so the location of the facility can be published on the FAA Sectional Aeronautical Chart.

(e) The owner of the non-municipal air strip and/or glider port shall maintain a commercially issued general liability insurance policy with a minimum coverage of $1,000,000 combined single limit. The owner shall maintain on file with Washoe County a certificate of insurance and an original endorsement adding Washoe County as an additional insured. Increased amounts of coverage may be based upon usage and level of activity. Washoe County shall determine when increased amounts of liability insurance coverage are required.

[Added by Ord. 1102, provisions eff. 8/11/00, amended by Ord. 1378, provisions eff. 8/1/08.]

Section 110.306.53 Cottage Foods. A Cottage Food Operation, as defined and authorized by NRS Chapter 446, is allowed as an accessory use if conducted in the kitchen of a fraternal or social clubhouse, a school, or a religious, charitable or other nonprofit organization, and subject to District Health approval and issuance of a general business license.

[Added by Ord. 1519, provisions eff. 11/1/13.]

Section 110.306.55 Nonconformance. Any accessory use in full compliance with Washoe County Code prior to the adoption of this article, but not in full compliance with this article, shall be considered a nonconforming use subject to the provisions of Article 904, Nonconformance. For the purpose of this article, the nonconforming status shall remain with the parcel (not the property owner), so long as the principal use does not change. When the nonconforming status is due to an accessory use related to keeping animals, the nonconforming status shall remain with the parcel, not the individual animals.

[Added by Ord. 875, provisions eff. 8/3/93. Amended by Ord. 926, provisions eff. retro to 5/31/94; Ord. 1102, provisions eff. 8/11/00.]

[Section 110.306.30 "Agricultural Buildings" renamed from "Agricultural Buildings and Uses" and amended by Ord. 899, provisions eff. 5/31/94; amended by Ord. 926, provisions eff. retro to 5/31/94; and repealed by Ord. 1238, provisions eff. 6/4//04.]

[Section 110.306.40 entitled "Temporary Office Trailers"; Section 110.306.45 entitled "Commercial Coaches"; and Section 110.306.55 entitled "Utilities" repealed by Ord. 875, provisions eff. 8/3/93.]

[Section 110.306.40 "Animals" amended by Ord. 875, provisions eff. 8/3/93; Ord. 926, provisions eff. retro to 5/31/94; and repealed by Ord. 1238, provisions eff. 6/4/04.]

Article 308
HOME OCCUPATIONS

[This Article amended in its entirety by Ord. 875, provisions eff. 8/3/93; Ord. 965, provisions eff. 10/1/96; Ord. 1040, provisions eff. 11-1-98.]

Sections:

110.308.00 Purpose
110.308.05 Applicability

Section 110.308.00 Purpose. The purpose of this article, Article 308, Home Occupations, is to provide for business uses in association with dwellings where such uses will clearly not alter the character or appearance of the residential environment.

Section 110.308.05 Applicability. Home occupations shall be allowed in any regulatory zone which allows dwellings or has a residential unit currently on the property. Home occupations are regulated by Chapter 25 of the Washoe County Code. Home occupations are assigned to the holder of the home business license and are not appurtenant to the land or structure.

Article 310
TEMPORARY USES AND STRUCTURES

Sections:

110.310.00	**Purpose**
110.310.05	**Site Plan Required**
110.310.15	**Allowed Temporary Uses and Structures**
110.310.20	**Circuses, Carnivals or Other Outdoor Entertainment Events**
110.310.25	**Construction Yards**
110.310.30	**House Construction Factories**
110.310.35	**Mobile Homes, Manufactured Homes, Travel Trailers, Commercial Coaches and Recreational Vehicles**
110.310.40	**Uses in New Subdivisions**
110.310.45	**Temporary Contractor's Yards**
110.310.50	**Firewood Sales**

Section 110.310.00 Purpose. The purpose of this article, Article 310, Temporary Uses and Structures, is to establish allowed temporary uses and structures, and standards and conditions for regulating same.

Section 110.310.05 Site Plan Required. For any temporary use subject to the provisions of this article, excluding temporary contractor's offices used to manage the construction of a project, a site plan shall be prepared and presented to the satisfaction of the Director of Community Development. Such site plan shall indicate the location of any permanent uses and structures on the parcel, the temporary use and any temporary structures, all vehicular access points proposed for the temporary use, the location of all required parking, and the location of adequate restroom facilities for the temporary use.

[Amended by Ord. 875, provisions eff. 8/3/93; Ord. 1036, provisions eff. 9/1/98.]

Section 110.310.15 Allowed Temporary Uses and Structures. Temporary uses and structures shall be subject to all the regulations as would be applied to a permanent principal or accessory use located in the same regulatory zone, except as otherwise provided by the regulations of this article. The following temporary uses and structures shall be allowed as specified by the provisions of this section and Chapter 25 of the Washoe County Code. The duration and frequency of temporary uses is established in this section and Chapter 25 of Washoe County Code. The Director of Community Development may impose additional restrictions on the frequency and duration of a temporary use.

(a) Animal Shows. Exhibitions of domestic or large animals for a maximum of seven (7) days.

(b) Pumpkin Patches. Retail sales of pumpkins, squash and related farm produce during the month of October. Clean-up of the site shall occur by November 5 of the year in which a pumpkin patch is conducted.

(c) Christmas Tree Sales. Retail sales of Christmas trees between Thanksgiving and December 31.

(d) Circuses, Carnivals and Other Outdoor Entertainment Events. Excluding activities and events occurring in a permanent entertainment facility, the temporary provision of games, eating and drinking facilities, live entertainment, animal exhibitions, or other similar activities in a tent or other temporary structure. Section 110.310.20, Circuses, Carnivals or Other Outdoor Entertainment Events, provides additional regulations.

(e) Construction Yards. Temporary buildings, structures and storage areas supporting residential development and major construction. Section 110.310.25, Construction Yards, provides additional regulations.

(f) Farm to Fork Events. Temporary Farm to Fork events as defined and authorized by NRS 446. Farm to Fork events are limited to a maximum of two (2) events in a given calendar month. A Farm to Fork event means an event organized on a farm where prepared food is provided for immediate consumption to paying guests. Each date that food is provided to paying guests constitutes a separate event. Per NRS 446, the farm holding the temporary event is not considered a "food establishment."

(g) House Construction Factories. Temporary buildings used for the construction of a multiple or single family dwelling, or the assembly of prefabricated single or multiple family dwelling components, or a combination of both. Section 110.310.30, House Construction Factories, provides additional regulations.

(h) Outdoor Markets. Retail sale or exchange of agricultural goods or new, hand-crafted or secondhand merchandise in a flea-market, bazaar or other outdoor market. In no case shall such activities exceed a total of thirty-one (31) days in any one (1) calendar year.

(i) Indoor Markets. Retail sale or exchange of agricultural goods or new, hand-crafted or secondhand merchandise in a flea-market, bazaar or other indoor market.

(j) Street Fairs. Temporary provision of games, eating and drinking facilities, live entertainment, or similar activities not requiring use of roofed structures.

(k) Uses of Mobile Homes, Manufactured Homes, Travel Trailers, Commercial Coaches and Recreational Vehicles. Temporary use of mobile homes, travel trailers, commercial coaches and recreational vehicles which support the construction of a permanent residence or permanent use. Section 110.310.35, Mobile Homes, Manufactured Homes, Travel Trailers, Commercial Coaches and Recreational Vehicles, provides additional regulations.

(l) Activities in Subdivisions. Temporary activities in new subdivisions and other residential developments which support the sale of dwellings and lots within the same subdivision or residential development. Section 110.310.40, Uses in New Subdivisions, provides additional regulations.

(m) Activities in Shopping Malls or Retail Uses. Temporary tents and other facilities inside shopping malls and retail uses, or an adjoining parking lot to one of these uses, for the retail sale of new merchandise, or entertainment or informational event. Temporary facilities and related activities of this kind held in an adjoining parking lot shall not exceed a total of thirty-one (31) days in any one (1) calendar year.

(n) Contractor's Yard. Temporary buildings, structures, storage areas and processing facilities supporting federal, state or local agency public construction projects. Section 110.310.45, Contractor's Yards, provides additional regulations.

(o) Firewood Sales. Seasonal sales of firewood between September and March, inclusive, that is not part of permanent permitted use. Section 110.310.50, Firewood Sales, provides additional regulations.

(p) Temporary On-site Rental Storage Containers. Temporary on-site rental storage containers obtained from moving or storage companies for the purposes of moving or for storage of possessions at an off-premise storage facility may be allowed on a parcel of land in any land use designation for either a maximum of sixty (60) days, after which they must be removed, or for the duration of a properly issued building permit, after which they must be removed. Temporary on-site rental storage containers may be located only on the sides or rear of a house, and may not be placed in a street right-of-way. Except for the above, temporary on-site rental storage containers may not be used for outside storage longer than sixty (60) days on any parcel of land without having a special use permit for a storage facility for that parcel of land that specifically provides for the use of temporary on-site rental storage containers. Outside stacking of temporary on-site rental storage containers more than two (2) high on any parcel of land is prohibited.

[Amended by Ord. 875, provisions eff. 8/3/93; Ord. 899, provisions eff. 5/31/94; Ord. 1036, provisions eff. 9/1/98; Ord. 1412, provisions eff. 7/3/09; Ord. 1519, provisions eff. 11/1/13.]

Section 110.310.20 Circuses, Carnivals or Other Outdoor Entertainment Events. A circus, carnival or other outdoor entertainment event may be permitted in all regulatory zones for a period not to exceed ten (10) days. Adequate parking and restroom facilities shall be provided for the expected attendance. An event that will have a combination of between three hundred (300) and nine hundred ninety-nine (999) participants and spectators on any one (1) day of the event shall obtain an administrative permit prior to the event. An administrative permit or outdoor festival license shall not be required for events held at or in facilities designed for such events. These facilities include auditoriums, convention facilities, stadiums and parks, but does not extend to ancillary support areas, such as parking lots, if the event is to be held on or in those ancillary support facilities. An event that will have a combination of more than one thousand (1,000) participants and spectators on any one (1) day of the event shall obtain an outdoor festival license as specified in Chapter 25 of the Washoe County Code, instead of an administrative permit.

[Section 110.310.20 renamed from "Circuses, Carnivals, or Other Outdoor Events" and amended by Ord. 875, provisions eff. 8/3/93. Amended by Ord. 1036, provisions eff. 9/1/98.]

Section 110.310.25 Construction Yards. A construction yard operated by one (1) contractor may be located in any regulatory zone for the purpose of storing material and/or prefabricating components of a structure. The construction process can be conducted within or outside a building. Construction yards shall be in accordance with the provisions of this section.

(a) Fencing. A construction yard shall have perimeter fencing not to exceed ten (10) feet in height.

(b) Property Conditions. A construction yard shall only be permitted where the following conditions are true:

(1) On property that has a recorded subdivision map and in which five (5) or more building permits are active for single-family lots;

(2) On property in which a building permit has been issued to construct five (5) or more multiple family dwellings; or

(3) On property that has a recorded commercial or industrial subdivision map and in which five (5) or more building permits are active for separate commercial or industrial structures.

(c) Single Family and Multiple Family Dwellings. A building placed in a construction yard for the purposes of prefabricating components of single family or multiple family dwellings shall be located a minimum of one hundred (100) feet from the lot line of an established use not part of the subdivision in which the construction yard has been established.

(d) Commercial or Industrial Structures. A building placed in a construction yard for the purposes of prefabricating components of commercial or industrial structures shall be located a minimum of one hundred (100) feet from the lot line of an established use.

(e) Outside Activities. Prefabrication of components of dwellings done outside of a building shall be located a minimum two hundred (200) feet from the lot line of an established use not part of the subdivision or structure housing multiple family dwellings. Prefabrication of components of dwellings done outside of a building shall not commence any earlier than 7:00 a.m. and shall cease no later than 7:00 p.m.

(f) Containment of Activities. No prefabrication of components of a single family or multiple family dwelling shall occur outside of a construction yard in any agricultural or residential regulatory zone.

(g) Relationship to Fences. Storage of material shall be a minimum of ten (10) feet from the fence surrounding the construction yard and no higher than two (2) feet above the fence.

(h) Location. Storage of material and prefabrication of components for single family dwellings in a construction yard shall only be permitted for the subdivision that the construction yard is located within or for the multiple dwellings for which the construction yard was established.

(i) Abandonment of Construction Yards. A construction yard shall be abandoned, the fence and any building removed and the site revegetated within three (3) months from the date that four (4) or fewer building permits are active for the subdivision in which the construction yard is located, or within two (2) months after a Certificate of Occupancy has been issued for the structure housing multiple family dwellings for which the construction yard was established. The County Engineer shall be provided financial assurances that these provisions will be met prior to establishment of the construction yard.

[Amended by Ord. 875, provisions eff. 8/3/93; Ord. 1036, provisions eff. 9/1/98.]

Section 110.310.30 House Construction Factories. House construction factories may be located in any regulatory zone subject to the issuance of a special use permit. House construction factories shall comply with the provisions of this section.

(a) Area. A house construction factory shall be located on a minimum two (2) acre parcel of land, located in an area that has a recorded subdivision map for which the house construction factory is intended to provide dwellings, and located a minimum of one thousand (1,000) feet from the lot line of an established use not part of the subdivision in which the house construction factory is located.

(b) Commencement. A house construction factory shall commence operation within one (1) year from the date that the special use permit is issued.

(c) Location of Houses. Dwellings constructed or assembled in a house construction factory shall only be for the subdivision within which the house construction factory is located. For purposes of this section, a subdivision is defined as a tentative subdivision map that has been approved by the Board of County Commissioners and has all or portions of the map properly recorded.

(d) Confinement of Activities. All construction and assembly activity shall take place within the confines of a fenced factory site. Interior finishing is the only activity that may be performed outside the house construction factory.

(e) Storage. Outside storage of material shall be located adjacent to the house construction factory and a minimum of one thousand (1,000) feet from the lot line of an established use not part of the subdivision in which the house construction factory is located and shall be fenced with a view-screening fence or berm no higher than ten (10) feet in height. Material stored outside of the building shall not extend more than two (2) feet above the fence.

(f) Transport. The transport of dwellings from the factory to an improved site shall only occur between the hours of 7:00 a.m. and 6:00 p.m.

(g) Safety. The house construction factory shall have adequate fire fighting and warning devices installed prior to the issuance of a Certificate of Occupancy. The devices shall be reviewed and approved by the appropriate fire protection jurisdiction.

(h) Security. The house construction factory shall have security provisions reviewed by the appropriate public law enforcement agency prior to the issuance of a Certificate of Occupancy.

(i) Restoration. Financial assurance shall be provided to the County in an amount satisfactory to the County to insure that the house construction factory is removed, fencing is removed and the site revegetated with six (6) months from the date that four (4) or fewer building permits are active for the subdivision for which the house construction factory was established.

[Amended by Ord. 1036, provisions eff. 9/1/98.]

Section 110.310.35 Mobile Homes, Manufactured Homes, Travel Trailers, Commercial Coaches and Recreational Vehicles.

(a) Temporary Occupancy. A mobile home, manufactured home, travel trailer, commercial coach or recreational vehicle may be occupied as a legal use pending construction of a permanent single-family dwelling in any regulatory zone allowing agricultural or residential uses, provided that a building permit is issued at the same time for the permanent residence. The permanent residence shall be completed and the mobile home, manufactured home, or commercial coach will be removed from the property within eighteen (18) months from the original date of issuance of the building permit, or within thirty (30) days of issuance of a Certificate of Occupancy, whichever is sooner. A two thousand dollar ($2,000) bond to cover the cost of removal of the mobile home, manufactured home or commercial coach, or satisfactory proof of removal, will be placed on file with the Building and Safety Division prior to the issuance of the Certificate of Occupancy. The use of a travel trailer or recreational vehicle as a temporary occupancy will cease with the disconnection of all on-site utility services. One (1) extension for an additional eighteen (18) month period may be granted with a building permit extension or renewal, but in no case will the temporary occupancy be permitted after thirty-seven (37) months from the original date of issuance of the building permit. A mobile home, manufactured home, travel trailer, commercial coach or recreational vehicle located within a flood hazard area or limited flooding area may be subject to the requirements of Article 416, Flood Hazards.

(b) Temporary Contractor's Offices. A mobile home, manufactured home, travel trailer, commercial coach or recreational vehicle may be used as a contractor's office to manage the construction of a permanent use, provided that a building permit, to include a grading permit, is issued at the same time for the permanent use.

(c) Temporary Commercial Use Types and Offices. Any commercial use type and office may be established in commercial coaches, or other temporary structures rated for human occupancy during the construction, major remodel, or reconstruction of a permanent structure on a parcel provided that a building permit, to include a grading permit, is issued at the same time for the permanent use. The permanent structure shall be completed and the commercial coach will be removed from the property within eighteen (18) months from the original date of issuance of the building permit, or within thirty (30) days of issuance of a Certificate of Occupancy, whichever is sooner. A two thousand dollar ($2,000) bond to cover the cost of removal of the commercial coach, or satisfactory proof of removal, will be placed on file with the Building and Safety Division prior to the issuance of the Certificate of Occupancy. One (1) extension for an additional eighteen (18) month period may be granted with a building permit extension or renewal, but in no case will the temporary occupancy be permitted after thirty-seven (37) months from the original date of issuance of the building permit.

(d) Temporary Watchman's Quarters. A mobile home, manufactured home, travel trailer, commercial coach or recreational vehicle may be used for security purposes, including watchman's quarters, for a permitted mining operation or permitted earth products excavations/processing activity, public park, recreational area, or other commercial or industrial use which by its nature is temporary or is located in a remote area where security is necessary outside of

normal business hours. Prior to the establishment of this use, the requirements of Article 808, Administrative Permits, must be satisfied.

(e) Temporary Mining Office. A mobile home, manufactured home, travel trailer, commercial coach or recreational vehicle may be used for an office or scale house for a permitted mining operation or a permitted earth products excavation/processing activity. Parking shall be required as provided by the permit authorizing the mining operation or earth products excavation/processing activity. Prior to the establishment of this use, the requirements of Article 808, Administrative Permits, must be satisfied.

(f) Temporary Camping. A self-contained travel trailer or recreational vehicle may be used by nonpaying guests or relatives on any private ownership parcel within the Residential Regulatory Zones; General Rural, Parks and Recreation, and Open Space Regulatory Zones subject to the following provisions:

(1) The temporary camping visit does not extend beyond fourteen (14) consecutive days, with no more than four (4) visits per calendar year.

(2) The property owner provides written permission that the visit is authorized without any form of compensation.

(3) No discharge of any litter, sewage, effluent or other matter shall occur except into sanitary facilities designed to dispose of the material.

(4) No water or sanitary sewer connections are allowed to any buildings on the property during the temporary camping visit.

(g) Temporary Occupancy for the Care of the Infirm. One (1) self-contained travel trailer or recreational vehicle may be occupied as a legal use for person(s) responsible for the care of an infirm resident of a permanent single-family dwelling. Prior to the establishment of this use, the requirements of Article 808, Administrative Permits, must be satisfied. The administrative permit application shall include a signed affidavit from a Nevada licensed physician identifying the need for such on-premise care. The administrative permit must be renewed on an annual basis to ensure that the need for such on-premise care still exists. The travel trailer or recreational vehicle shall be located on the parcel to provide as much screening as practical from being viewed from the street. No discharge of any litter, sewage, effluent or other matter shall occur except into sanitary facilities designed to dispose of the material. Any temporary utility connections shall be to the satisfaction of the Building and Safety Division.

(h) Temporary Contractor or Owner-builder's Materials or Equipment Trailers and/or Portable Storage Containers. Upon issuance of a valid building permit from the Building and Safety Department, a contractor or owner-builder may establish temporary factory-built units to support the development of the project. A site development permit for the trailers/containers is required to assure compliance with all applicable health, engineering and planning codes. The temporary units must be located immediately adjacent to the site of the construction activity. All storage containers shall be free from damage, shall not be structurally altered, shall be free from severe rust, and shall not have exposed bare metal. Such units and/or containers shall be removed within thirty (30) days of the final building inspection or Certificate of Occupancy by the Building and Safety Department, or upon the expiration or revocation of the building permit.

(i) Portable Sanitation Huts. Upon approval by the District Health Department, portable sanitation huts may be allowed on a construction site, a special event or other temporary public or private event or activity, a mining or aggregate facility, or other use approved by the District Health Department subject to the following conditions:

(1) All units shall be maintained, hauled, and the effluent disposed of, in strict accordance with District Health Department requirements governing sewage, wastewater, and sanitation.

(2) Units placed on private property shall be set outside the required setbacks for the regulatory zone for the particular parcel. No easement, drainage, or right-of-way shall be encroached upon by a portable sanitation hut.

(3) All portable sanitation huts must be removed from the property within seven (7) days after construction, or the event, activity, mining, or other approved use is completed.

[Section 110.310.35 renamed from "Mobile Homes, Travel Trailers, Commercial Coaches and Recreational Vehicles" and amended by Ord. 875, provisions eff. 8/3/93. Amended by Ord. 1036, provisions eff. 9/1/98; Ord. 1412, eff. 7/3/09.]

Section 110.310.40 Uses in New Subdivisions.

(a) On-site Sales and Construction Management Offices. In any regulatory zone, a temporary office for real estate sales and construction management for lots and homes may be permitted within a subdivision, provided that general, unrelated real estate business and construction management business shall not be conducted at such office, and provided that the operators of the office shall submit and have approved an agreement that the office shall be removed as provided in Subsection (c) of this section. On-site sales and construction management activities can be conducted either in a model home constructed as a part of the subdivision, or in a mobile home, manufactured home, travel trailer, commercial coach, or recreational vehicle temporarily located within the subdivision.

(b) Off-site Offices. Temporary off-site real estate offices for subdivision sales may be permitted, subject to the issuance of a special use permit. General real estate business shall not be conducted at such offices.

(c) Removal. All temporary offices and signs shall be removed within thirty (30) days of the following:

(1) When the original sales program has resulted in the first time sale of one hundred (100) percent of the lots of the subdivision;

(2) Prior to the one hundred (100) percent sale, when the sales program has been moved to a location outside the subdivision;

(3) Prior to the one hundred (100) percent sale, when the temporary office has not been used for ninety (90) days; or

(4) When a final subdivision map has not been recorded within the required time.

[Amended by Ord. 875, provisions eff. 8/3/93; Ord. 1036, provisions eff. 9/1/98.]

Section 110.310.45 Temporary Contractor's Yards. A temporary contractor's yard may be located in any regulatory zone for the purposes of storing equipment and material, and processing material for a federal, state, local agency, or public utility construction project. Temporary contractor's yard shall be in accordance with the provisions of this section.

(a) Fencing. In the event that a temporary contractor's yard will have stockpiling of materials or storing of equipment for more than two weeks (14 days), that temporary contractor's yard shall have fencing along its boundaries not to exceed ten (10) feet in height.

(b) Property Conditions. A temporary contractor's yard for the storage of material and equipment may be located on property designated with any regulatory zone pursuant to written consent of the property owner.

(c) County Roadways, Rights-of-Way and Easements. Temporary storage of materials and equipment may be located on County roadways, rights-of-way and/or easements for construction or maintenance of County roadways, rights-of-way or easements with appropriate traffic control and with permission from the County Public Works Director.

(d) Flood Hazards and Grading Standards. Temporary construction sites shall be permitted if they do not conflict with the requirements of Articles 416 and 438.

(e) Material Storage. Any material that is subject to being transported by winds shall be tarped, tied down or treated to prevent it from being transported by wind.

(f) Processing of Material/Fabrication of Products. Any processing of material (i.e. rock crushing, batch plant or fabrication of products) for the construction of federal, state, local agency , or public utility construction projects shall be located on property that is not closer than two thousand (2,000) feet to property with an established residential, civic or commercial use, and shall require an administrative permit prior to establishment of the processing operation. The yard shall have fencing along all boundaries not to exceed ten (10) feet in height.

(g) Period of Time for Use of Temporary Contractor's Yard. The temporary contractor's yard may only be established for a period of time commencing fifteen (15) days prior to the commencement of construction of the federal, state, local agency, or public utility construction project and ending fifteen (15) days after the completion of the public construction project.

(h) Abandonment of Temporary Contractor's Yard. A temporary contractor's yard shall be abandoned, the fence and any buildings and/or preprocessing/ fabricating facilities shall be removed within the period stipulated in (f) of this section. The site shall be revegetated if vegetation existed at the site prior to installation of the temporary contractor's yard or restored to like or better condition within three (3) months of the vacation of the temporary contractor's yard. An assurance acceptable to the County Engineer or Community Development Director shall be provided ensuring that these provisions will be met prior to establishment of the contractor's yard.

[Added by Ord. 875, provisions eff. 8/3/93. Section 110.310.45 renamed from "Contractor's Yards" and amended by Ord. 1349, provisions eff. 11/2/07.]

Section 110.310.50 Firewood Sales. The temporary, seasonal sales of firewood that is not part of a permanent permitted use may be located in a General Commercial (GC) and Industrial (I) Regulatory Zone between the months of September and March, inclusive. Firewood sales shall be in accordance with the provisions of this section.

(a) Period of Use. Between the months of September and March, inclusive, the temporary sales of firewood on a parcel of land shall not exceed three (3) consecutive months.

(b) Site Requirements. The temporary sales of firewood shall only be permitted on a parcel of land providing all of the following are met:

(1) The sales area is located a minimum of twenty (20) feet from any street adjacent to the parcel of land, driveway adjacent to or located on the parcel of land, or entrance to the parcel of land.

(2) The sales area does not occupy any area that is required parking for a permanent permitted use on the property.

(3) One (1) parking space is provided for each employee during a peak hour shift; one (1) parking space is provided for the loading and unloading of firewood, the space being large enough to accommodate a tractor and trailer; and three (3) parking spaces provided for customers. None of the required parking spaces shall be ones that are required as parking for a permanent permitted use on the property.

(4) On-site bathroom facilities, including temporary facilities approved by the District Health Department, are available to serve employees and customers.

(5) On-site security is provided to protect the firewood from theft or vandalism.

(6) A source of water is available on-site to provide fire protection.

(7) At the cessation of the temporary use, the site shall be cleared of all firewood, any wood by-products (e.g. chips), equipment and storage/ security facilities, and the site shall be restored to its original condition.

(c) Limitation on Use of Property. The following limitations shall apply to the temporary sale of firewood:

(1) No cutting or splitting of wood shall be permitted on-site.

(2) Only one (1) firewood sales operation shall be permitted on a parcel of land, whether it is a temporary or an existing permanent firewood sales operation.

(3) No temporary overnight security shall be permitted for temporary firewood sales.

(d) Requirement of Business License. Prior to the establishment of a temporary firewood sales operation, a general business license shall be obtained.

[Added by Ord. 899, provisions eff. 5/31/94.]

[Previous Section 110.310.10 entitled "Parking Requirements" repealed by Ord. 1036, provisions eff. 9/1/98.]

Article 312
FABRICATED HOUSING

Sections:

110.312.00	**Purpose**
110.312.05	**Placement Standards**
110.312.10	**Development Standards**
110.312.15	**Design Standards**
110.312.20	**Submittal Requirements**
110.312.25	**Conversion of Manufactured Home to Real Property**
110.312.30	**Procedure and Findings for Placing a Manufactured Home that is Less Than One Thousand Two Hundred Square Feet in Size**
110.312.35	**Findings for Placing a Manufactured Home or Mobile Home Within an Area Designated Trailer (TR) Overlay Prior to May 26, 1993**

Section 110.312.00 Purpose. The purpose of this article, Article 312, Fabricated Housing, is to establish general requirements for fabricated housing to include modular homes, manufactured homes and mobile homes.

[Amended by Ord. 875, provisions eff. 8/3/93.]

Section 110.312.05 Placement Standards. Fabricated housing that is not located within a manufactured home park shall comply with the provisions of this section.

(a) Modular Homes. Modular home placements shall be subject to the same regulations and standards as site-built homes, and comply with the provisions of Washoe County Code Chapter 100.

(b) Manufactured Homes. Manufactured home placements are allowed as follows:

(1) Multi-sectional manufactured homes not less than one thousand two hundred (1,200) square feet in size and constructed within six (6) years of the date of placement (as defined in Article 902) are allowed on an individual lot which permits a single family residence with the exception that new placements of manufactured homes are not allowed on parcels that have the current regulatory zones of either General Commercial, Neighborhood Commercial/Office, Tourist Commercial, Industrial, Open Space, Parks and Recreation, or Public/Semi-Public Facility, or any historic district established by Washoe County;

(2) Multi-sectional manufactured housing units and single manufactured housing units transported to the site are allowed in areas designated as Trailer (TR) Overlay zone in effect prior to May 26, 1993, with the exception that new placements of manufactured homes are not allowed on parcels that have the current regulatory zones of General Commercial, Neighborhood Commercial/Office, Tourist Commercial, Industrial, Open Space, Parks and Recreation, or Public/Semi-Public Facility; and

(3) Manufactured homes in a manufactured home park are allowed, provided they are in compliance with Article 314; Manufactured Home Parks.

(c) Mobile Homes. Mobile home placements are allowed as follows:

(1) Mobile homes are allowed in areas which were designated as Trailer (TR) Overlay zone in effect prior to May 26, 1993, with the exception that new placements of mobile homes are restricted to individual lots that had a previous mobile home or manufactured home assessed valuation within twelve (12) months of the new set-up permit application date. New mobile home placements are no longer allowed on parcels that have the current regulatory zones of either General Commercial, Neighborhood Commercial/Office, Tourist Commercial, Industrial, Open Space, Parks and Recreation, or Public/Semi-Public Facility.

(2) Mobile homes in a manufactured home park are allowed, provided they are in compliance with Article 314, Manufactured Home Parks.

[Section 110.312.05 entitled "Requirements" amended and renamed "Placement Standards" by Ord. 875, provisions eff. 8/3/93. Amended by Ord. 1089, provisions eff. retro to 1/1/00; Ord. 1023, provisions eff. 7/1/98; Ord. 1347, provisions eff. 11/2/07.]

Section 110.312.10 Development Standards. All new set-up and installations of mobile homes and manufactured homes on individual lots shall comply with the following development standards:

(a) Density and Intensity Standards. Manufactured homes and mobile homes shall be subject to the maximum number of units allowed per acre and height of structures as set forth in Article 402, Density/Intensity Standards, for the regulatory zone in which they are located.

(b) Lot Standards. Manufactured homes and mobile homes shall be subject to the minimum and maximum size of lots and the minimum average lot width as set forth in Article 404, Lot Standards, for the regulatory zone in which they are located.

(c) Building Placement Standards. Manufactured homes and mobile homes shall be subject to the building setbacks and yard requirements as set forth in Article 406, Building Placement Standards, for the regulatory zone in which they are located.

(d) Permanent Affixing of Manufactured Home to a Lot. A manufactured home shall be required to be permanently affixed on the lot on which it is placed at the time of its placement and must demonstrate compliance with any wind, snow, and seismic requirements identified for the area in which it is placed, except for a manufactured home or mobile home placed in an area designated Trailer (TR) Overlay in effect prior to May 26, 1993.

(e) Parking. Manufactured homes and mobile homes shall be subject to the parking standards as set forth in Article 410, Parking and Loading. At a minimum, one (1) of the required parking spaces shall be contained within a garage except that a carport may be considered to have met this requirement for a manufactured home or mobile home placed in an area designated as Trailer (TR) Overlay in effect prior to May 26, 1993. This requirement may be waived through an

application for a variance in accordance with Article 804, Variances, in cases where the deletion would be consistent with the surrounding neighborhood. Where required, the external material and roofing of the garage or carport shall be the same as that of the dwelling unit.

(f) Skirting. Complete perimeter solid skirting, or a material and color complimentary to the manufactured home or mobile home, shall be provided from the bottom of the fabricated home to the ground surface no later than the inspection date. The exterior covering of the fabricated home can be used to satisfy the skirting requirement, except that, when a solid concrete or masonry perimeter foundation is used, the exterior covering material need not extend below the top of the foundation.

(g) Foundation for Fabricated Homes Outside of an Area Designated as Trailer (TR) Overlay Prior to May 26, 1993. The fabricated home must be placed on a foundation system that meets the structural requirements of Chapter 100 for conversion to real property and a manufactured home must be converted to real property. The permanent foundation must be safe and secure and comply with the manufacturer's set-up instructions or a federal agency's (HUD/FHA, VA, FNMA or FmHA) approved permanent foundation system. The foundation system must be set so that the height at the perimeter does not exceed a maximum of thirty-six (36) inches as measured from the bottom of the frame (e.g. support I-beam) to the surrounding finished grade, with at least one (1) section of the perimeter not exceeding sixteen (16) inches in height. The transportation hitch and wheels must be removed from the mobile home or manufactured home at the time of final inspection, and the equipment must be either physically removed from the parcel or stored under the unit and be completely concealed by the skirting or perimeter foundation.

(h) Foundation for Fabricated Homes Within an Area Designated as Trailer (TR) Overlay Prior to May 26, 1993. The fabricated home must be placed on a foundation system for conversion to real property. The permanent foundation must be safe and secure and comply with the manufacturer's set-up or federal agency's (HUD/FHA, VA, FNMA or FmHA) approved permanent foundation system. The foundation system must be set so that the height at the perimeter does not exceed a maximum of thirty-six (36) inches as measured from the bottom of the frame (e.g. support I-beam) to the surrounding finished grade, with at least one (1) section of the perimeter not exceeding sixteen (16) inches in height. The transportation hitch and wheels must be removed from the mobile home or manufactured home at the time of final inspection, and the equipment must be either physically removed from the parcel or stored under the unit and be completely concealed by the skirting.

(i) Flood Areas. Manufactured homes and mobile homes located in flood hazard areas or limited flooding areas shall comply with the requirements of Article 416, Flood Hazards.

[Ord. 874, provisions eff. 5/24/93, delayed the initial effectuation of subparagraphs (d) "Parking", (f) "Foundation", and (g) "Roof" under Section 110.312.10 entitled "Development Standards", until the adoption of new language for this section. Amended by Ord. 875, provisions eff. 8/3/93; Ord. 939, provisions eff. 11/1/95; Ord. 959, provisions eff. 7/26/96; Ord. 1089, provisions eff. retro to 1/1/00.]

Section 110.312.15 Design Standards. Fabricated homes with an original invoice date on or after January 1, 1994 shall comply with the following appearance standards to ensure aesthetic compatibility with conventional site-built construction:

(a) Exterior Siding. Exterior siding shall be made of non-reflective and non-metallic materials. Acceptable siding materials include wood, stucco, tile, brick, stone or other masonry materials, any synthetic material that has the appearance of wood, stucco, tile, brick, stone or other masonry material, or any combination thereof.

(b) Roof Structure. All roof structures shall be sloped and provide an eave projection of no less than six (6) inches measured from the vertical side of the manufactured home. The eave projection is required on all four sides. The roof on the residential structure or on any garage or carport shall be made of non-reflective materials.

(c) Roofing Material. All roofing materials shall comply with the provisions of the local uniform building code except that metal roofing must be non-reflective. Reflective metallic roofing surfaces shall not be permitted on the residential structure or on any garage or carport.

[Added by Ord. 875, provisions eff. 8/3/93. Amended by Ord. 1089, provisions eff. retro to 1/1/00.]

Section 110.312.20 Submittal Requirements. The permit application for fabricated homes on individual lots shall include the elements listed in this section.

(a) Site Plan. A scaled site plan shall be submitted which depicts the location of the proposed fabricated home and other existing and proposed improvements on the site. The site plan shall clearly identify any structural additions to be added to the manufactured home (i.e. garage, carport, porch).

(b) Foundation Plan. A foundation plan shall be submitted which illustrates the type of foundation system to be utilized for the fabricated home. For a manufactured home outside of an area designated Trailer (TR) Overlay prior to May 26, 1993, the foundation plan shall also identify how the supports that permanently affix the unit to the property will be masked.

(c) Statement of Compliance with Covenants, Conditions and Restrictions. A notarized statement certifying that any Covenants, Conditions or Restrictions; or deed restrictions; applicable to the property on which the unit is to be placed do not prohibit the placement of a manufactured home. This provision does not apply to a manufactured home or mobile home placed in an area designated Trailer (TR) Overlay prior to May 26, 1993.

[Section 110.312.20 entitled" Submittal Requirements" renumbered from 110.312.15 and amended by Ord. 875, provisions eff. 8/3/93. Amended by Ord. 1089, provisions eff. retro to 1/1/00.]

Section 110.312.25 Conversion of Manufactured Home to Real Property. At the time of final inspection of a manufactured home for occupancy, the property owner shall have completed an Affidavit of Conversion of Mobile Home to Real Property and submitted to the Building and Safety Department said affidavit for completion by the building inspector of that portion of the affidavit that the manufactured home has been permanently affixed to the property. No final occupancy of the manufactured home may occur until the completed affidavit with the Building and Safety Department's certification that the unit is permanently affixed to the property has been filed with

the County Assessor's Office. This provision does not apply to a manufactured home or mobile home placed in an area designated Trailer (TR) Overlay prior to May 26, 1993.

[Added by Ord. 1089, provisions eff. retro to 1/1/00.]

Section 110.312.30 Procedure and Findings for Placing a Manufactured Home that is Less Than One Thousand Two Hundred Square Feet in Size. The authority that issues the set-up permit for a manufactured home placed outside of an area designated Trailer (TR) Overlay prior to May 26, 1993, may permit a manufactured home between one thousand two hundred (1,200) square feet and six hundred forty (640) square feet providing the following findings can be made:

(a) Fifty-one (51) percent of the main dwelling units within a radius of three hundred (300) feet of the lot on which the manufactured home is to be located are less than one thousand two hundred (1,200) square feet in size;

(b) The placement of a manufactured home one thousand two hundred (1,200) square feet in size would result in a violation of the established yard requirements of the regulatory zone in which the lot was located; or

(c) The lot on which the unit is to be placed is ten (10) acres or greater in size.

[Section 110.312.25 entitled "Findings" renumbered from 110.312.20 and amended by Ord. 875, provisions eff. 8/3/93. Renumbered from 110.312.25, renamed from "Findings", and amended by Ord. 1089, provisions eff. retro to 1/1/00.]

Section 110.312.35 Findings for Placing a Manufactured Home or Mobile Home Within an Area Designated Trailer (TR) Overlay Prior to May 26, 1993. In addition to those findings required for the applicable permit for fabricated homes on individual lots, the approval authority shall also find that the appearance of the proposed fabricated home will be compatible with the neighborhood site built homes.

[Added by Ord. 1089, provisions eff. retro to 1/1/00.]

[Ord. 875, provisions eff. 8/3/93, changed Article 312 name from "Factor-Built Housing" to "Fabricated Housing".]

Article 314
MANUFACTURED HOME PARKS

Sections:

110.314.00	**Purpose**
110.314.05	**Requirements**
110.314.10	**Nonconformance**
110.314.15	**Minimum Size of Site**
110.314.20	**Manufactured Home Spaces**
110.314.25	**Setbacks**
110.314.30	**Parking Standards**
110.314.35	**Circulation**
110.314.40	**Landscaping**
110.314.45	**Exterior Boundary Screening**
110.314.50	**Recreational Areas**
110.314.55	**Common Storage Areas**
110.314.60	**Lighting**
110.314.65	**Signs**
110.314.70	**Flood Hazards**
110.314.75	**Provision of Services**
110.314.80	**Prohibitions**
110.314.85	**Management**

Section 110.314.00 Purpose. The purpose of this article, Article 314, Manufactured Home Parks, is to set forth the regulations for the development of manufactured home parks.

[Amended by Ord. 875, provisions eff. 8/3/93.]

Section 110.314.05 Requirements. Manufactured home parks are allowed in areas designated as Trailer (TR) Overlay zone in effect prior to May 26, 1993, with the exception that new manufactured home parks are no longer allowed on parcels that have the current regulatory zones of either General Commercial, Neighborhood Commercial/Office, Tourist Commercial, Industrial, Open Space, Parks and Recreation, or Public/Semi-Public Facility. New manufactured home parks may be permitted in the High Density Suburban Regulatory Zone and the Low Density Urban Regulatory Zone subject to a special use permit as set forth in Article 810, Special Use Permits.

[Amended by Ord. 875, provisions eff. 8/3/93; Ord. 1023, provisions eff. 7/1/98, Ord. 1378, provisions eff. 8/1/08.]

Section 110.314.10 Nonconformance. Any manufactured home park in full compliance with Washoe County regulations in affect prior to the adoption of this article, but which is not in full compliance with this article, shall be considered a nonconforming use subject to the provisions of Article 904, Nonconformance.

[Amended by Ord. 875, provisions eff. 8/3/93.]

Section 110.314.15 Minimum Size of Site. The minimum size of a manufactured home park site is three (3) acres.

Section 110.314.20 Manufactured Home Spaces. Manufactured home spaces within a manufactured home park shall comply with the provisions of this section.

(a) Area. The minimum manufactured home park space area is four thousand (4,000) square feet.

(b) Width. The minimum manufactured home park space width is fifty-five (55) feet.

Section 110.314.25 Setbacks. Manufactured homes within a manufactured home park shall comply with the setback provisions of this section. Setbacks are measured from the manufactured home space boundary line.

(a) Front Setback. A minimum front setback of ten (10) feet is required on interior streets.

(b) Side Setback. A minimum side setback of five (5) feet is required, provided that zero (0) lot line developments shall be allowed as long as there is a minimum of ten (10) feet between manufactured home units.

(c) Rear Setback. A minimum rear setback of ten (10) feet is required.

Section 110.314.30 Parking Standards. Manufactured home parks shall be subject to the parking standards as set forth in Article 410, Parking and Loading.

Section 110.314.35 Circulation. The automobile and pedestrian circulation system within the manufactured home park shall comply with the provisions of this section.

(a) Minimum Road Widths. Minimum road widths shall be as follows:

(1) Twenty-four (24) feet for roads on which parking is prohibited;

(2) Twenty-eight (28) feet for roads on which parking is allowed on one side only; and

(3) Thirty-six (36) feet for roads on which parking is permitted on both sides.

(b) Walkways and Bikeways. All manufactured home parks shall provide internal walkways, separate from interior roadways, which connect each manufactured home site and provide access to all common areas and public streets. All pedestrian walkways shall be a minimum of three (3) feet and shall be appropriately surfaced.

(c) Snow Removal. All manufactured home parks proposed above the 5,000 foot elevation shall provide for snow removal and snow storage areas.

(d) Paving. All vehicle parking spaces and driveways shall be paved. All streets shall be paved with a minimum of two (2) inches of asphalt and a four (4) inch base.

(e) Lighting. All streets shall be lighted at night with at least the equivalent of one (1) 150-watt lamp for each one hundred (100) lineal feet of street, or a guard light

each three hundred (300) feet. All lighting shall be directed away from neighboring and adjacent properties.

(f) Maximum Speed Limit. All streets shall have a maximum posted speed limit of ten (10) miles per hour.

Section 110.314.40 Landscaping. In addition to the requirements of Article 412, Landscaping, exposed ground surfaces in all parts of the manufactured home park, other than parking spaces and driveways, shall be covered with vegetation, decorative rock or other similar material in order to prevent soil erosion and eliminate objectionable dust.

[Amended by Ord. 875, provisions eff. 8/3/93.]

Section 110.314.45 Exterior Boundary Screening. All manufactured home parks shall provide screening along their exterior boundaries. Such screening shall comply with this section.

(a) Adjoining Lots. All manufactured home parks shall be enclosed on all sides, except the portion of the site that borders a public right-of-way for a street or highway, by a solid decorative wall or fence that is at least six (6) feet but not more than seven (7) feet in height.

(b) Public Rights-of-Way. The portion of all manufactured home parks that borders a public right-of-way or a street or highway shall be screened by a hedge or a decorative wall or fence. The screening shall be at least three (3) feet but no more than four (4) feet in height.

(c) Variances. The applicant may apply for a variance in accordance with Article 804, Variances, for waiver of all or part of the perimeter landscaping requirements if, due to the nature of the existing topography or other existing conditions, it is unreasonable to require a wall, fence or screen.

Section 110.314.50 Recreational Areas. All manufactured home parks with more than ten (10) manufactured home sites shall provide recreational areas which comply with this section.

(a) General. All manufactured home parks with more than ten (10) manufactured home sites shall provide at least one (1) substantial area of group usable open space that is accessible from all areas of the park. The recreational area shall include outdoor recreational facilities for both active and passive recreation, including playground facilities.

(b) Size. The cumulative size of the recreational areas shall be not less than ten (10) percent of the gross manufactured home park. Required setbacks, greenbelts and walkways shall not be counted towards the required area.

(c) Landscaping. Recreational areas shall be landscaped in accordance with plans approved as part of the special use permit.

(d) Parking. Parking shall be provided for the recreational space as required by Article 410, Parking and Loading.

Section 110.314.55 Common Storage Areas. Common storage areas shall be provided for the residents of the manufactured home park for the storage of recreational vehicles, trailers, travel trailers and other licensed or unlicensed vehicles. This area shall total not less than fifty (50)

square feet for each manufactured home site. All common storage areas shall be screened from manufactured home park residents by a screen not less than seven (7) feet in height.

Section 110.314.60 Lighting. Adequate lighting shall be provided along walks and interior roads, and for parking areas and other facilities.

Section 110.314.65 Signs. All signs in manufactured home parks shall comply with the provisions of Division Five.

Section 110.314.70 Flood Hazards. A manufactured home park located in a flood hazard area or in a limited flooding area shall comply with the requirements of Article 416, Flood Hazards.

Section 110.314.75 Provision of Services. All manufactured home parks shall provide services that comply with the provisions of this section.

(a) Electricity and Gas. A manufactured home park shall provide direct electrical and gas service to each manufactured home space from a public or governmental entity that provides such services, if those services are available.

(b) Water. A manufactured home park shall provide direct water service to each manufactured home space from a public utility or governmental entity that provides such services, if those services are available.

[Amended by Ord. 1376, provisions eff. 7/4/08.]

Section 110.314.80 Prohibitions. All manufactured home parks are subject to the prohibitions in this section.

(a) Accessory Structures. Accessory structures shall not be permitted within a manufactured home park, except for the following:

(1) One carport or garage; one cabana, ramada, patio, deck or similar structure, whether covered or not; and one storage building not to exceed one hundred forty-four (144) square feet in gross floor area per manufactured home space; and

(2) Accessory structures, such as laundry rooms, recreation rooms and check-in offices, which are required for the well-being of park residents or for the management of the park, as determined by the Director of Community Development.

(b) Commercial Uses. No commercial uses shall be permitted, except those that directly serve only the tenants of the park.

(c) Site-built Buildings. A manufactured home park shall have no site-built buildings, except for the following:

(1) Recreational buildings;

(2) Accessory structures, as specified in Subsection (a) of this section; and

(3) One (1) dwelling unit for the caretaker or manager.

Section 110.314.85 Management. The management of all manufactured home parks shall comply with the provisions of this section.

(a) General Responsibilities. The holder of a valid Washoe County business license for the operation of a manufactured home park shall be responsible for the compliance with this article, and any other applicable ordinances or statutes. He or she shall maintain the manufactured home park in a neat, orderly and sanitary condition at all times.

(b) Register. The holder of the license shall be responsible for maintaining a register of the occupants of the park, and shall provide the register upon demand by a duly appointed representative of Washoe County. Such register shall indicate the following:

(1) The name of each occupant;

(2) The make, model and year of all manufactured homes;

(3) The license number and year of license and owner of each manufactured home; and

(4) The state issuing such license.

(c) Plan. A permanent copy of the final approved plan for the manufactured home park shall be conspicuously posted and maintained at every entrance to the site and the holder of the license shall be responsible for maintenance of the park in accordance with the final approved plan. The holder of the license shall stake or otherwise permanently designate all manufactured home spaces in accordance with the final approved plan for the manufactured home park. These designations shall be maintained so as to be readily ascertainable at all times.

Article 316
RECREATIONAL VEHICLE PARKS

[This Article amended in its entirety by Ord. 875, provisions eff. 8/3/93.]

Sections:

110.316.00	**Purpose**
110.316.05	**Requirements**
110.316.10	**Nonconformance**
110.316.15	**Minimum Size of Site**
110.316.20	**Development Standards**
110.316.25	**Required Facilities**
110.316.30	**Recreational Vehicle Spaces**
110.316.35	**Circulation**
110.316.40	**Exterior Boundary Screening**
110.316.45	**Accessory Commercial Services**
110.316.50	**Prohibitions**
110.316.55	**Management**

Section 110.316.00 Purpose. The purpose of this article, Article 316, Recreational Vehicle Parks, is to set forth the regulations for the development of recreational vehicle parks.

Section 110.316.05 Requirements. Recreational vehicle parks are allowed in those regulatory zones as set forth in Article 302, Allowed Uses.

Section 110.316.10 Nonconformance. Any recreational vehicle park not in compliance with the provisions of this article shall be deemed nonconforming.

Section 110.316.15 Minimum Size of Site. The minimum size of a site is two (2) acres.

Section 110.316.20 Development Standards. Recreational vehicle parks shall comply with the provisions of this section.

(a) Setbacks. Recreational vehicle sites and off-street parking spaces shall comply with the principal building setbacks and yard requirements as set forth in Article 406, Building Placement Standards, for the regulatory zone in which the recreational vehicle park is located.

(b) Parking Standards. Recreational vehicle parks shall be subject to the parking standards as set forth in Article 410, Parking and Loading.

(c) Lighting. All streets shall be lighted at night with at least the equivalent of one (1) 150-watt lamp for each one hundred (100) lineal feet of street, or a guard light each three hundred (300) feet. All lighting shall be directed away from neighboring and adjacent properties.

(d) Covering of Exposed Ground Surfaces. Exposed ground surfaces in all parts of the recreation vehicle park, other than parking and streets, shall be paved or

covered with stone screening or other materials, or protected with a vegetative growth, any of which are capable of preventing soil erosion and eliminating objectionable dust.

(e) Paving. All recreational vehicle spaces, parking spaces and roads shall be paved.

(f) Landscaping. All recreational vehicle parks shall be landscaped in accordance to the provisions of Article 412, Landscaping.

Section 110.316.25 Required Facilities. All recreational vehicle parks shall provide the following facilities in compliance with this section:

(a) Hookup Facilities. All recreational vehicle sites shall be provided with full power and sewage hookup facilities.

(b) Sewage Facilities. All recreational vehicle parks shall be serviced by a sewage disposal system that includes a sewage disposal plant. The use of septic tanks shall not be permitted.

(c) Recreational Space. All recreational vehicle parks with more than ten (10) recreational vehicle sites shall provide recreational areas which comply with this subsection.

(1) All recreation vehicle parks with more than ten (10) sites shall provide at least one (1) substantial area of group usable open space that is accessible from all areas of the park. The recreational area shall include outdoor recreational facilities for both passive and active recreation.

(2) The cumulative size of the recreational areas shall not be less than two-and-one-half (2.5) percent of the gross recreational vehicle site. Required setbacks, greenbelts and walkways shall not be counted towards the required area.

(3) Recreational areas shall be landscaped in accordance with plans approved as part of the special use permit.

(d) Sanitary Station. All recreational vehicle parks shall provide at least one (1) sanitary station for the discharge of vehicle retention tanks. All sanitary stations shall comply with any applicable statutes and ordinances and any rules and regulations of the Washoe County District Health Department.

(e) Restroom and Bath Facilities. All recreational vehicle parks shall provide restroom and bath facilities which conform to regulations of the Washoe County District Health Department.

(f) Water Supply. All recreational vehicle parks shall provide an accessible, adequate, safe and potable water supply for domestic purposes within one hundred (100) feet from each recreational vehicle space. The water supply shall conform to any applicable statutes and ordinances, rules and regulations of the Washoe County District Health Department.

Section 110.316.30 Recreational Vehicle Spaces. All recreational vehicle parks shall provide vehicle spaces that comply with the provisions of this section.

(a) Pull-Through Spaces. Pull-through spaces shall be provided to the greatest practical extent possible, but in no case less than twenty (20) percent of all spaces provided for recreational vehicles. Pull-through spaces allow forward entry into and out of the space.

(b) Automobile Accommodation and Storage. All recreational vehicle sites shall be designed to include a multi-purpose storage space to accommodate at least one (1) automobile in addition to the recreational vehicle.

(c) Minimum Net Area. The minimum net area per recreational vehicle space is six hundred ninety (690) square feet.

(d) Minimum Width. The minimum net recreational vehicle space width is twenty-three (23) feet.

Section 110.316.35 Circulation. Roads servicing recreational vehicle parks shall comply with the provisions of this section.

(a) Entrance Roads. Roads which service entrances to recreational vehicle parks shall provide two-way access.

(b) Internal Roads. Internal roads within a recreational vehicle park shall comply with the provisions in this subsection.

(1) All recreational vehicle parks shall be serviced by at least one (1) interior road of continuous two-way circulation.

(2) The use of non-through interior roads shall be minimized. Such roads shall not exceed six hundred (600) feet in length and shall end in cul-de-sacs providing adequate radius for the turnaround of recreational vehicles.

(3) Each recreational vehicle site shall have frontage on the interior road servicing it.

(c) Road Widths. Road widths for interior roads shall be as follows:

(1) Twenty-four (24) feet in clear width where two-way traffic is required for ingress and egress; and

(2) Twelve (12) feet in clear width for one-way traffic provided the one-way road originates from and terminates in a two-way road.

(d) Road Materials. All roads shall be paved with a minimum of two-and-one-half (2.5) inches of asphalt and six (6) inch base.

Section 110.316.40 Exterior Boundary Screening. A six (6) foot solid wall or fence shall be provided at each interior site boundary line and set back a distance of not less than ten (10) feet from any boundary line adjoining the public street. The area between the wall or fence shall be landscaped and permanently maintained.

Section 110.316.45 Accessory Commercial Services. Limited commercial services catering exclusively to park users may be permitted, provided such services are necessary for the benefit of park users and will not duplicate services available in adjoining areas. Typical services may

include snack shops, laundries and mini-markets. All such accessory commercial services shall be approved by the Planning Commission in conjunction with special use permit review.

Section 110.316.50 Prohibitions. All recreational vehicle parks are subject to the prohibitions in this section.

(a) Residency Limit. Rental and occupancy space shall be limited to sixty (60) consecutive days except for a caretaker or manager.

(b) Site-built Buildings. A recreational vehicle park shall have no site-built buildings, other than the following:

(1) Recreational buildings;

(2) Accessory commercial buildings, as specified in Section 110.316.45; and

(3) One (1) dwelling unit for the use of a caretaker or manager.

(c) Mobile Homes. A recreational vehicle park shall have no mobile homes other than one (1) for the use of a caretaker or manager.

(1) The site for the mobile home shall comply with the provisions of Article 314, Manufactured Home Parks.

(2) If a mobile home is used to provide housing for a caretaker or manager, a conventional single family dwelling for the use of a caretaker or manager shall not be permitted.

(d) Use of Facilities. Facilities within the park shall be used only by the occupants of the park and their guests.

(e) Commercial Uses. There shall be no commercial uses or activities within a park except for those authorized by Section 110.316.45.

(f) Accessory Structures. Accessory structures shall not be permitted within a recreational vehicle park, except for the following:

(1) One cabana, ramada, patio or similar structure, and one detached storage building per recreational vehicle space; and

(2) Community recreation buildings and facilities, laundry, car and trailer wash, battery charging station, water fill up, and boat or storage facilities serving the recreational vehicle park only.

Section 110.316.55 Management. The management of all recreational vehicle parks shall comply with the provisions of this section.

(a) General Responsibilities. The holder of a valid Washoe County business license for the operation of the recreational vehicle park shall be responsible for the compliance with this article, and any other applicable ordinances or statutes. He or she shall maintain the recreational vehicle park in a neat, orderly and sanitary condition at all times.

(b) Tax. The holder of the license shall be responsible for the collection and payment of the Washoe County room tax.

Article 318
VACATION TIME SHARE UNITS

Sections:

110.318.00	**Purpose**
110.318.05	**Applicability**
110.318.10	**Requirements for Application**
110.318.15	**Review Procedures**
110.318.20	**Conditions of Approval**

Section 110.318.00 Purpose. The purpose of this article, Article 318, Vacation Time Share Units, is to allow vacation time share units in the appropriate areas of Washoe County.

Section 110.318.05 Applicability. Vacation time share units are allowed as set forth in Article 302, Allowed Uses.

Section 110.318.10 Requirements for Application. Special use applications for vacation time share units shall include, at a minimum, the following:

(a) Instruments for Time-share Estate.

(1) The legal description, street address or other description sufficient to identify the property;

(2) Identification of time periods by letter, name, number or combination thereof;

(3) Identification of the time-share estate and the method whereby additional time-share estates may be created;

(4) The formula, fraction or percentage of the common expenses and any voting rights assigned to each time-share estate and, where applicable, to each unit in a project that is not subject to the time-share program; and

(5) Any restrictions on the use, occupancy, alteration or alienation of time-share intervals.

(b) Instruments for Time-share Users.

(1) Identification by name of the vacation time-sharing project and street address where the vacation time-sharing project is situated;

(2) Identification of time periods, type of units, and the units that are in the time-share program and the length of time that each of the units are committed to the time-share program;

(3) In the case of a vacation time-sharing project, identification of which units are in the time-share program and the method whereby other units may be added, deleted or substituted; and

(4) Any restrictions on the use, occupancy, alteration or transfer of a time-share interval.

Section 110.318.15 Review Procedures. The review procedure for vacation time share applications shall be in accordance with the provisions of Article 302, Allowed Uses, and Article 810, Special Use Permits.

Section 110.318.20 Conditions of Approval. A special use permit issued pursuant to this article shall be irrevocable for the term of the time-share program, provided the conditions of the permit are complied with.

Article 320
BED AND BREAKFAST ESTABLISHMENTS

[This Article amended in its entirety by Ord. 875, provisions eff. 8/3/93.]

Sections:

110.320.00	**Purpose**
110.320.05	**Applicability**
110.320.10	**Requirements for Application**
110.320.15	**Development Requirements**
110.320.20	**Findings**

Section 110.320.00 Purpose. The purpose of this article, Article 320, Bed and Breakfast Establishments, is to allow for the inclusion of bed and breakfast establishments in unincorporated areas of Washoe County.

Section 110.320.05 Applicability. Applications for bed and breakfast establishments may be accepted as set forth in Article 302, Allowed Uses.

Section 110.320.10 Requirements for Application. Applications shall include a site plan, drawn to scale, which includes, at a minimum, the elements listed in this section.

(a) Lot Specifications. The configuration and boundary dimensions of the lot on which the bed and breakfast establishment is proposed to be located.

(b) Building Specifications. The location and dimensions of all existing or proposed structures.

(c) Parking Specifications. The location and dimensions of all on-site parking spaces, which shall conform to Article 410, Parking and Loading.

(d) Adjacent Land Uses. The uses on all lots surrounding the proposed bed and breakfast establishment.

Section 110.320.15 Development Requirements. All discretionary use permits for a bed and breakfast establishment shall, at a minimum, include the requirements of this section.

(a) Conformity with Plans. The establishment shall conform to all approved plans.

(b) On-site Operator. The operator of the establishment shall reside on the site.

(c) Length of Stay. Length of stay for guests shall be limited to a maximum of seven (7) contiguous nights.

(d) Parking Spaces. The location of required parking space shall not create any more adverse visual impact than that of surrounding uses.

(e) Codes. Prior to issuance of a Certificate of Occupancy, all applicable building, fire and health codes shall be complied with.

(f) Business License. Prior to the commencement of business, a business license shall be obtained.

(g) Revise Conditions. The Board of County Commissioners reserves the right to review and revise the conditions of approval should it be determined that a subsequent license or permit issued by the County violates the intent of the permit.

(h) Taxes. Responsibility for payment of applicable room taxes shall reside with the owner and/or the operator.

Section 110.320.20 Findings. The approving authority shall make the findings provided in this section, in addition to the general findings required for special use permit approval, when recommending approval for a bed and breakfast establishment.

(a) Traffic. The residential character of the neighborhood will not be changed due to increased traffic in the neighborhood caused by the use.

(b) Commercial Nature. The residential character of the neighborhood will not be changed due to the commercial nature of the use.

(c) Dwelling Exists. The single-family dwelling has been constructed.

(d) Private Controls. The proposed use does not violate the provisions of any applicable covenants, conditions and restrictions governing the property. The burden shall be upon the applicant to provide appropriate documentation to support this finding.

(e) Noise Levels. The proposed use will maintain acceptable residential noise standards as specified in Article 414, Noise and Lighting Standards.

(f) Hours of Operation. The hours of operation are consistent with the residential character of the neighborhood.

[This Section amended by Ord. 919, provisions eff. 2/1/95.]

Article 322
GROUP CARE FACILITIES

Sections:

110.322.00	**Purpose**
110.322.05	**Applicability**
110.322.10	**Review Standards and Guidelines**

Section 110.322.00 Purpose. The purpose of this article, Article 322, Group Care Facilities, is to provide special regulations pertaining to group care facilities in order to preserve the quality of care provided to people using the facilities.

Section 110.322.05 Applicability. The provisions of this article shall apply to uses classified as group care in Article 304, Use Classification System. Group care facilities are allowed in those regulatory zones as set forth in Article 302, Allowed Uses.

[Amended by Ord. 959, provisions eff. 7/26/96; Ord. 1485, provisions eff. 3/27/12.]

Section 110.322.10 Review Standards and Guidelines. Group care facilities shall comply with the provisions of this section.

(a) Floor Plan. An interior sketch of the floor plan of the home or facility, to scale, shall be submitted with the required development approval application. The sketch shall contain information as required by the Director of the Department of Community Development.

(b) Exterior Yard Area. A sketch, to scale, of the exterior yard area to be used for group care purposes shall be submitted containing information as required by the Director of the Department of Community Development.

(c) Interior Space. A minimum of twelve hundred (1,200) square feet of interior space shall be provided for the first six (6) facility users, and one hundred fifty (150) square feet of interior space for each additional facility user. Rooms which may be included in this calculation include areas where care activities will be conducted, including bedrooms used for sleeping, recreation rooms, food preparation areas, living rooms and family rooms. Rooms which may not be included in this calculation include closets, halls, garages and bathrooms.

(d) Outdoor Recreation Area. A minimum of six hundred (600) square feet of outdoor recreation area shall be provided for the first six (6) facility users, and seventy-five (75) square feet of outdoor recreation area for each additional facility user.

(1) Areas which may not be included in calculating outdoor recreation area include side yards less than ten (10) feet in width and areas containing swimming pools, spas or other water bodies unless covered and deemed safe pursuant to state regulations.

(2) Neighborhood greenbelt and park space may be used to satisfy the outdoor recreation area requirement if these alternative areas are located in immediate proximity to the facility, are appropriate for recreation, and proper insurance coverage has been obtained for them.

(3) All outdoor recreation areas, except those described in Subsection (d)(2) of this section, shall be enclosed by walls or fences not less than six (6) feet in height. Should existing fencing be less than six (6) feet in height, the review authority may approve such alternative fencing if, upon review of adjacent uses, supervision ratios and facility floor plans, it determines that the existing fence height will not be detrimental to the health, safety or welfare of facility users.

(e) Garages. Garages shall be prohibited as a group care facility recreation area unless:

(1) Alternative on-site parking is available to meet minimum residential parking requirements; and

(2) The garage is improved to meet building and fire code regulations as a habitable space.

(f) Location of Rooms. Rooms used for care activities shall not be located above the first story unless the facility is equipped with an automatic fire sprinkler system approved by the appropriate fire protection agency.

(g) Fire Exits. All facilities shall have no less than two (2) legal exits for fire purposes, pursuant to the requirements of the appropriate fire protection agency.

(h) Public Service Access. The applicant shall develop and will implement a public service access plan providing or arranging for transportation, as necessary, for group care residents. The plan shall specifically describe the means by which residents will gain access to bus or other public transportation routes, shopping locations, medical, dental or other health care facilities, and government offices.

(i) Parking Plan. The applicant shall develop and will implement a parking plan indicating the maximum number of vehicles to be parked on and off the site, projected needs for parking at the site, and means to satisfy the projected needs.

(j) Overconcentration. The establishment of the proposed group care facility will not result in an overconcentration of group care facilities in the neighborhood. Overconcentration will be presumed when the establishment of the group care facility would result in a group care facility being spaced closer than fifteen hundred (1,500) feet to another group care facility.

(k) Yard Maintenance. The applicant will provide adequate exterior maintenance to the facility and surrounding yard and setback areas. This shall include a plan demonstrating provisions for regular yard and landscape irrigation and maintenance, and other items of routine maintenance.

(l) Neighborhood Response Program. The applicant shall develop and will implement a neighborhood response program which provides a procedure for immediate response to incidents and complaints arising out of group care activities. This procedure shall include a method of assuring that the owner or

permittee is notified of any incident, that the owner or permittee will personally investigate the matter, and that any person making a complaint or reporting the incident will receive a response of action taken or a reason why no action needs to be taken. In addition, the owner or permittee shall establish a fixed time on a weekly basis when he or she will be present to meet residents and discuss neighborhood problems relative to the group care facility.

(m) Emergency Response Plan. The applicant shall prepare and file an emergency response plan with all local emergency service providers, including police, fire and ambulance. The plan shall include evacuation procedures, and shall identify emergency vehicle entrances and rear and front building entrances. In addition, the plan shall encourage no light/no siren responses, except in emergency situations.

(n) Licensing, Certificates and Permits. As a prerequisite to the approval of issuance of any rezoning, variance or special use permit that is necessary to operate a group care facility, the applicant must obtain any licenses or certifications that are required by federal, state or local authorities. If the applicant does not have all such licenses or certification at the time of application, the rezoning, variance or special use permit may be provisional or conditionally approved on obtaining such licenses or certification.

[Amended by Ord. 959, provisions eff. 7/26/96; Ord. 1088, provisions eff. 1/28/00; Ord. 1347, provisions eff. 11/2/07; Ord. 1485, provisions eff. 3/27/12.]

[Section 110.322.15 entitled "Findings" amended by Ord. 875, provisions eff. 8/3/93 and repealed by Ord. 959, provisions eff. 7/26/96.]

Article 324
COMMUNICATION FACILITIES

Sections:

110.324.00	**Purpose**
110.324.05	**Exemptions**
110.324.10	**Commercial Satellite Dish Antennas: Ground Mounted**
110.324.15	**Commercial Satellite Dish Antennas: Roof Mounted**
110.324.20	**Private Communication Antennas: General**
110.324.25	**Private Communication Antennas: Front Yard**
110.324.30	**Private Communication Antennas: Additional Height**
110.324.35	**Commercial Antennas**
110.324.40	**Wireless Communication/Cellular Facilities: Definitions**
110.324.45	**Wireless Communication/Cellular Facilities Preferred Placement**
110.324.50	**Wireless Communication/Cellular Facilities Placement Standards**
110.324.55	**Significant Gap Coverage**
110.324.60	**Wireless Communication/Cellular Facilities Permitting Requirements**
110.324.65	**Denial Requirements**
110.324.70	**Appeals**
110.324.75	**Special Use Permit Required: Findings**
110.324.80	**Assessments for Actual Costs Incurred**

Section 110.324.00 Purpose. The purpose of this article, Article 324, Communication Facilities, is to set forth the regulations for antenna systems and wireless communication facilities consistent with applicable directives and standards issued by the Federal Communications Commission (FCC), the Federal Aviation Administration (FAA) and contained within Nevada Revised Statutes (NRS). Health and safety concerns related to antennas and wireless communication facilities include avoiding property damage from falling antenna support structures, proper placement to avoid visual obstructions along rights-of-way, and discouraging access to attractive nuisances by unauthorized people. An additional intent of this article is to balance the need for a seamless, ubiquitous, and reliable personal wireless services network with the local interest in protecting public safety and maintaining high aesthetic standards. Aesthetic concerns related to antennae and wireless communication facilities include limiting visual clutter and assuring that aesthetic ramifications of placement are considered for neighborhoods, roadways, ridgelines, parks and public trail systems.

[Amended by Ord. 890, provisions eff. 11/29/93; Ord. 1004, provisions eff. 1/30/98; Ord. 1242, provisions eff. 7/23/04.]

Section 110.324.05 Exemptions. The following antenna systems are exempt from this article:

(a) Residential Television Reception Aerial Antennas. Television reception aerial antenna systems that are designed to receive locally transmitted television signals for personal use within a residential dwelling unit are exempt from the provisions of this article.

(b) Small Diameter Satellite Dish Antenna Systems. Television, radio and internet reception satellite dish antenna systems that are thirty-six (36) inches or less in diameter are exempt from the provisions of this article.

[Added by Ord. 890, provisions eff. 11/29/93. Amended by Ord. 1242, provisions eff. 7/23/04.]

Section 110.324.10 Commercial Satellite Dish Antennas: Ground Mounted. A satellite dish antenna may be mounted on the ground in non-residential regulatory zones accordance with this section.

(a) Satellite Dish Size. The satellite dish antenna shall not exceed thirty-six (36) feet in diameter.

(b) Mounting Support Height. The satellite dish mounting support structure shall not exceed a height of seventeen (17) feet above the ground surface.

(c) Motor Noise. Any driving motor shall be encased in protective guards and muffled against noise.

(d) Screening. Screening is required for all satellite dish antennas that exceed ten (10) feet in diameter, located in non-residential regulatory zones adjacent to residentially zoned property. The required screening shall shield views of the satellite dish antenna from the adjacent residential parcels. The satellite dish antenna may be screened around the base of the antenna or along the common property line. A waiver from the screening requirement can be obtained pursuant to Article 804, Variances, if the satellite dish antenna is sufficiently set back from the residential parcel to minimize its impact.

(e) Front Yard Placement. A satellite dish antenna may be placed in the front area of a parcel if an administrative permit is obtained pursuant to Article 808, Administrative Permits, and in accordance with the provisions of this subsection:

(1) The base of the satellite dish antenna and driving motor house shall be screened to the satisfaction of the Director of Community Development;

(2) The applicant shall demonstrate that locating the satellite dish antenna in the area between the face of the building and the side or rear property line would result in obstruction of the antenna's reception window; furthermore, such obstruction involves factors beyond the control of the applicant;

(3) The applicant shall demonstrate that locating the satellite dish antenna in the required front area of the parcel will not impair the required line-of-sight from adjacent driveways or streets;

(4) Location in the area between the face of the building and the side or rear property line prevents the commercial satellite dish antenna from receiving a complete signal; and

(5) Location of the satellite dish antenna in the area between the face of the building and the front property line does not visually impact surrounding properties.

[Amended by Ord. 875, provisions eff. 8/3/93; Ord. 959, provisions eff. 7/26/96 Renumbered from 110.324.10 and amended by Ord. 890, provisions eff. 11/29/93. Amended by Ord. 1234, provisions eff. 5/21/04. Renumbered and renamed from 110.324.15 "Satellite Dish Antennas: Roof Mounted" and amended by Ord. 1242, provisions eff. 7/23/04.]

Section 110.324.15 Commercial Satellite Dish Antennas: Roof Mounted. A satellite dish antenna may be mounted on the roof of a building structure in non-residential regulatory zones in accordance with the provisions of this section.

(a) Dish Size. In all non-residential regulatory zones, the dish shall not exceed thirty-six (36) feet in diameter.

(b) Support Structure Height. The satellite dish antenna mounting support structure shall not exceed a height of seventeen (17) feet above the roof surface, regardless of whether the roof is flat, or sloping perpendicular to, or parallel with the front lot line.

(c) Screening. The base of the satellite dish antenna and driving motor shall be screened at the discretion of the Director of Community Development or his/her authorized representative.

(d) FCC and FAA Regulations. The size and height of the satellite dish antenna shall be in compliance with all FCC and FAA regulations.

(e) Minimal Visual Impact. The satellite dish antenna, including guy wires, supporting structures and accessory equipment, is located and designed so as to minimize the visual impact on surrounding properties and from public streets.

[Amended by Ord. 875, provisions eff. 8/3/93. Renumbered from 110.324.15 and amended by Ord. 890, provisions eff. 11/29/93. Amended by Ord. 1234, provisions eff. 5/21/04. Renumbered and renamed from 110.324.20 "Satellite Dish Antennas: Roof Mounted" and amended by Ord. 1242, provisions eff. 7/23/04.]

Section 110.324.20 Private Communication Antennas: General. Private communication antennas, including antenna support structures, are allowed as accessory uses in all regulatory zones pursuant to the provisions of this article.

(a) Height. The retractable height of a private communication antenna is limited to the height limitation of a main structure allowed in the regulatory zone in which the antenna is erected with a bonus of up to ten (10) feet.

(b) Location. Private communication antennas are allowed within any side or rear yard area of a parcel provided they maintain the setbacks from the property lines listed in this article. Private communication antennas may be placed in the front area of the parcel between the property line and the face of the building provided the setback from the front property line listed in this article is maintained, and if an administrative permit consistent with this article is obtained.

(c) Setback. Private communication antennas shall maintain the setbacks of the regulatory zone in which they are located.

(d) Commercial Anti-Climb Device or Security Fencing. Fencing shall be erected either around the entire side and rear of the property or around the private communication antenna. In lieu of fencing, the antenna shall be secured with a

commercial anti-climb device. The installation of the anti-climb device or security fencing shall assure the facility is protected from climbing by unauthorized persons.

(e) Building Code. All private communication antenna support structures require a building permit in compliance with the requirements of Chapter 100, Buildings and Construction, of the Washoe County Code.

[Amended by Ord. 875, provisions eff. 8/3/93. Renumbered and renamed from 110.324.20 "Private Antennas: General" and amended by Ord. 890, provisions eff. 11/29/93. Renumbered from 110.324.25 and amended by Ord. 1242, provisions eff. 7/23/04.]

Section 110.324.25 Private Communication Antennas: Front Yard. A private communication antenna may be placed in the front area of a parcel if an administrative permit is obtained pursuant to Article 808, Administrative Permits, and in accordance with the provisions of this section.

(a) Application. In addition to the submittal requirements as stated in Article 808, Administrative Permits, the applicant shall demonstrate that:

(1) Locating the private communication antenna in the area between the face of the building and the front property line does not impair the required line-of-sight from adjacent driveways or streets;

(2) Fencing shall be erected around the private communication antenna. In lieu of fencing, the antenna shall be secured with a commercial anti-climb device. The installation of the anti-climb device or security fencing shall assure the facility is protected from climbing by unauthorized persons; and

(3) There are no practical locations in the rear or side yard area of the parcel in which to locate the private communication antenna.

(b) Administrative Permit Findings. In addition to those findings required in Article 808, Administrative Permits, for placement of a private communication antenna in the front area of a parcel, the following findings shall be made:

(1) There are no practical locations in the rear or side yard area of the parcel in which to locate the private communication antenna;

(2) Locating the private communication antenna in the required front yard does not impair the required line-of-sight from adjacent driveways or streets; and

(3) Mitigation has been provided for visual impacts to the neighborhood.

[Amended by Ord. 875, provisions eff. 8/3/93. Renumbered and renamed from 110.324.25 "Private Antennas: Front Yard" and amended by Ord. 890, provisions eff. 11/29/93. Amended by Ord. 1234, provisions eff. 5/21/04. Renumbered from 110.324.30 and amended by Ord. 1242, provisions eff. 7/23/04.]

Section 110.324.30 Private Communication Antennas: Additional Height. A private communication antenna support structure may exceed the height restrictions within this article if an administrative permit is obtained pursuant to Article 808, Administrative Permits, and in accordance with the provisions of this section.

(a) Application. In addition to the submittal requirements in Article 808, Administrative Permits, the application shall state the reason why the additional height of the private communication antenna support structure is necessary.

(b) Administrative Permit Findings. In addition to those findings required in Article 808, Administrative Permits, the following findings must be made:

(1) The height of the private communication antenna support structure is necessary to receive or transmit a signal that meets the applicant's needs; and

(2) The height of the private communication antenna support structure shall be in compliance with all Federal Communications Commission (FCC) and Federal Aviation Administration (FAA) regulations.

[Amended by Ord. 875, provisions eff. 8/3/93. Renumbered and renamed from 110.324.30 "Private Antennas: Height" and amended by Ord. 890, provisions eff. 11/29/93. Amended by Ord. 1234, provisions eff. 5/21/04. Renumbered and renamed from 110.324.35 "Private Communication Antennas: Height" and amended by Ord. 1242, provisions eff. 7/23/04.]

Section 110.324.35 Commercial Antennas. Commercial antennas, excluding wireless communication facilities, but including satellite dishes, used for commercial broadcasting/receiving purposes are a principal use subject to the issuance of a special use permit and are classified under the commercial antennas use type in Article 304, Use Classification System. Where a commercial antenna is collocated with a wireless communication facility, the permitting process of the commercial antenna will take precedence. These antennas shall comply with the provisions of this section.

(a) General. Commercial antennas are subject to the following provisions:

(1) A commercial antenna shall be located a minimum distance from all property lines equal to forty (40) percent of the height of the antenna support structure [i.e. a one-hundred (100)-foot-tall commercial antenna shall be a minimum of (0.40 x 100 =) 40 feet from any property line];

(2) All commercial antennas require a building permit in compliance with the requirements of Chapter 100, Buildings and Construction, of the Washoe County Code; and

(3) Fencing shall be erected either around the entire side and rear of the property or around the commercial communication antenna. In lieu of fencing, the antenna shall be secured with a commercial anti-climb device. The installation of the anti-climb device or security fencing shall assure the facility is protected from climbing by unauthorized persons.

(b) Application. In addition to the submittal requirements in Article 810, Special Use Permits, the applicant shall submit a statement explaining the purpose of the commercial antenna, including if the antenna is to be used for new or existing service and the proposed access route for the antenna site.

(c) Findings. In addition to the finding required for approval in Article 810, Special Use Permits, the following findings shall be made:

(1) The proposed commercial antenna is necessary to meet the applicant's and the public's needs;

(2) The location of the commercial antenna is compatible with existing and proposed uses in the general vicinity; and

(3) The proposed commercial antenna is provided with adequate safety equipment and aesthetic treatments to be visually compatible with uses in the general vicinity.

[Amended by Ord. 875, provisions eff. 8/3/93. Renumbered from 110.324.35 and amended by Ord. 890, provisions eff. 11/29/93. Amended by Ord. 1004, provisions eff. 1/30/98. Renumbered from 110.324.40 and amended by Ord. 1242, provisions eff. 7/23/04. Amended by Ord. 1378, provisions eff. 8/1/08.]

Section 110.324.40 Wireless Communication/Cellular Facilities: Definitions. Wireless communication facilities, including antennas mounted on structures and freestanding monopoles and lattice towers and supporting equipment which are used for the commercial broadcasting/receiving of telecommunication transmissions that are regulated under the Telecommunications Act of 1996 are a principal use and are classified under the communication facilities use type in Article 304, Use Classification System. The following definitions apply to the regulation of wireless communication facilities contained in this article:

(a) Antenna. An antenna is defined for the purposes of Sections 110.324.40 through 110.324.80 as a device that transmits and/or receives an electronic signal for the purposes of facilitating the communication of personal wireless services that has the meaning ascribed to it in 47 U.S.C. § 332(c)(7)(C) as that provision existed on July 1, 2003.

(1) Antenna Supporting Structure. An antenna supporting structure is a structure that supports all radiating arrays and antennas for a communications system.

(2) Commercial Signage Mounted Antenna. A commercial signage mounted antenna means a communications receiving and/or transmitting device that is attached to an on-site free-standing sign that has been lawfully erected.

(3) Facade Mounted Antenna. A facade mounted antenna means a communications receiving and/or transmitting device that is attached to the side of a lawfully constructed structure. A lawfully constructed structure includes a building housing mechanical equipment, a utility service structure or a penthouse that is placed on the roof of a building.

(4) Lattice Tower Mounted Antenna. A lattice tower mounted antenna means a communications receiving and/or transmitting device that is attached to a ground mounted, free-standing or guyed lattice structure that is erected for the purposes of supporting one (1) or more antennas.

(5) Monopole Mounted Antenna. A monopole mounted antenna means a communications receiving and/or transmitting device that is attached to a ground mounted, free-standing pole that is erected for the purposes of supporting one (1) or more antennas.

(6) Rooftop Mounted Antenna. A rooftop mounted antenna means a communications receiving and/or transmitting device that is attached to the roof of a lawfully constructed structure.

(7) Slim Line Pole. A slim line pole is a ground mounted, free-standing communications receiving and/or transmitting device with flush mounted antenna.

(8) Specialty Pole Mounted Antenna. A specialty pole mounted antenna means a communications receiving and/or transmitting device that is attached to a ground mounted, free-standing pole that is erected for another purpose, such as a flag pole, lamp post, or ball field backstop support.

(b) Collocation. Collocation means siting antennas owned and/or operated by separate companies on the same antenna supporting structure, monopole, lattice tower or specialty pole. Collocation may include adding antenna to an existing facility by a separate company or the construction of a facility planned for the use of several separate companies.

(c) Equipment Shelter/Cabinet. An equipment shelter/cabinet is an enclosure that houses supporting equipment for an antenna that is located on the same parcel or structure as the equipment shelter/cabinet.

(d) Stealth Design. Stealth design means a wireless communications facility's support structure, antennas or accessory equipment structure that is designed to blend in with the existing physical environment, and reduce visual impacts to the extent possible by virtue of being camouflaged as another common structure, for example, a clock tower, silo, church steeple or tree.

(e) Wireless Communication Facility. A wireless communication facility means all antennas and antenna supporting equipment such as poles, shelters or cabinets.

[Added by Ord. 1004, provisions eff. 1/30/98. Amended by Ord. 1220, provisions eff. 11/7/03. Renumbered and renamed from 110.324.45 "Wireless Communication Facilities: Definitions" and amended by Ord. 1242, provisions eff. 7/23/04.]

Section 110.324.45 Wireless Communication/Cellular Facilities Preferred Placement. As a policy of Washoe County, the following types and locations of antennas are preferred in descending order. In the case of antennas (d) through (k), the wireless carrier must certify that alternatives (a) through (c) were not available and present a justification in the application packet indicating why alternatives (a) through (c) were not chosen.

(a) Facade Mounted Antenna. Facade mounted antenna on a building used for commercial or industrial purposes, a building located in a commercial or industrial regulatory zone (General Commercial—GC, Tourist Commercial—TC, Neighborhood Commercial/Office—NC, Industrial—I, Parks and Recreation—PR, Public/Semi-Public Facilities—PSP), or on a structure used for utility purposes in any regulatory zone.

(b) Rooftop Mounted Antenna. Rooftop mounted antenna on a building used for industrial or commercial purposes, a building located in a commercial or industrial regulatory zone (General Commercial—GC, Tourist Commercial—TC, Neighborhood Commercial/Office—NC, Industrial—I, Parks and Recreation—

PR, Public/Semi-Public Facilities—PSP), or on a structure used for utility purposes.

(c) Collocation. Collocation of a new antenna on an existing facility in any land use designation.

(d) Specialty Pole Mounted Antenna. Specialty pole mounted antenna on a pole used for public, utility or communication, other than wireless communication, purposes.

(e) Facade Mounted Antenna. Facade mounted antenna on a building used for any purpose other than those in (a).

(f) Rooftop Mounted Antenna. Rooftop mounted antenna on a building used for any purpose other than those in (b).

(g) Specialty Pole Mounted Antenna. Specialty pole mounted antenna on a pole used for any purpose other than those in (d).

(h) Commercial Signage Mounted Antenna. Commercial signage mounted antenna.

(i) Slim Line Monopole Mounted Antenna. Monopole mounted antenna utilizing a slim line design.

(j) Monopole Mounted Antenna. Monopole mounted antenna utilizing an antenna supporting structure.

(k) Lattice Tower. Lattice tower mounted antenna within an established communication site.

[Subsection (a) of Section 110.324.50 entitled "Wireless Communication Facilities Placement Standards" was renumbered and renamed to 110.434.45 "Wireless Communication/Cellular Facilities Preferred Placement" and amended by Ord. 1242, provisions eff. 7/23/04.]

Section 110.324.50 Wireless Communication/Cellular Facilities Placement Standards. The following placement standards by type of antenna shall be complied with notwithstanding the preferred location and type of antenna enumerated in this section:

(a) Facade Mounted Antenna. The placement of a facade mounted antenna shall comply with the following criteria:

(1) The antenna shall be architecturally integrated with its surroundings so that it appears to be an architectural feature of a building or other structure and its nature as a personal wireless service is not readily apparent.

(2) The antenna shall be placed above the pedestrian line-of-sight as viewed from the street or sidewalk that is nearest the antenna and deemed to be most parallel with the portion of the structure on which the antenna is mounted. Pedestrian line-of-sight shall be considered the horizontal view from a point five (5) feet, ten (10) inches above the nearest street or sidewalk.

(3) To the extent possible, the antenna shall be placed on the side of a mechanical building or penthouse located on the roof of the structure.

(4) If it is not possible to comply with (3) above, then the antenna shall be integrated into the design of the building facade.

(5) The antenna shall be of a color that is compatible with the color of the facade on which it is being mounted.

(6) No portion of the antenna shall extend above the mid-point of a pitched or mansard roof.

(b) Rooftop Mounted Antenna. The placement of a rooftop mounted antenna shall comply with the following criteria:

(1) If a parapet exists on the structure on which the antenna is to be placed, the antenna shall be located behind the parapet.

(2) For all rooftop locations, the antenna shall be located to eliminate or minimize to the greatest extent the view of the antenna from the nearest streets that are adjacent to or closest to the parcel on which the antenna's structure is located.

(3) The antenna shall be of a color that minimizes its visual effect.

(4) The antenna(s) is limited to ten (10) feet in height above the highest point of the roof.

(5) If a pole is used to mount antennas, no more than six (6) antenna may be permitted on any one (1) pole.

(c) Specialty Pole Mounted Antenna. The placement of a specialty pole mounted antenna shall comply with the following criteria:

(1) The antenna shall not extend above the pole on which it is located more than one-third (1/3) the vertical length of the existing pole.

(2) When the antenna to be mounted on the specialty pole requires a separate supporting structure that is attached to the specialty pole, to the extent possible, the antenna and supporting structure shall be mounted in such a manner as to represent a visual extension of the existing specialty pole.

(3) The antenna shall be of a color that is the same as the pole on which it is mounted.

(4) No more than six (6) antennas may be mounted on a specialty pole.

(5) The antenna supporting system may not exceed the limitations placed on the horizontal width of the antenna supporting system as provided in this article.

(6) The distance between two (2) specialty poles on which antenna are mounted or proposed to be mounted shall not be closer than one-quarter

(1/4) mile unless the specialty poles are not within a line of sight of each other.

(d) Commercial Signage Mounted Antenna. The placement of a commercial signage mounted pole antenna shall comply with the following criteria:

(1) The antenna shall not extend above the top of the sign on which it is located more than one-third (1/3) the height of the sign face.

(2) The antenna shall be attached to the sign in such a manner as to represent, to the greatest extent possible, an extension of the existing sign, either vertically or horizontally.

(3) The antenna shall be of a color that is the same as the frame of the sign on which it is mounted.

(4) The antenna supporting system may not exceed the limitations placed on the horizontal width of the antenna supporting system as provided in this article.

(5) No more than six (6) antennas may be mounted on a pole.

(e) Monopole Antenna. The placement of a monopole antenna shall comply with the following criteria:

(1) Antennas shall be allowed in all Rural Residential, Public/Semi-Public Facilities (PSP), General Commercial (GC), Neighborhood Commercial/Office (NC), Tourist Commercial (TC), Industrial (I), Parks and Recreation (PR), and Specific Plan (SP) regulatory zones. Antennas may be allowed in Urban Residential and Suburban Residential regulatory zones when the antenna is proven by a technical review to be required to fill a “Significant Gap Coverage” as defined in Section 110.324.55. Antenna shall be limited to the building standard height for an allowed main structure plus up to ten (10) feet above that height.

(2) Antennas shall be permitted in the General Rural (GR) and Open Space (OS) land use designations (see Open Space limitations within this article) with the placement standards depicted in Table 110.324.50.1, Antenna Placement Standards.

(3) An additional twenty-five (25) percent pole height shall be granted if the monopole is a stealth design that may include a slim line pole, a tree or other proposed camouflaged design compatible with the surrounding area. The width of the supporting mechanism for the antenna may increase up to the additional twenty-five (25) percent to the extent that the camouflage conceals the array.

(4) An additional ten (10) feet of height shall be granted when a collocation on an existing monopole is proposed.

(5) To the extent possible, monopole mounted antennas shall be placed in a manner that either natural features, built features or a combination of

both provide a complete background to the antenna and monopole as seen from the nearest roadway or occupied structure.

Table 110.324.50.1

ANTENNA PLACEMENT STANDARDS

Design Standards	Distance from Residential Property						
Distance from Residentially Zoned Property or Public Paved Right of Way (closest adjacent use will be applied)	50’	200’	400’	600’	1,000’	1,500’	2,000’
Permitted Height of Pole	45’	50’	60’	70’	80’	90’	+100’
Supporting Mechanism for Antenna System	2*	2.5*	3*	4*	5*	6*	+7*

Note: * = Specified number times diameter at base of pole equals allowed supporting mechanism for antenna system diameter.

Source: Washoe County Department of Community Development.

(6) If the location of the monopole is in an area where a line of poles presently exists, the monopole and antenna shall be placed, to the extent possible, in line with the pattern of the other poles.

(7) A monopole mounted antenna shall be of a color that blends with the background. Reflective materials are prohibited.

(8) To the extent possible, a monopole shall be designed to replicate existing structures and natural features/vegetation in the immediate vicinity.

(9) Fencing shall be erected around the monopole. In lieu of fencing, the monopole shall be secured with a commercial anti-climb device. The installation of the anti-climb device or security fencing shall assure the facility is protected from climbing by unauthorized persons.

(10) Monopole mounted antennas are restricted from being located in the following locations unless a “significant gap” (see Section 110.324.55) can be demonstrated with a technical review:

(i) Public trails as exist or are proposed on the adopted Regional Open Space Plan and as exist or are proposed on an adopted Washoe County Park District Master Plan and within one thousand (1,000) feet of a public trail as described in this section.

(ii) Floodways as designated on the adopted Washoe County Development Suitability maps.

(iii) Critical and Sensitive Stream Zones as identified in Article 418, Significant Hydrologic Resources.

(iv) Significant ridgelines as designated on the adopted Washoe County Development Suitability maps.

(f) Lattice Towers. Lattice towers may only be located at an established communication site as of January 1, 2004. These sites are commonly known as "McClellan Peak," "Chimney Peak," "Fox Mountain," "Marble Bluff," "Mt. Rose Knob," "Pah Rah Peak," "Peavine Peaks," "Poito Mountain," "Red Peak," "Slide Mountain," and "Virginia Peak."

(1) New communication sites may be added with an amendment to the Development Code upon finding that the new communication site is needed to provide service within Washoe County and no established communication site can provide the required service.

(2) The lattice tower shall be of a color that blends with the background. Reflective materials are prohibited.

(3) The proposed tower may be added upon a showing that the proposed tower is required because the antenna is not able to be located on an existing tower or approved tower within the communications grid established, or to be established, by the communication provider because one of the following apply:

(i) The unwillingness of the owner of an existing tower to agree to collocation or to provide adequate space on the property for the equipment necessary to support additional communication antenna(s).

(ii) The lack of structural capacity for the antenna on an existing tower.

(iii) The new antenna would interfere with existing or other planned equipment on the existing tower.

(iv) Other unforeseen reasons which make it commercially impracticable or technically unfeasible to locate on an existing tower.

(4) Notwithstanding subsections enumerated above, all communication providers shall first attempt to locate antenna arrays upon existing towers and structures, within six hundred (600) feet of the proposed site prior to being approved for a new tower installation. In the event that there is such a tower or structure within the distance of six hundred (600) feet, it will be incumbent upon the communication provider to demonstrate technological hardship which would discourage this cooperative land use.

(5) Towers shall be designed to accommodate more than one (1) antenna array, and towers higher than eighty (80) feet must accommodate at least three (3) antenna arrays.

(6) Fencing shall be erected around the tower. In lieu of fencing, the tower shall be secured with a commercial anti-climb device. The installation of the anti-climb device or security fencing shall assure the facility is protected from climbing by unauthorized persons.

(7) If no permanent staff is assigned to the facility, development standards regarding parking, landscaping and screening are not required.

(8) No signals, lights or signs shall be permitted on towers unless required by the Federal Communications Commission or Federal Aviation Administration.

(g) Equipment Shelters and Cabinets. The placement of equipment shelters and cabinets for all wireless facilities shall comply with the following criteria:

(1) Equipment shelters and cabinets shall be of a color so as to blend with the surrounding natural and built background and siding shall be of natural materials or shall replicate the look of natural materials, including wood, stone, rock or split face block; and

(2) Landscaping requirements for sites shall comply with Section 110.412.40, Civic and Commercial Use Types.

(h) Setbacks. All wireless communication facilities shall be erected in accordance with the setback requirements of the regulatory zone in which they are located (see Table 110.406.05.1, Standards).

(i) Right-of-Way. A specialty pole mounted antenna shall be permitted in the right-of-way provided:

(1) A lease is executed by the responsible public body;

(2) The execution of the lease guarantees that placement will not impair public safety and will not impede other public uses of the right-of-way; and

(3) The facility complies with the provisions of this section.

[Added by Ord. 1004, provisions eff. 1/30/98. Amended by Ord. 1220, provisions eff. 11/7/03. Renamed from "Wireless Communication Facilities Placement Standards" and amended by Ord. 1242, provisions eff. 7/23/04.]

Section 110.324.55 Significant Gap Coverage. A significant gap for purposes of this article shall include a "white area" where no cellular service from any carrier is available. A wireless cellular facility shall be permitted at any location if the applicant can demonstrate by technical studies that:

(a) The facility is for personal wireless service as defined by applicable federal statutes or regulations;

(b) A facility at the site proposed is necessary to close an existing significant gap or gaps in the availability of personal wireless service; and

(c) The facility and the location proposed is, therefore, eligible for the following increase in allowable height of a monopole:

(i) The height of the antenna shall be limited to the building standard height for an allowed main structure plus up to ten (10) feet above that height in any residential regulatory zone; or

(ii) Table 110.324.55.1, Significant Gap Antenna Pole Height, is applied.

Table 110.324.55.1

SIGNIFICANT GAP ANTENNA POLE HEIGHT

Design Standards	Distance from Residential Property						
Distance from Residentially Zoned Property or Public Paved Right of Way (closest adjacent use will be applied)	50'	200'	400'	600'	1,000'	1,500'	2,000'
Permitted Height of Pole	45'	50'	60'	70'	80'	90'	+100'
Bonus Allowed	10'	15'	20'	25'	30'	35'	40'
Total Permitted Height of Pole	55'	65'	80'	95'	110'	125'	140'+

Source: Washoe County Department of Community Development

[Added by Ord. 1242, provisions eff. 7/23/04].

Section 110.324.60 Wireless Communication/Cellular Facilities Permitting Requirements.

(a) Information Required Prior to Issuance of Any Permit. In addition to the requirements of the Building and Safety Department, the following information must be provided to the Department of Community Development before any permit can be issued for the construction and installation of a wireless communication/cellular facility:

(1) Site plan.

(2) If the wireless facility is not within the County's preferences identified in subsections (a) through (c) of Section 110.324.45 (facade mounted, rooftop mounted or collocation on existing facility), a justification as to why these were either not available or not chosen.

(3) Map identifying alternate sites that were considered by the applicant, with a justification by a competent professional for the requested site.

(4) Type of antenna and support structure.

(5) Exact location of antenna and support structure.

(6) Exact location of equipment shelter and/or cabinet.

(7) Height of antenna and horizontal width of supporting mechanism for antenna system.

(8) Whether antenna is being collocated.

(9) Whether antenna and equipment shelter/cabinet is being codeveloped.

(10) Siting and screening of antenna(s) to minimize visual impact.

(11) Copy of the Federal Communications Commission (FCC) license or construction permit.

(12) Color palette.

(13) Certification by a competent professional that the facility complies with Federal Communications Commission regulations for radio frequency emissions and plan for periodic recertification of compliance.

(14) In the case of a request to locate in the public right-of-way, a certification that the facility meets all applicable requirements of Nevada and Washoe County for use of public right-of-way and a copy of the encroachment permit and lease agreement.

(15) A minimum of eight (8) panoramic, true color photographs. The photographs must display the north, south, east and west views of the site and views of the adjacent properties. The Director of Community Development shall determine the final choice of color for the structure from a color palette submitted by the applicant. The color chosen shall blend with the background and surroundings and best meet the intent of this subsection.

(16) Landscape plans.

(17) Property owner's assurance shall be provided which includes a document signed and acknowledged by the property owner, accompanied by a recordation fee in the amount shown on the County Recorder's fee schedule, assuring the removal of the wireless facility should the facility's use be discontinued for twelve (12) months. The document shall include the property owner's permission, under such circumstances, for the County to enter onto the property and remove the facility, if feasible, with the cost thereof to constitute a lien against the property. If such removal is not feasible, the County may obtain a court order requiring the removal.

(b) Administrative Review of Building Permit. Within ten (10) working days of receipt of the building permit, the Director of Community Development or his/her authorized representative shall review the building permit to determine whether it is in full compliance with the standards as enumerated in this article.

[Added by Ord. 1004, provisions eff. 1/30/98. Amended by Ord. 1220, provisions eff. 11/7/03. Renamed from "Wireless Communication Facilities Permitting Requirements" and amended by Ord. 1242, provisions eff. 7/23/04; amended by Ord. 1432, provisions eff. 2/19/10.]

Section 110.324.65 Denial Requirements. If upon review by the Director of Community Development or his/her authorized representative to permit construction of a facility for personal wireless service is denied, the Director of Community Development or his/her authorized representative shall provide to the applicant a written explanation that identifies each procedure and standard that the applicant, application or facility for personal wireless service failed to meet. Further, the decision shall describe the documents relied upon by the Director of Community Development or his/her authorized representative in making the decision.

[Added by Ord. 1242, provisions eff. 7/23/04.

Section 110.324.70 Appeals. An action of the Director of Community Development or his/her authorized representative made pursuant to this article may be appealed in accordance with the provisions of this section.

(a) Appeal Period. An appeal of the decision by the Director of Community Development or his/her authorized representative may be made to the Board of County Commissioners within ten (10) days after the date of the mailing of the public notice of the final decision. If filed, an appeal stays any further action on the permit until final resolution of the appeal. If the end of the appeal period falls on a non-business day, the appeal period shall be extended to include the next business day.

(b) Who Can Appeal.

(1) Appeals may be filed by the applicant or the applicant's authorized agent.

(2) Appeals may be filed by an aggrieved party based on the decision in fact of the Director of Community Development. The decision in fact for the approval or denial of a wireless cellular facility shall be published for a minimum of ten (10) working days prior to the issuance of a building permit on the Community Development website to provide the opportunity for residents to be aware of the decision and appeal in accordance with this section.

(c) Contents of Appeal. An appeal shall be filed with the Director of Community Development, accompanied by the required filing fee. The appeal shall be in writing and state the basis of the appeal by citing specifically the inadequacy of the administrative decision. Such reasons shall be based upon the application and the standards established pursuant to this section. Failure of the appellant to present such reasons shall be deemed cause for denial of the appeal.

(d) Time Period for Hearing. The Clerk of the Board of County Commissioners shall schedule a public hearing on the appeal of the administrative staff's final decision before the Board of County Commissioners within sixty (60) days of the date of the filing of the appeal with the Director of Community Development.

(e) Notice of Hearing.

(1) A notice setting forth the date, time and place of the public hearing shall be published in a newspaper of general circulation in Washoe County not less than ten (10) days prior to the public hearing date.

(2) A notice setting forth the date, time and place shall be sent either by mail or, if requested, by electronic means, if receipt of such an electronic notice can be verified, to each member of the affected Citizen Advisory Board not less than ten (10) days prior to the hearing date. The notice shall describe the appeal and other pertinent information in such a manner that the appeal can be clearly identified.

(f) Action by the Board of County Commissioners. The Board of County Commissioners shall consider only those items cited in the appeal. In its deliberation, it may use the appeal and any additional evidence relative to the application and may confirm, reverse or modify the appealed actions based upon

its interpretation of the standards pursuant to this article and the evidence submitted. The action of the Board of County Commissioners shall be by an affirmative vote of a majority of the entire membership of the Board. A final decision by the Board of County Commissioners shall be rendered within sixty (60) days of the appeal hearing. In the case of a tie vote due to the absence of a member, the appeal shall be continued to a future meeting unless requested otherwise by the appellant. Said future meeting may be beyond the sixty (60) days required for a final decision. The final decision of the Board of County Commissioners shall be final for purposes of judicial review.

(g) Effective Date. The decision of the Board of County Commissioners on an appeal of the administrative staff decision shall be effective immediately.

[Added by Ord. 1242, provisions eff. 7/23/04.

Section 110.324.75 Special Use Permit Required: Findings. Subsequent to review under Sections 110.324.40 through 110.324.70, monopole antennas and lattice towers shall require the issuance of a special use permit under the process enumerated in Article 810, Special Use Permits, subject to the findings enumerated below.

(a) That the communications facility meets all the standards of Sections 110.324.40 through 110.324.60 as determined by the Director of Community Development and/or his/her authorized representative;

(b) That public input was considered during the public hearing review process; and

(c) That the monopole or lattice tower will not unduly impact the adjacent neighborhoods or the vistas and ridgelines of the County.

[Added by Ord. 1242, provisions eff. 7/23/04, amended by Ord. 1378, provisions eff. 8/1/08.

Section 110.324.80 Assessment for Actual Costs Incurred. If the Director of Community Development, his/her authorized representative, or the Board of County Commissioners must retain a technical expert to evaluate justifications or technical information submitted by an applicant under this article, the Director of Community Development shall be authorized to assess the applicant for the actual costs incurred in retaining such expert. The costs shall be reimbursed to the County prior to issuance of the decision of the Director of Community Development or his/her authorized representative, or in the case of the applicant's appeal to the Board of County Commissioners, prior to the issuance of a building permit.

[Added by Ord. 1242, provisions eff. 7/23/04.

[Article 324 entitled "Antennas" renamed to "Communication Facilities" by Ord. 1004, provisions eff. 1/30/98.]

[Section 110.324.10 entitled "Satellite Dish Antennas: General" amended by Ord. 875, provisions eff. 8/3/93; renumbered from 110.324.05 and amended by Ord. 890, provisions eff. 11/29/93; and repealed by Ord. 1242, provisions eff. 7/23/04.]

[Section 110.324.55 entitled "Wireless Communication Facilities: Setbacks" added by Ord. 1004, provisions eff. 1/30/98, and repealed by Ord. 1242, provisions eff. 7/23/04.]

[Section 110.324.85 entitled "Variances" repealed by Ord. 1378, provisions eff. 8/1/08.]

Article 326
WIND MACHINES

[This Article amended in its entirety by Ord. 1443, provisions eff. 7/26/10.]

Sections:

110.326.00	**Purpose**
110.326.05	**Applicability**
110.326.08	**Definitions**
110.326.10	**Information Requirements**
110.326.15	**Setbacks and Height**
110.326.20	**Tower and Facility Access**
110.326.25	**Rotor Safety**
110.326.30	**Electromagnetic Interference**
110.326.35	**Utility Notification**
110.326.40	**Noise**
110.326.45	**Roads**
110.326.50	**Aesthetics and Maintenance**
110.326.55	**Signs**
110.326.60	**Wildlife Impact**
110.326.65	**Lighting**
110.326.70	**Shadow Flicker**
110.326.75	**Ice Throw**
110.326.80	**Waiver of Parking and Landscaping Regulations**
110.326.85	**Roof Mounted Private Wind Machines**
110.326.90	**Repair and Removal of Wind Machines**
110.326.100	**Meteorological Towers**
110.326.105	**Compliance with Regulations**

Section 110.326.00 Purpose. The purpose of this article, Article 326, Wind Machines, is to regulate wind machines used for residential and commercial production of electricity.

Section 110.326.05 Applicability.

(a) Private Wind Machines. A private wind machine consists of a wind turbine, tower, and associated control or conversion electronics for the purpose of providing electrical power to a lawful principal use. A wind machine having a rated capacity of 100 kilowatts (kW) or less shall be considered a private wind machine for the purposes of these regulations. Not more than one (1) wind machine shall be allowed per parcel of land when the size of the parcel is less than one (1) acre in size. Any wind machine or combination of wind machines having a rated capacity greater than twenty-five (25) kW up to one-hundred (100) kW on a parcel, or any wind machine that is greater than seventy-five (75) feet in height if located on a lot of five (5) acres or smaller, or any wind machine that is greater than one-hundred (100) feet in height if located on a lot over five (5) acres, shall be required to obtain a special use permit from the Washoe County Board of Adjustment. Private wind machines are considered accessory uses as

stated in Article 306, Accessory Uses, and are allowed in those land use designations specified in Article 302, Allowed Uses.

(b) Commercial Wind Machines. Wind machines that have a rated capacity of more than one-hundred (100) kW shall be considered commercial wind machines for the purposes of these regulations. Commercial wind machines may be grouped together into a wind energy facility consisting of one or more wind machines and other structures and buildings, including substations, electrical infrastructure, and other appurtenant structures and facilities. Commercial wind machines are considered a principal use on a parcel of land and are allowed in those land use regulatory zones specified in Article 302, Allowed Uses.

Section 110.326.08 Definitions.

A-Weighted Sound Pressure Level (dBA). "A-Weighted Sound Pressure Level (dBA)" is defined as the sound pressure level in decibels as measured on a sound level meter using the A-weighted filter network. The A-weighted filter de-emphasizes the very low and very high frequency components of the sound in a manner similar to the frequency response of the human ear and correlates well with subjective reactions to noise.

Ambient Noise. "Ambient Noise" is defined as the composite of noise from all sources near and far. The normal or existing level of environmental noise at a given location.

Interference or Degradation. "Interference or Degradation" shall mean a significant and measureable reduction in the ability to communicate or receive data which cannot be mitigated by other means by the group interfered with by the wind machine.

Meteorological Towers. "Meteorological Towers" are those towers which are erected primarily to measure wind speed and directions plus other data relevant to siting wind machines, and include the tower, guy cables and hardware, anemometers, wind direction vanes, booms to hold equipment, data logger, instrument wiring, and telemetry devices that are used to monitor or transmit wind speed and wind flow characteristics over a period of time for either instantaneous wind information or to characterize the wind resource at a given location. Meteorological towers under this section do not include towers and equipment used by airports, Nevada Department of Transportation (NDOT), or similar applications to monitor weather conditions; such towers are exempt from the provisions of this article.

Public Roads. "Public Roads" are defined as roadways that are owned and/or maintained by the county, the state, or a local general improvement district (GID).

Shadow Flicker. "Shadow Flicker" is defined as alternating changes in light intensity caused by the moving blade casting shadows on stationary objects (Receptor), such as a residential dwelling which exceeds ten (10) hours a year. The dissipation of shadow intensity over the distance from a wind machine limits the classification of shadow flicker to ten (10) rotor diameters or three-thousand (3,000) feet, whichever is greater.

Site Restoration. "Site Restoration" of a commercial wind energy facility shall mean the removal of all wind machines and all ancillary structures and equipment, excluding the wind machine foundations, and regrading and revegetation of all disturbed area.

Trail Easements. "Trail Easements" are defined as a Washoe County recorded easement for pedestrian, equestrian, bicycle or other similar public access uses.

LeqA. "LeqA" is defined as the equivalent or energy-averaged noise level.

Lmax. "Lmax" is defined as the highest root-mean-square (RMS) noise level measured over a given period of time.

L50. "L50" is defined as the noise level exceeded fifty percent (50%) of the time during a given period of time.

Section 110.326.10 Information Requirements. All permit applications for commercial wind machines shall include the information listed in this section in addition to that normally required by other articles in the Development Code. The applicant may appeal to the Director of Community Development for the consideration of waiving certain submittal requirements of this article in cases where the wind machine(s) are not used for power sales and are constructed to offset power demands on site.

(a) Site Plan(s). A scaled site plan showing the following information:

(1) Existing topography, trees and drainage channels;

(2) Direction of prevailing winds across the project site;

(3) Location of all existing structures within one mile of the proposed wind machine sites;

(4) Location and height above ground of all proposed wind machines and, existing and proposed above-ground utility lines;

(5) Location, height and direction of all radar and microwave stations that could be affected; and

(6) Preliminary dimensions, grading and alignment for all temporary and permanent road, power transmission and distribution line easements, structures, wind machine sites, substation(s), staging areas and other site work.

(b) Distances to all dwellings, churches, schools, nursing homes, roads, access easements, trails, public and private airports and airstrips, parks, wetlands, and listed historic sites identified by the State Historic Preservation Office (SHPO) within one (1) mile; and important bird and wildlife areas as identified in federal, state, and university databases, or other generally available documentation;

(c) Standard drawings and photographs of the wind turbine structure, including the tower, base, turbine and blades;

(d) A GIS map(s) and visual simulations, showing the impact of the topography upon visibility of the project from other locations, to a radius that shall be approved by the Washoe County Department of Community Development. The base map used shall be a published topographic map showing non-natural features, such as roads, towers, and buildings;

(e) A regrading and revegetation program for temporary roads no longer needed after project construction;

(f) A preliminary drainage, sediment collection and erosion control plan for all areas proposed to be disturbed on the parcel(s); and

(g) Decommissioning plans prepared in conformance with Section 110.326.90(b), Removal of Wind Machines, below.

(h) Provide location of all public and private airports within ten (10) miles of the nearest proposed wind turbine.

(i) A current determination letter resulting from a Federal Aviation Administration (FAA) Form 7460-1, Notice of Proposed Construction or Alteration, for each proposed wind machine or tower.

(j) A summary of the status of all FAA determinations with details on how any unresolved problems with aircraft safety are being addressed as well as a detailed description of any obstruction marking and lighting that will be required by the FAA.

Section 110.326.15 Setbacks and Height.

(a) Setbacks from Adjacent Parcels – Private Wind Machines. Notwithstanding Section 110.402.10, Heights: Special Exceptions, of the Development Code, minimum setback for a private wind machine shall be:

(1) All private wind machines shall be erected in accordance with the setback requirements of the regulatory zone in which they are located (see Table 110.406.05.1, Standards). Additionally, all private wind machines shall maintain a minimum setback of one (1) times the overall machine height including the uppermost extension of any blades, from any public roads and highways, railroads, trail easements, aboveground utility lines, and any existing residence on an adjoining property.

(2) Private wind machines shall be allowed closer to a property line within any land use designation if the abutting property owner(s) grants written approval of the proposed setback. The written consent shall be signed and notarized by the owner of record of the adjoining property and shall detail the setback distance and the size and height of the proposed private wind machine. The written consent shall be recorded with the Washoe County Recorder, a conformed copy of which shall be submitted with the building permit application to construct the wind machine.

(3) Guy wire anchors may not extend closer than five (5) feet from any property line and shall be made clearly visible to a minimum height of six (6) feet.

(4) Private wind machines shall not be located within the front yard setback of any parcel of land nor within the front yard setback facing a street on a corner parcel of land.

(b) Setbacks from Adjacent Parcels – Commercial Wind Machines. A minimum setback for each commercial wind machine is identified below. These setbacks may be reduced with the written consent of the owner(s) of the adjoining property(s):

(1) Three (3) times the overall machine height, including the uppermost extension of any blades, from the property line of any nonparticipating

residentially zoned property including any property within the General Rural Agricultural (GRA) Regulatory Zone.

(2) One (1) times the overall machine height, including the uppermost extension of any blades, from railroads; trail easements; aboveground utility lines; and public roads which are maintained by the county, state or a local GID.

(3) One (1) times the overall machine height, including the uppermost extension of any blades, from the property line of any privately owned non-residentially zoned properties.

(4) Thirty (30) feet from any undeveloped federally owned property unless greater setbacks are requested by that affected federal agency.

(5) One (1) mile from any existing off-site dwelling(s) or other occupied buildings within Washoe County.

(c) Height Restrictions – Commercial Wind Machines. The overall height of Commercial wind machines, including the uppermost extension of any blades, shall not exceed six-hundred (600) feet.

[This Article amended in its entirety by Ord. 1443, provisions eff. 7/26/10 Amended by Ord. 1475, provisions eff. 1/12/12.]

Section 110.326.20 Tower and Facility Access. All wind machine towers must comply with the following provisions:

(a) The tower shall be designed and installed so that there shall be no exterior step, bolts, or a ladder on the tower readily accessible to the public for a minimum height of twelve (12) feet above the ground. For lattice or guyed towers, sheets of metal or wood or other barrier shall be fastened to the bottom tower section such that it cannot readily be climbed. Any guy wires shall be made clearly visible to a minimum height of six (6) feet; and

(b) All ground-mounted electrical and control equipment shall be labeled and secured to prevent unauthorized access.

Section 110.326.25 Rotor Safety. Each wind machine shall be equipped with both manual and automatic controls to limit the rotational speed of the blade within the design limits of the rotor. The minimum distance between the ground and any protruding blades utilized on a private wind machine shall be fifteen (15) feet as measured at the lowest point of the arc of the blades.

Section 110.326.30 Electromagnetic Interference. To avoid interference, the owner(s) of any radar facility, television, radio, licensed Ham radio station, cellular telephone or microwave reception facility within a radius of five (5) miles from any commercial wind machine shall be notified in writing no less than forty-five (45) days prior to any public hearing, of a proposed project and shall be provided an opportunity to assess and determine any detrimental impact(s) on the operation of their facility. If degradation of television, radio, cellular telephone, radar microwave or licensed Ham radio reception occurs as the result of the wind machine and confirmation that the wind machine is the source of the interference, the owner/developer of the wind machine shall pay all reasonable costs to correct the television, radio, cellular telephone or microwave reception within thirty (30) days of notification by Washoe County that a problem exists.

Section 110.326.35 Utility Notification. No wind machine that is to be connected to electric utility equipment of any utility grid shall be operated until a net metering agreement or interconnection agreement has been made with the affected electric utility company(ies), and the utility company or companies have approved the proposed method of interconnection. Off-grid systems shall be exempt from this requirement.

Section 110.326.40 Noise.

(a) Commercial Wind Machine Noise Standards

(1) Noise Studies.

(i) As part of the application submittal for a commercial wind machine, the applicant shall provide modeling and analysis that will confirm that the facility will not exceed the maximum permitted noise levels.

(ii) A post-construction noise study shall be conducted within six (6) months of the date when the project is fully operational. The post-construction measurements will be reported to the Washoe County Department of Community Development using the same format as used for the pre-construction sound studies. As with the pre-construction study, the post-construction study shall be conducted by an Independent Qualified Acoustical Consultant approved by the Washoe County Department of Community Development, but paid for by the applicant/owner/developer of the wind project. The post-construction noise study shall be performed according to the procedures in the most current version of American National Standards Institute (ANSI) S12.18. All noise levels shall be measured with a sound meter that meets or exceeds the most current version of ANSI S1.4 specifications for a Type I sound meter. Any post-construction noise levels that exceed any of the limits set forth in item (ii) of this section will constitute proof that the wind machine(s) is non-compliant and must be rectified or shut down immediately.

(iii) Noise studies shall not be required in the event that the placement of a wind turbine is located more than two (2) miles from any existing residence.

(2) Audible Noise Limit. No wind machine shall be located so as to generate post-construction sound levels that exceed forty-five (45) dBA at night or fifty (50) dBA during the day as measured a minimum distance of fifty (50) feet from any existing residence within one (1.0) mile from a wind machine. The appropriate value to use for the post-construction sound level is LeqA.

(3) Noise Setbacks. Setbacks greater than those set forth in Section 110.326.15, Setbacks and Heights, shall be imposed if necessary to meet the noise level requirements of this section.

(b) Private Wind Machine Noise Standards. No wind machine shall create noise that exceeds a maximum of fifty-five (55) dBA at any property line abutting a residential regulatory zone or sixty (60) dBA at any other property line.

Measurement of sound levels shall not be adjusted for, or averaged with, non-operating periods.

Section 110.326.45 Roads. Construction of roads for the installation and operation of wind machines shall be minimized. Existing roads in the area of the proposed wind machines shall be used to the maximum extent possible. Temporary roads used for initial installation shall be regraded and revegetated to a natural condition upon completion of construction of the wind machines.

Section 110.326.50 Aesthetics and Maintenance.

(a) Appearance. Wind machines shall, subject to any applicable standards of the Federal Aviation Administration (FAA), be of a non-reflective, non-obtrusive color: off-white, white, light silver, tan, gray, or sand are permitted. The painting or coating shall be kept in good repair for the life of the wind machine.

(b) Maintenance. Wind machines shall be maintained in good repair, as recommended by the manufacturer's scheduled maintenance or industrial standards, and shall be free from rust.

(c) Lubricants and Cooling Fluids. Waste or used lubricants and cooling fluids shall be properly and safely removed in a timely manner from the site(s) of any commercial wind facility and shall not be allowed to accumulate.

Section 110.326.55 Signs.

(a) Warning Signs. Signs warning of high voltage electricity or electric shock hazard shall be posted on stationary portions of each wind machine.

(b) Advertising Signs. The only advertising sign allowed on a wind machine shall be a logo on the generator housing. Logos on commercial wind machines shall not exceed eight square feet in size.

(c) Project Signs for Commercial Wind Machines. Each commercial wind machine shall have posted on the site in a visible, easily accessible location, two signs having no more than four (4) square feet in area, displaying a current address and telephone number for emergency calls. The emergency telephone number shall allow a caller to contact a responsible individual to address emergencies at any time during or after regular business hours and on weekends or holidays. One sign shall be located at the service drive entrance to the site.

Section 110.326.60 Wildlife Impact.

(a) Prior to approval of a building permit, the applicant for any commercial wind machine shall prepare and submit for review to the Nevada Department of Wildlife and the Washoe County Department of Community Development, a report that discusses the year-round use of the proposed project site by wildlife, and shall identify any anticipated impacts that may negatively affect wildlife or their habitat, and shall suggest mitigation measures that will compensate for any negative effects. The report shall be prepared by a qualified biologist familiar with the local wildlife species.

(b) Prior to the operation of any commercial wind machine, the applicant shall prepare and submit for review to the Nevada Department of Wildlife and the

Washoe County Department of Community Development a post-construction monitoring plan to investigate and document wildlife injury and mortality resulting from operation of the proposed project. The plan shall identify the methods used, which are expected to be consistent with current scientific practices. Post construction monitoring shall be performed by an independent third party contractor familiar with the methodology and procedures for conducting mortality studies and dead bird searches.

(c) Where a project is subject to the National Environmental Protection Act (NEPA), such as projects located on federal lands, Washoe County will act as a cooperating agency, and will accept the requirements of the Environmental Assessment or Environmental Impact Statement as meeting Washoe County requirements for this section (110.326.60).

Section 110.326.65 Lighting. Wind machine towers shall not be artificially lighted unless required, in writing, by the Federal Aviation Administration (FAA) or other applicable authority that regulates air safety. Where the FAA requires lighting, the lighting shall be the lowest intensity allowable under FAA regulations; the fixtures shall be shielded and directed to the greatest extent possible to minimize glare and visibility from the ground; and no strobe lighting shall be permitted, unless expressly required by the FAA.

Section 110.326.70 Shadow Flicker. Wind machines shall be sited in such a manner to minimize shadow flicker on a roadway and on residences located off the property on which the wind machine is constructed. It shall be the responsibility of the owner/developer to modify operations to restrict shadow flicker on existing dwellings and/or existing occupied buildings. If necessary to minimize shadow flicker from crossing occupied structures, the wind machine may be required to be programmed to stop rotating during the time the wind machine shadow crosses these structures. Alternatively, the wind machine owner/operator may obtain a written easement or other written agreement that specifically allows shadow flicker to cross an occupied structure. This easement or agreement shall be recorded with the Washoe County Recorder, a conformed copy of which shall be submitted with the building permit application.

Section 110.326.75 Ice Throw. The potential ice throw or ice shedding from the proposed wind machine shall not cross the property lines of the site to strike adjacent residences or accessory buildings, nor impinge on any public right-of-way or access easement.

Section 110.326.80 Waiver of Parking and Landscaping Regulations. For commercial wind machines, the following requirements are waived:

(a) Landscaping requirements, as contained in Article 412, Landscaping, of the Development Code, are hereby waived for the wind machines, transmission lines and all related electrical works. Landscaping for any maintenance building, control building or substation located more than one mile from any public local, collector, arterial road or highway, shall also be exempt from landscaping requirements.

(b) Hard surface parking requirements as contained in Article 410, Parking and Loading, of the Development Code, are hereby waived for the wind machines sites, transmission lines, substations and all related electrical works. Instead, a parking surface consisting of decomposed granite or other material approved by the Engineering Division shall be used for the parking surface. The width of the required parking areas shall be approved by the Washoe County Department of Community Development and the Washoe County Engineering Division. The

parking surface and parking construction requirements shall be determined by the Washoe County Engineering Division.

Section 110.326.85 Roof Mounted Private Wind Machines. Roof mounted wind machines shall be located so that in the event of failure, no part of the machine will fall across any parcel line and onto any adjacent building. Attachment of the wind machine to the building shall be in strict compliance with regulations of the Washoe County Department of Building and Safety.

Section 110.326.90 Repair and Removal of Wind Machines. Any wind machine found to be unsafe by an official of the Washoe County Department of Building and Safety shall be repaired by the owner to meet federal, state, and local safety standards, or, if not repaired, shall be removed in accordance with the provisions of this article within six (6) months of being notified by the Department of Building and Safety of the existence of an unsafe condition. Wind machines that are not operated for a continuous period of twelve (12) months shall be removed by the owner of the wind machine.

(a) For commercial wind machines, the applicant/developer shall submit a decommissioning plan at the time of application for a special use permit. The plan shall include:

(1) The anticipated life of the project,

(2) The estimated decommissioning costs net of salvage value in current dollars,

(3) The method of ensuring that funds will be available for decommissioning and restoration, and

(4) The anticipated manner in which the project will be decommissioned and the site restored.

(b) When a wind machine is removed from a site, all associated and ancillary equipment, batteries, devices, structures or support(s) for that system shall also be removed. For the purposes of this section, non-operation shall be deemed to include, but shall not be limited to, the blades of the wind machine remaining stationary so that wind resources are not being converted into electric or mechanical energy, or the wind machine is no longer connected to the public utility electricity system.

(c) In the event a commercial wind machine owner fails to remove the wind machine tower and all associated and ancillary equipment, batteries, devices, structures or support(s) for that system, as required in this section, Washoe County shall have the authority to remove or authorize the removal of the tower and all associated elements of the project. If the performance security is not sufficient to cover the cost of the removal, additional costs associated with the removal shall be assigned as a lien on the personal property of the wind machine owner in question. If the performance security has expired or is not available, the County shall have the authority to have the tower removed and associated costs assigned as a lien on the personal property of the wind machine owner in question.

Section 110.326.100 Meteorological Towers. All meteorological towers provided for under this section shall comply with the following standards:

(a) A temporary meteorological tower used to site wind machines shall be permitted under the same setback and access standards and requirements that apply to Private Wind Machines. No administrative or special use permit shall be required. Setbacks to property lines shall be equal to the height of the tower.

(b) A permit for all temporary meteorological towers shall be valid for a maximum of five (5) years. Towers shall be removed within one (1) month after the five (5) year-year period has ended. Failure to remove the tower within the one (1) month period may result in a lean being place against the property for the entire cost to Washoe County to remove and dispose of it; salvage value, if any, shall not be deducted from this amount. An extension of time of one (1) year may be permitted by the Director of the Department of Community Development upon submittal of a letter explaining the need for the extension.

(c) A permit for a permanent, non-exempt meteorological tower shall require a special use permit from the Board of Adjustment as provided for under Article 810, Special Use Permits, of the Washoe County Development Code.

(d) All meteorological towers shall comply with applicable requirements of the Federal Aviation Administration. Lighting, signage, aesthetics and maintenance shall comply with the requirements of this article.

(e) Guy wires shall not extend closer than five (5) feet of a property line. Red navigation marker balls or other acceptable marker devices such as flags, reflectors, or bright colored coils shall be installed and maintained on guy wires that support a tower above seventy (70) feet in height to mitigate potential hazards to aviation and to birds and bats.

(f) Meteorological towers shall not be climbable for a minimum of twelve (12) feet above the ground, and shall be surrounded by a six (6) foot fence when not enclosed within fencing constructed for a residence.

Section 110.326.105 Compliance with Regulations. The audible noise limit, shadow flicker, maintenance, and ice throw standards are absolute; no variances to these standards may be given. Once wind machines are permitted, the owners have the option of compliance with these standards or discontinuation of operations. If the affected neighboring property owner does not allow such measurements to commence on their property it shall be deemed that the standard is being met. If the operation of the wind machine(s) does not comply with the provisions of this article, the operator shall promptly take all measures necessary to comply with these regulations, including, but not limited to, discontinued operation of one or more wind machines until compliance has been achieved.

Article 328
GEOTHERMAL RESOURCES

Sections:

110.328.00	**Purpose**
110.328.05	**Applicability**
110.328.10	**Required Permits**
110.328.15	**Geothermal Gradient and Exploration/Development Test Wells**
110.328.20	**Geothermal Wellfield Gathering Systems and Power Generation Facilities**
110.328.25	**Geothermal Direct Use Wells**

Section 110.328.00 Purpose. The purpose of this article, Article 328, Geothermal Resources, is to manage the exploration, development and use of geothermal resources pursuant to the provisions set forth by NRS 534A.

Section 110.328.05 Applicability. The provisions of this article shall apply to all geothermal projects within the unincorporated areas of the County. All geothermal development for commercial, industrial, residential and private domestic uses shall require an administrative permit pursuant to Article 808, Administrative Permits, unless otherwise specified in the provisions of this article. A geothermal development project consists of all wells, access roads, surface equipment, facilities, pipelines and electric transmission lines on one parcel or two or more contiguous parcels.

Section 110.328.10 Required Permits. All geothermal development shall be required to obtain all necessary permits from the Nevada Department of Minerals, the Nevada Division of Environmental Protection, the Nevada Division of Water Resources, the Washoe County District Health Department and, if the geothermal development is located on any federal lands, the U.S. Bureau of Land Management or U.S. Forest Service prior to the issuance of any building permits for the project.

Section 110.328.15 Geothermal Gradient and Exploration/Development Test Wells. The provisions of this section shall apply to the location and development of geothermal temperature gradient and exploration/development test wells.

(a) Fluid or Steam Production. No fluid or steam shall be used for energy production from the geothermal temperature gradient and exploration/ development test well(s).

(b) Drilling Materials. No toxic materials, such as chromate, shall be used in the drilling fluid.

(c) Proximity to Water Wells. Geothermal temperature gradient and exploration/ development test wells shall be situated with a minimum separation of five hundred (500) feet from any adjacent private domestic well(s) or state permitted municipal and industrial or quasi-municipal and industrial purpose well(s) unless a monitoring well is required by another permitting agency.

(d) Reclamation of Site. Upon abandonment, in accordance with the Nevada Department of Mineral requirements, the temperature gradient and exploration/development well pad site shall be revegetated and returned to approximately its original condition. In Washoe County designated scenic corridor areas, any access road constructed to serve the site(s) and thereafter abandoned shall be revegetated and returned to approximately its original condition.

(e) Special Use Permit Requirements. All geothermal temperature gradient and exploration/development well projects within five hundred (500) feet of an adjacent parcel with an occupied dwelling unit shall require a special use permit pursuant to Article 810, Special Use Permits, instead of an administrative permit pursuant to Article 808, Administrative Permits.

Section 110.328.20 Geothermal Wellfield Gathering Systems and Power Generation Facilities. The provisions of this section shall apply to geothermal wellfield gathering systems and related power generation facilities. This includes the use of fluid or steam for energy production from any geothermal well(s).

(a) Siting of Geothermal Wellfield Gathering Systems and Power Generation Facilities. Geothermal wellfield gathering systems and related power generation facilities shall be sited in areas designated as either Industrial or General Rural on the Washoe County Regulatory Zone map(s). If necessary, a Master Plan and/or Regulatory Zone map amendment will be requested and obtained prior to any permits for the geothermal wellfield gathering system being issued.

(b) Drilling Materials. No toxic materials, such as chromate, shall be used in the drilling fluid.

(c) Proximity to Water Wells. Geothermal wellfield gathering system wells shall be situated with a minimum separation of five hundred (500) feet from any adjacent private domestic well(s) or state permitted municipal and industrial or quasi-municipal and industrial purpose well(s) unless a monitoring well is required by another permitting agency.

(d) Reclamation of Site. Upon abandonment, in accordance with the Nevada Department of Mineral requirements, a geothermal wellfield gathering system site shall be revegetated and returned to approximately its original condition. In Washoe County designated scenic corridor areas, any access road constructed to serve the site(s) and thereafter abandoned shall be revegetated and returned to approximately its original condition.

(e) Minimum Standards. A geothermal wellfield gathering system and all related surface structures for power generation will satisfy the following minimum standards:

(1) Visual Appearance. Placement of facilities on peaks, ridgelines, bluffs and other prominent topographic features as viewed from the property line of the parcel shall be avoided in order to minimize the impact on the visual character of the site.

(2) Height Limits. All facilities shall comply with the Industrial Regulatory Zone height standards as per Table 110.406.05.1, Standards.

(3) Landscaping and Screening. Landscaping and/or opaque screening with a minimum height of six (6) feet shall be placed around the immediate perimeter of all power generation equipment pursuant to Article 412, Landscaping. Landscaping and/or opaque screening with a minimum height of six (6) feet shall also be required on all property boundaries that are immediately adjacent to public rights-of-way and any immediately adjacent residential developments pursuant to Article 412.

(4) Noise. All geothermal wellfield gathering system wells and power generation equipment shall not emit noise levels in excess of sixty-five (65) dba as measured at the property line. Acoustical shielding shall be required for all wellheads and equipment to comply with this standard.

(5) Air Quality. All geothermal wellfield gathering system wells and power generation equipment shall not violate federal, state and Washoe County District Health Department air quality standards.

(f) Special Use Permit Requirements. All geothermal wellfield gathering systems and power generating facilities require a special use permit pursuant to Article 810, Special Use Permits, instead of an administrative permit pursuant to Article 808, Administrative Permits.

[Amended by Ord. 1447, provisions eff. 9/9/10.]

Section 110.328.25 Geothermal Direct Use Wells. The provisions of this section shall apply to the location and development of geothermal direct use wells for domestic, residential, commercial or industrial space heating and food dehydration applications, and all related wellfield gathering systems.

(a) Drilling Materials. No toxic materials, such as chromate, shall be used in the drilling fluid.

(b) Processing of Project. Geothermal direct use facilities proposed in conjunction with a project requiring a special use permit or development approval (e.g. parcel map, subdivision map, development agreements, projects of regional significance, etc.) shall be processed with the larger project.

(c) Proximity to Water Wells. Geothermal direct use wells shall be situated with a minimum separation of five hundred (500) feet from any adjacent private domestic well(s) or state permitted municipal and industrial or quasi-municipal and industrial purpose well(s) unless a monitoring well is required by another permitting agency.

(d) Reclamation of Site. Upon abandonment, in accordance with the Nevada Department of Mineral requirements, a geothermal direct use well pad site shall be revegetated and returned to approximately its original condition. In Washoe County designated scenic corridor areas, any access road constructed to serve the site(s) and thereafter abandoned shall be revegetated and returned to approximately its original condition.

(e) Minimum Standards. A geothermal direct use well and all related heat transfer structures will satisfy the following minimum standards:

(1) Visual Appearance. Placement of facilities on peaks, ridgelines, bluffs and other prominent topographic features as viewed from the property line of the parcel shall be avoided in order to minimize the impact on the visual character of the site.

(2) Height Limits. All facilities shall comply with the Industrial Regulatory Zone height standards as per Table 110.406.05.1, Standards.

(3) Landscaping and Screening. Landscaping and/or opaque screening with a minimum height of six (6) feet shall be placed around the immediate perimeter of all geothermal direct use wells and all related heat transfer structures pursuant to Article 412, Landscaping. Landscaping and/or opaque screening with a minimum height of six (6) feet shall also be required on all property boundaries that are immediately adjacent to public rights-of-way and any immediately adjacent residential developments pursuant to Article 412.

(4) Noise. All geothermal direct use wells and all related heat transfer structures shall not emit noise levels in excess of sixty-five (65) dba as measured at the property line. Acoustical shielding shall be required for all wellheads and equipment to comply with this standard.

(5) Air Quality. All geothermal direct use wells and all related heat transfer structures shall not violate federal, state and Washoe County District Health Department air quality standards.

(f) Special Use Permit Requirements. Geothermal direct use wells and all related heat transfer structures within five hundred (500) feet of an adjacent parcel with an occupied dwelling unit require a special use permit pursuant to Article 810, Special Use Permits, instead of an administrative permit pursuant to Article 808, Administrative Permits.

Article 330
DOMESTIC PETS AND LIVESTOCK

Sections:

110.330.00	**Purpose**
110.330.05	**Applicability**
110.330.10	**Keeping of Animals**
110.330.15	**Poultry and Rabbits**
110.330.20	**Livestock**
110.330.25	**Dogs and Cats**
110.330.30	**Birds**
110.330.35	**Miniature Pigs**
110.330.40	**Exotic Animals**
110.330.45	**4H and Future Farmers of America Livestock Projects**
110.330.50	**Dog Training Services**
110.330.55	**Agricultural Buildings**

Section 110.330.00 Purpose. The purpose of this article, Article 330, Domestic Pets and Livestock, is to provide the number of permitted animals, standards and conditions for regulating domestic pets and livestock in Washoe County.

[Added by Ord. 1238, provisions eff. 6/4/04.]

Section 110.330.05 Applicability. Domestic pets, livestock and fowl kept for non-commercial private enjoyment and use are subject to the provisions set forth in this article along with structures used to support their shelter and maintenance. Animals kept for commercial or agricultural uses are regulated by Article 304, Use Classification System.

[Added by Ord. 1238, provisions eff. 6/4/04.]

Section 110.330.10 Keeping of Animals. All animals must be kept in compliance with this article, including all provisions of Washoe County Code Chapter 55, Animals and Fowl; all Washoe County Health Department regulations including Regulations for Solid Waste Management; and Nevada Revised Statutes 574, Cruelty to Animals. Animals kept for private, non-commercial use under a non-conforming status in development existing on or before August 3, 1993 must adhere to the above standards.

[Added by Ord. 1238, provisions eff. 6/4/04.]

Section 110.330.15 Poultry and Rabbits. Poultry and rabbits may be raised for domestic, non-commercial use in all Rural and the Low and Medium Density Suburban Regulatory Zones. A minimum lot area of twelve thousand (12,000) square feet shall be required for keeping poultry and rabbits in these regulatory zones.

[Added by Ord. 1238, provisions eff. 6/4/04.]

Section 110.330.20 Livestock. Livestock, including cows, pigs, sheep, goats and horses as defined in Section 55, Animals and Fowl, of the Washoe County Code or any mutations or

hybrids thereof, donkeys, burros, mules, llamas, alpacas and miniature pigs (except as provided for in Section 110.330.35), shall be permitted in all Rural, and the Low and Medium Density Suburban Regulatory Zones, subject to the following provisions:

(a) Such animals shall not be maintained on any parcel of less than one-half (.5) acre.

(b) On parcels ranging in size from one-half (.5) acre to less than thirty-five thousand (35,000) square feet in size, two (2) adult livestock may be kept. Offspring of the permitted livestock may remain on the parcel until they reach twelve (12) months of age.

(c) On any parcel thirty-five thousand (35,000) square feet or more in size, there shall be no restriction on the number of such animals kept, provided such animals are kept in compliance with all applicable provisions of Washoe County Code Chapter 55, Animals and Fowl; Washoe County District Health Department regulations; and not subject to Nevada Revised Statutes 574, Cruelty to Animals.

[Added by Ord. 1238, provisions eff. 6/4/04.]

Section 110.330.25 Dogs and Cats. Dogs, cats and other small household pets are permitted in all regulatory zones. The number of household pets allowed on a property may be restricted by Washoe County Code Chapter 55, Animals and Fowl.

[Added by Ord. 1238, provisions eff. 6/4/04.]

Section 110.330.30 Birds. Birds kept as household pets are permitted in all regulatory zones.

[Added by Ord. 1238, provisions eff. 6/4/04.]

Section 110.330.35 Miniature Pigs. A Vietnamese potbellied pig (*sus scrofa vittatus*) or other similar miniature pig breeds may be considered a domesticated pet, similar to a dog or cat, and shall be permitted in all Urban and Suburban Regulatory Zones on property less than one-half (.5) acre subject to the following conditions:

(a) The pig must be registered or certified by a veterinarian to be a purebred miniature pig that has received all appropriate vaccinations;

(b) The pig must be spayed or neutered upon reaching maturity and so certified by a veterinarian;

(c) No more than one (1) pig will be kept per residence; and

(d) An outdoor pen or enclosure for the pig must not be located within fifteen (15) feet of a property line and must be kept clean and odor free.

[Added by Ord. 1238, provisions eff. 6/4/04.]

Section 110.330.40 Exotic Animals. Exotic animals including, but not limited to, any bear, canine, feline, hoofed animal, marsupial, primate, raptor or reptile shall be allowed only as set forth in Chapter 55, Animals and Fowl, of the Washoe County Code.

[Added by Ord. 1238, provisions eff. 6/4/04.]

Section 110.330.45 4-H and Future Farmers of America Livestock Projects. In the Medium Density Suburban Regulatory Zone, poultry (hens only), rabbits, cavy, sheep, swine and goats may be raised as 4-H or Future Farmers of America (FFA) projects for a limited time, not to exceed the duration of the project year, subject to the provisions of this section and all provisions of Washoe County Code Chapter 55; all Washoe County District Health Department regulations; Nevada Revised Statutes 574; subject to the code of conduct and standards of the 4H or FFA organization, and the following:

(a) A minimum lot area of six thousand (6,000) square feet shall be required for the keeping of no more than a total of six (6) poultry (hens only), cavy or rabbits; and

(b) A minimum lot area of twelve thousand (12,000) square feet shall be required for the keeping of a sheep, swine or goat. No more than one (1) animal may be kept on a property with a lot size from twelve thousand (12,000) square feet to one-half (.5) acre.

[Added by Ord. 1238, provisions eff. 6/4/04; amended by Ord. 1247, provisions eff. 9/24/04.]

Section 110.330.50 Dog Training Services. Dog training services shall be permitted with the issuance of a general business license and shall comply with the provisions of this section.

(a) Location. A minimum lot area of twelve thousand (12,000) square feet in all regulatory zones or within existing commercial, industrial or civic development.

(b) Incidental Use of Residential Property. If the dog training services are located on a property designated for residential use, the use of the residence for the dog training service shall be clearly incidental and subordinate to its use for residential purposes. The dog training services may be conducted in the principal dwelling, permitted detached accessory structure, rear or side yard, or adjacent property associated with the residential use. When conducted in a garage, the dog training service shall not eliminate the use of the garage as a parking space for a vehicle.

(c) Outdoor Storage. There shall be no outdoor storage of materials, equipment, supplies or solid waste used or associated with the dog training services that can be viewed from any street, access or adjoining property.

(d) Business Vehicle. Within residential land use designations, one (1) vehicle used for the dog training services, not to exceed eight thousand (8,000) pounds gross unladen weight and no larger than two (2) axles shall be permitted. Accessory utility trailers or dog boxes may be permitted, provided they are parked off the street, regularly used off-site in the conduct of the dog training and not used solely for storage or advertising.

(e) Annual Inspection. All dog training services may be required to submit to an annual inspection by Community Development staff for safety and compliance purposes.

(f) Noise. Noise associated with the use, measured at the property line of residential regulatory zones during times of operation shall be 65dB, A-weighted or less average during the duration of the class. No mechanical amplification of sound shall be allowed during the dog training.

(g) Light. Light in association with the dog training services shall adhere to the limitations within Section 110.414.21, Light and Glare.

(h) Control of Dogs. All dogs associated with the dog training services shall be controlled in a manner consistent with the training instruction being given, so as to provide a safe and secure environment for the dogs, their handlers and the public.

(i) No Boarding. Dogs may not be boarded in association with dog training services. (See Commercial Kennels, Section 110.304.35(c)(1) for classification allowing boarding.)

(j) Operations Plan Required. An operations plan must be submitted to the Department of Community Development prior to the issuance of a general business license.

(1) A sketch, to scale, of the exterior yard area or interior space to be used for the dog training.

(2) The plan shall indicate the type of training to be held, the number of dogs in each class, the length of time for each class, the number of classes to be held each day, the days the classes will be held and the maximum number of spectators that may be present for each class.

(i) A parking plan indicating the maximum number of vehicles to be parked on and off the site, projected needs for parking at the site and means to satisfy the projected needs. In no case shall a parking plan be approved which obstructs public and/or emergency vehicles or relies on parking adjacent to neighboring residential properties without the consent of the adjacent property owner.

(ii) If the dog training services are held outdoors utilizing a property with an established commercial, civic or industrial use, the classes shall not reduce the number of parking spaces needed for the primary use. Sharing of the parking lot during hours when the primary use is not operating is encouraged.

(3) A written statement from the applicant agreeing to adhere to the provisions of this section and the conditions placed on the business license.

(4) The operations plan shall be reviewed and may be subsequently approved, modified or approved with conditions by the Director of Community Development or his/her authorized representative. The final operations plan will serve as the conditions placed on the business license.

[Added by Ord. 1238, provisions eff. 6/4/04.]

Section 110.330.55 Agricultural Buildings. Agricultural buildings may be established subject to the provisions of this section.

(a) Agricultural buildings as a Main Use. Buildings, corrals, coops, pens, stables or structures used in conjunction with agricultural uses or shelter for livestock may be constructed, erected or located, and used without a permissive main residential dwelling in any Rural and Low Density Suburban Regulatory Zone allowing agricultural use types as identified in Table 110.302.05.5, Table of Uses (Agricultural Use Types), or the shelter of livestock provided that the following conditions are met:

(1) The structures shall be used for the storage of agricultural equipment and products related to an allowed on-site agricultural use or shelter for livestock that must live on the property;

(2) The structure shall be located at least one hundred (100) feet from the property line, any street or highway, a public park or school; and

(3) The structure shall maintain the height standards for the main structure in the regulatory zone in which it is located as enumerated in Table 110.406.05.1, Standards.

(i) The structure may include a second story for the storage of hay, tack or other agricultural related equipment.

(ii) No part of the structure shall be classified as habitable space according to the building code in effect in Washoe County at the time the building permit is obtained.

(iii) The structure shall be limited to two (2) plumbing fixtures. Automatic watering systems for livestock shall not be considered a plumbing fixture for purposes of this limitation.

(iv) *Exception: Two (2) story barns with a main dwelling unit incorporated into the design shall be reviewed as a dwelling unit.*

(b) Agricultural Buildings as Accessory Structures. Any structure used for agricultural purposes or the shelter of livestock established within a residential regulatory zone or rural property with an established main residential dwelling shall adhere to the standards in Section 110.306.10, Detached Accessory Structures, with the following exceptions:

(1) The structure may include a second story for the storage of hay, tack or other agricultural related equipment when the setback is at least one hundred (100) feet from any property line, street or highway, public park or school; and

(2) No part of the structure is classified as habitable space according to the building code in effect in Washoe County at the time the building permit is obtained.

(3) The structure shall be limited to two (2) plumbing fixtures. Automatic watering systems for livestock shall not be considered a plumbing fixture for purposes of this limitation.

(c) Requirements for the Agricultural Slaughtering of Animals. Animals must be slaughtered within a building subject to the following conditions:

(1) All agricultural buildings used for the agricultural slaughtering of animals shall conform to the following requirements:

(i) Must be located on a parcel of land that is a minimum of two-and-one-half (2.5) acres in size;

(ii) Must be located at least one hundred (100) feet from a property line, any street or highway, a public park or school;

(iii) Be limited to only one (1) agricultural building for animal slaughtering on any one (1) parcel; and

(iv) Must be of a size to accommodate the entire slaughtering process and shall include an area large enough to hold the animal or animals to be slaughtered, an area for preparing the animal product, an area for storing the animal product, animal waste and carcasses, and an area for cleanup.

(2) All animal waste and carcasses created through the agricultural slaughtering process shall be removed from the premises to an approved District Health Department disposal area within twenty-four (24) hours of the slaughtering of the animal.

(3) Only animals raised on-site may be slaughtered as part of an agricultural slaughtering process.

[Added by Ord. 1238, provisions eff. 6/4/04.]

Article 332
AGGREGATE FACILITIES

Sections:

110.332.00	**Purpose**
110.332.05	**Applicability**
110.332.10	**Aggregate Facility Types**
110.332.15	**Operation Requirements**
110.332.20	**Special Review Considerations**
110.332.25	**Responsibilities of Owner and/or Operator**
110.332.30	**Noncompliance with Conditions**
110.332.35	**Compliance with Article**
110.332.40	**Periodic Review of Conditions**

Section 110.332.00 Purpose. The purpose of this article, Article 332, Aggregate Facilities, is to ensure compatibility between aggregate facilities and surrounding land uses, to promote the continued access to aggregate resources, and to minimize adverse impacts on the environment and surrounding areas.

[Added by Ord. 1039, provisions eff. 11/1/98.]

Section 110.332.05 Applicability. Aggregate and borrow facilities are classified under the aggregate facilities use type in Section 110.304.30, Industrial Use Types, and as such may be permitted in those regulatory zones set forth in Table 110.302.05.4, Table of Uses. Restricted market temporary aggregate facilities are allowed in any regulatory zone. Uses ancillary to aggregate facilities include concrete and asphalt batch plants, crushers, and other uses deemed appropriate by the Director of Community Development.

[Added by Ord. 1039, provisions eff. 11/1/98, amended by Ord. 1378, provisions eff. 8/1/08.]

Section 110.332.10 Aggregate Facility Types. Aggregate facilities shall require the granting of a special use permit. The special use permit application shall include a detailed mining plan in accordance with the provisions of this section.

(a) Open Market Aggregate Facilities. An applicant for open market aggregate facilities on private or public lands shall be subject to the provisions of this subsection.

(1) The owner and/or operator shall submit a detailed mining plan, to include adequate measures addressing safety and environmental concerns, including but not limited to hours of operation and maintenance, fencing and signage, storm drainage, stockpiling of topsoil, and erosion control, both during the operation and for the phased reclamation of the site upon completion of mining for each phase of the operation. This plan shall be submitted to the Washoe County Engineering Division and the District Health Department for approval.

(2) Once the plan is approved, the owner and/or operator shall post adequate financial assurance to the satisfaction of the County Engineer.

(3) The Washoe County Engineer shall review the financial assurance as necessary, or at least every three (3) years, and adjust its amount as deemed appropriate by the Washoe County Engineering Division.

(4) On public lands, the application shall include confirmation that the public land manager has approved submittal of the application.

(5) On public lands, should a federal agency not require an adequate bond for complete restoration of the site, the owner and/or operator shall submit a detailed mining plan to include complete restoration of the site and provide adequate bonding to the satisfaction of the County Engineer.

(b) Restricted Market Temporary Aggregate Facilities. Aggregate facilities subject to this subsection are allowed in any regulatory zone. Both private projects and public works construction projects are included in this type. An applicant for restricted market temporary aggregate facilities on public or private lands shall be subject to the provisions of subsection (a) and this subsection.

(1) The temporary aggregate site shall identify the project that it is to serve and the project must be within a five (5) mile radius.

(2) No use permit for a temporary facility shall be effective until the project which it is to serve has received all necessary approvals. Concurrent processing of applications will be allowed.

(3) No outside sales of the materials will be allowed.

(4) The project size must indicate that a minimum of one hundred thousand (100,000) gross cubic yards and a maximum of ten million (10,000,000) gross cubic yards will be required.

(5) The temporary pit will remain open as long as the project is active and using aggregate from the pit.

[Added by Ord. 1039, provisions eff. 11/1/98.]

Section 110.332.15 Operation Requirements. The operation of aggregate facilities shall conform to the provisions of this section.

(a) Notice of Shutdown. During the period of operation, the owner and/or operator shall notify the Department of Community Development of seasonal or permanent shutdown occurrences.

(b) Drainage Preservation. During the period of operation, the mining plan shall allow for and conserve the historic topographical drainage. In so complying, the applicant shall in no way increase drainage and/or runoff water to or from any adjacent property.

(c) Dust Control. During the period of operation, the owner and/or operator shall provide adequate on-site dust control in the pit area, on haul roads and for any material processing to the satisfaction of the District Health Department.

(d) Hauling Requirements. During the period of operation, all loads of material exiting the site shall be tarped or treated for dust or loose material, to the satisfaction of the District Health Department and Nevada Department of Transportation. Haul routes for all vehicles and equipment, to and from the site, shall be subject to approval by the Washoe County Engineering Division.

[Added by Ord. 1039, provisions eff. 11/1/98.]

Section 110.332.20 Special Review Considerations. In addition to the findings required by Article 810, Special Use Permits, prior to approving an application for aggregate operations, the following special review considerations are addressed in the record:

(a) Conservation of topsoil;

(b) Protection of surface and subsurface water;

(c) Conservation of natural vegetation, wildlife habitats and fisheries;

(d) Control of erosion;

(e) Control of drainage and sedimentation;

(f) Provision of visual and noise buffering;

(g) Accommodation of heavy traffic on roadways;

(h) Provision of restoration and/or reuse of the site;

(i) Provision of a bonding program commensurate with the total costs of requirements imposed; and

(j) Preservation of the recreation opportunities, air quality, archaeological resources, character of the area and other conditions as necessary.

[Added by Ord. 1039, provisions eff. 11/1/98, amended by Ord. 1378, provisions eff. 8/1/08.]

Section 110.332.25 Responsibilities of Owner and/or Operator. The owner and/or operator are responsible for compliance with the provisions of this section.

(a) Compliance with Applicable Laws. All plans shall be in compliance with all applicable local, state and federal statutes, ordinances, rules, regulations and policies in effect at the time of submittal for any required permit.

(b) Compliance with Special Use Permit Conditions. All plans submitted for any required permit shall be in substantial compliance with the plans and documents approved and made part of the special use permit to the satisfaction of the Department of Community Development. A copy of the approved special use permit shall be attached to any application for a required permit.

(c) Sale of Site. The owner and any successors shall direct any potential purchaser of the site or aggregate facility to meet with Department of Community Development staff to review the conditions of approval prior to final sale. Any subsequent purchaser or operator shall notify Community Development staff of the name, address and contact person of the new purchaser.

(d) Cancellation of Special Use Permit. If the operation should cease for a period of twelve (12) months, the special use permit shall become null and void. The applicant will be required to file a new application with the Department of Community Development for appropriate review and approval.

(e) Financial Assurances. The applicant shall ensure that any financial assurances required by the provisions of the special use permit are maintained for the life of the project to the satisfaction of the Engineering Division. Should transfer of the site or the special use permit occur without the continuation of the financial assurances, the special use permit shall become null and void.

[Added by Ord. 1039, provisions eff. 11/1/98.]

Section 110.332.30 Noncompliance with Conditions. Compliance with the conditions of the special use permit is the responsibility of the operator, its successors in interest, and all owners and occupants and their successors in interest. Compliance with conditions shall be reviewed on an annual basis. This review shall be based upon submittal of a report by the applicant detailing compliance with conditions of the special use permit. Failure to comply with any of the conditions of approval shall be considered a violation of the Development Code and subject to the provisions of Article 910, Enforcement, of the Development Code and may result in the institution of revocation procedures by the Board of County Commissioners.

[Added by Ord. 1039, provisions eff. 11/1/98.]

Section 110.332.35 Compliance with Article. All active aggregate facilities shall comply with the provisions of Article 332, Aggregate Facilities, by December 31, 2001. Enforcement of this provision shall be accomplished as follows:

(a) The Director of Community Development shall give written notice by certified mail to the owner and/or operator of all active aggregate facilities of the adoption of Article 332 within one hundred twenty (120) days from the effective date of this article (November 1, 1998).

(b) Any aggregate facility not securing a new or renewed special use permit consistent with Article 332 by December 31, 2001 shall be scheduled for a revocation hearing before the Board of County Commissioners, or, if no special use permit has been issued therefor, to cease operation.

[Added by Ord. 1039, provisions eff. 11/1/98.]

Section 110.332.40 Periodic Review of Conditions. For aggregate facilities approved for a period of more than five (5) years, a review of the conditions of approval shall occur at least every five (5) years from the initial special use permit approval date to ensure that the conditions of approval adequately provide for compatibility between aggregate operations and surrounding land uses. Enforcement of this provision shall be accomplished as follows:

(a) The owner and/or operator of any aggregate facility approved without a review date shall submit a request to the Community Development Department for a

review of conditions within one hundred eighty (180) days of the effective date of this article (November 1, 1998). At this review hearing and at each hearing thereafter, a date shall be established for the next scheduled review of conditions. In no case shall the time between reviews be more than five (5) years. The owner and/or operator shall request these reviews prior to one hundred eighty (180) days of the date set at the previous review.

(b) The owner and/or operator of any aggregate facility seeking an extension of an approved special use permit shall request an extension and review of conditions no less than one hundred eighty (180) days prior to the expiration of the special use permit. The extension shall consider the required findings and special considerations for aggregate operations to ensure that the conditions of approval adequately provide for compatibility between aggregate operations and surrounding land uses.

[Added by Ord. 1039, provisions eff. 11/1/98, amended by Ord. 1378, provisions eff. 8/1/08.]

Article 334
MINING

Sections:

110.334.00	**Purpose**
110.334.05	**Applicability**
110.334.10	**Requirements for Application**
110.334.15	**Operation Requirements**
110.334.20	**Special Review Considerations**
110.334.25	**Responsibilities of Owner and/or Operator**
110.334.30	**Noncompliance with Conditions**

Section 110.334.00 Purpose. The purpose of this article, Article 334, Mining, is to ensure compatibility between mining operations on private and public land and surrounding land uses, and to minimize adverse impacts on the environment.

Section 110.334.05 Applicability. Mining is classified under the mining operations use type in Article 304, Use Classification System. Applications for mining operations may be accepted in those regulatory zones as set forth in Article 302, Allowed Uses.

Section 110.334.10 Requirements for Application. Application for mining operations shall require a special use permit and shall include a detailed mining plan in accordance with the provisions of this section, where applicable.

(a) Private Land. An applicant for mining on private land shall be subject to the provisions of this subsection.

(1) The owner and/or operator of a mining operation on private land shall submit a detailed mining plan, to include adequate measures addressing safety and environmental concerns including, but not limited to, hours of operation and maintenance, fencing and signage, storm drainage, stockpiling of topsoil and erosion control, both during the operation and for the phased restoration of the site upon completion of mining for each phase of the operation. This plan shall be submitted to the Washoe County Engineering Division and the District Health Department for approval.

(2) Once the plan is approved, the applicant shall post an adequate financial assurance to the satisfaction of the County Engineer.

(3) The Washoe County Engineer shall review the financial assurance as necessary, or at least every three (3) years, and adjust its amount as deemed appropriate by the Engineering Division.

(b) Public Land. On public land, should a federal agency not require an adequate bond for complete restoration of the site, the applicant shall submit a detailed mining plan to include complete restoration of the site and provide adequate bonding to the satisfaction of the County Engineering Division.

[Amended by Ord. 1039, provisions eff. 11/1/98.]

Section 110.334.15 Operation Requirements. The operation of the mine shall conform to the provisions of this section.

(a) Notice of Shutdown. During the period of operation, the owner and/or operator shall notify the Department of Community Development and any other agency from which approval to operate has been received, and any other applicable agencies of any seasonal, temporary or permanent shutdown occurrences.

(b) Drainage Preservation. During the period of operation, the mining plan shall allow for and preserve the historic topographical drainage. In so complying, the applicant shall in no way increase drainage and/or runoff water to or from any adjacent property.

(c) Dust Control. During the period of operation, the owner and/or operator shall provide adequate on-site dust control in the pit area, on haul roads and for any material processing to the satisfaction of the District Health Department.

(d) Hauling Requirements. During the period of operation, all loads of material exiting the site shall be tarped or treated for dust or loose material, to the satisfaction of the District Health Department and Nevada Department of Transportation. Haul routes for all vehicles and equipment, to and from the site, shall be subject to approval by the Washoe County Engineering Division.

[Renumbered from Section 110.334.20 by Ord. 875, provisions eff. 8/3/93. Amended by Ord. 1039, provisions eff. 11/1/98.

Section 110.334.20 Special Review Considerations. In addition to the findings required by Article 810, Special Use Permits, prior to approving an application for mining operations, the record shall demonstrate that the following special review considerations are addressed:

(a) Preservation of topsoil;

(b) Protection of surface and subsurface water;

(c) Preservation of natural vegetation, wildlife habitats and fisheries;

(d) Control of erosion;

(e) Control of drainage and sedimentation;

(f) Provision of visual and noise buffering;

(g) Accommodation of heavy traffic on roadways;

(h) Provision of restoration and reuse of the site;

(i) Provision of a phased bonding program and liability commensurate with total costs of requirements imposed; and

(j) Preservation of the recreation opportunities, air quality, archaeological resources, character of the area and other conditions as necessary.

[Section 110.334.25 entitled "Findings" renumbered to Section 110.334.20 by Ord. 875, provisions eff. 8/3/93. Renamed from "Findings" and amended by Ord. 1039, provisions eff. 11/1/98. Amended by Ord. 1378, provisions eff. 8/1/08.]

Section 110.334.25 Responsibilities of Owner and/or Operator. The owner and/or operator are responsible for compliance with the provision of this section.

(a) Compliance with Applicable Laws. All plans shall be in compliance with all applicable local, state and federal statutes, ordinances, rules, regulations and policies in effect at the time of submittal for any required permit.

(b) Compliance with Special Use Permit Conditions. All plans submitted for any required permit shall be in substantial compliance with the plans and documents approved and made part of the special use permit to the satisfaction of the Department of Community Development. A copy of the approved special use permit shall be attached to any application for a required permit.

(c) Sale of Site. The owner and any successors shall direct any potential purchaser of the site or mining operation to meet with Department of Community Development staff to review the conditions of approval prior to final sale. Any subsequent purchaser shall notify Community Development staff of the name, address and contact person of the new purchaser.

(d) Cancellation of Special Use Permit. If the operation should cease for a period of twelve (12) months, the special use permit shall become null and void. The applicant will be required to file a new application with the Department of Community Development for appropriate review and approval.

(e) Financial Assurances. The applicant shall ensure that any financial assurances required by the provisions of the special use permit are maintained for the life of the project to the satisfaction of the Engineering Division. Should transfer of the site or the special use permit occur without the continuation of the financial assurances, the special use permit shall become null and void.

[Renumbered from Section 110.334.30 by Ord. 875, provisions eff. 8/3/93. Renamed from "Responsibilities of Applicant and Operator" and amended by Ord. 1039, provisions eff. 11/1/98.]

Section 110.334.30 Noncompliance with Conditions. Compliance with the conditions of the special use permit is the responsibility of the operator, its successors in interest, and all owners and occupants and their successors in interest. The special use permit shall be reviewed on an annual basis by the Department of Community Development during the period of operation. This review shall be based upon submittal of a report by the applicant detailing compliance with conditions of the special use permit. Failure to comply with any of the conditions of approval shall be considered a violation of the Development Code and may result in the institution of revocation procedures by the Board of County Commissioners.

[Renumbered from Section 110.334.35 by Ord. 875, provisions eff. 8/3/93. Amended by Ord. 1039, provisions eff. 11/1/98.]

[Section 110.334.15 entitled "Conditions of Approval" repealed by Ord. 875, provisions eff. 8/3/93.]

Article 336
AFFORDABLE HOUSING INCENTIVES

This section reserved for future ordinance.

Article 338
CHILD DAYCARE DEVELOPMENT INCENTIVES

This section reserved for future ordinance.

Article 340
INDUSTRIAL PERFORMANCE STANDARDS

[This Article added by Ord. 908, provisions eff. 10/15/94.]

Sections:

110.340.00	**Purpose**
110.340.05	**Applicability**
110.340.10	**Compliance**
110.340.15	**Measurements**
110.340.20	**General Standards**
110.340.25	**Odors**
110.340.30	**Lighting**
110.340.35	**Vibration**
110.340.40	**Dust, Smoke and Other Air Emissions**
110.340.45	**Access**
110.340.50	**Traffic Reports**
110.340.55	**Transportation Improvements**
110.340.60	**Public Services and Facilities**
110.340.65	**On-Site Hazardous Substance Holding**

Section 110.340.00 Purpose. The purpose of this article, Article 340, Industrial Performance Standards, is to prescribe standards for development that promote compatibility with surrounding areas and land uses.

Section 110.340.05 Applicability. The provisions of this article shall apply to the development of all uses in the Industrial Regulatory Zones, as set forth in Section 110.302.05, Table of Uses.

Section 110.340.10 Compliance. Prior to the issuance of a building permit or business license, applicants shall provide evidence to the Department of Community Development that the proposed development is in full compliance with the requirements set forth in this article and other applicable articles in this Development Code.

Section 110.340.15 Measurements. Measurements necessary to determine compliance with the provisions of this article shall be performed in accordance with accepted engineering practices.

Section 110.340.20 General Standards. Proposed development shall be in compliance with the requirements of this section.

(a) Noise. Proposed development shall conform to the noise standards set forth in Article 414, Noise and Lighting Standards.

(b) Setbacks. Proposed development shall conform to the setback standards set forth in Article 406, Building Placement Standards.

(c) Screening and Buffering. Screening and buffering requirements for proposed development shall be as set forth in Article 434, Site Compatibility Standards, and Article 412, Landscaping.

(d) Parking. Proposed development shall provide sufficient on-site parking in accordance with the provisions of Article 410, Parking and Loading.

(e) Signs. Signs for uses subject to this article shall be consistent with Division Five of this Development Code.

[This Section amended by Ord. 919, provisions eff. 2/1/95.]

Section 110.340.25 Odors. All uses subject to this article shall be so operated as not to emit odorous matter which are perceptible by the average person at or beyond the lot line of the lot containing the proposed development.

Section 110.340.30 Lighting. Uses subject to this article shall be operated consistent with the provisions of this section.

(a) Placement. All lights shall be placed so as to prohibit spillover illumination or glare onto adjoining properties.

(b) Bulb Type. No bare bulbs shall be permitted unless they are effectively screened and shielded so as to prevent spillover illumination and glare onto adjacent property.

Section 110.340.35 Vibration. Uses subject to this article shall be operated consistent with the provisions of this section.

(a) Perceptibility Beyond Lot Line. Uses shall not generate ground vibration which is perceptible without instruments by the average person at or beyond the lot line of the lot containing such activities.

(b) Adjoining Equipment and Facilities. Uses shall not generate ground vibration which interferes with the operations of equipment and facilities of adjoining lots.

(c) Exceptions. Vibrations caused by motor vehicles, trains, aircraft, demolition and construction are exempt from the provisions of this section.

Section 110.340.40 Dust, Smoke and Other Air Emissions. Uses which emit, or may emit, any air contaminant shall register and operate in accordance with the Washoe County District Health Department.

Section 110.340.45 Access. Access for uses subject to this article shall be in accordance with the provisions of this section.

(a) Access Points. Access to any development shall be limited to one (1) point for each property or two (2) per street provided they are at least two hundred (200) feet apart, except along limited access freeways where direct access is prohibited.

(b) Additional Access Points. If, in the opinion of the County Engineer, additional access points are required to ensure public safety and traffic operation, one (1) additional driveway may be permitted for properties with a street frontage greater

than two hundred fifty (250) feet, or two (2) additional driveways may be permitted for properties with a street frontage greater than five hundred (500) feet.

(c) Common Access. Adjoining parcels with less than one hundred (100) feet of street frontage each shall share a common access constructed on or within a prescribed distance from the property line. This provision may be waived by the Director of Community Development upon the submission of evidence that this provision cannot be met or creates a hardship.

(d) Frontage Road. When determined by the County Engineer, a frontage road shall be constructed for large or adjoining parcels rather than allowing multiple access routes to a roadway.

(e) Access to Residential Streets. Truck route traffic shall not have access to a local street that primarily serves residential uses, with the exception of providing emergency access routes.

(f) Access to Arterial and Collector Roads. Uses subject to this article shall have direct access to an existing or planned arterial or collector road or indirect access if the use is within an industrial park with local industrial-serving streets which have no impact on non-compatible uses.

Section 110.340.50 Traffic Reports. A traffic report shall be required if the proposed use will generate eighty (80) or more peak hour trips as determined by the latest edition of the *Institute of Transportation Engineers Trip Generation Report* or other such sources as approved by the Regional Transportation Commission (RTC).

(a) Preparation Guidelines. Traffic reports shall be prepared in accordance with Department of Community Development "Traffic Report Guidelines".

(b) Submittal. Traffic reports shall be included in the submittal of an application for development.

Section 110.340.55 Transportation Improvements. Uses subject to this article shall comply with the provisions of this section.

(a) Level of Service (LOS). Uses shall be required to make use-related off-site transportation improvements necessary to maintain adopted County LOS Thresholds for Roadways and LOS Criteria for Unsignalized and Signalized Intersections.

(b) Off-Site Transportation Improvements. Off-site transportation improvements shall be sized for the number of projected trips per day and peak trips per hour, and as approved by the County Engineer.

(c) On-Site Transportation Improvements. The proposed development shall be responsible for all on-site transportation improvements including, but not limited to, driveways, internal circulation system and roadways required to connect uses to arterial roadways.

(d) Demand Management. Uses which generate over seven hundred fifty (750) average daily trips shall include, as part of an application for development, a description of existing or proposed public transportation services, park and ride

programs, employer sponsored shuttles, or other similar programs or policies to reduce demand for automobile trips.

Section 110.340.60 Public Services and Facilities. Public services and facilities shall be provided in accordance with County requirements and the following provisions:

(a) Fire and Emergency Medical Services. The proposed development site shall have a maximum ten (10) minute response time for fire and emergency medical services, as verified by the agency designated for fire protection.

(b) Police Services. The proposed development site shall have a maximum fifteen (15) minute response time for police services, as verified by the agency designated for police protection.

(c) Community Water System. The proposed development shall be connected to a community water system and shall dedicate to Washoe County or other appropriate water purveyor at least one (1) acre-foot/year/acre of water, unless otherwise determined through development review.

(d) Community Disposal System. Consistent with the provisions of Article 704, Adequate Public Facilities: Sanitary Sewer, new development shall be connected to a community disposal system and shall provide four hundred fifty-seven (457) gallons/day per acre of waste water disposal capacity, unless otherwise determined through development review.

Section 110.340.65 On-Site Hazardous Substance Holding. All applicants for proposed development that include on-site hazardous substance holding shall be required to obtain a special use permit pursuant to Article 810, Special Use Permits, and shall be in accordance with the provisions of this section.

(a) Inventory. Applicants shall complete hazardous substance inventories in accordance with reporting requirements as regulated by the following:

(1) Federal Superfund Amendments and Re-authorization Act (SARA), Title III, Tier II;

(2) NRS 477, Statutes of the State Fire Marshal; and

(3) NRS 459.3828, Registration of Highly Hazardous Substances and Registration of SARA Facilities and Substances.

(b) Risk Management and Prevention Plan. Applicants shall be required to prepare a detailed risk management and prevention plan and obtain approval from the agency designated for fire protection. This plan shall be submitted at the time that the application for the special use permit is submitted.

(c) Compliance. Proposed development shall be in full compliance with the *Uniform Fire Code*, the *Uniform Building Code*, National Fire Protection Association standards, Nevada Revised Statutes, and applicable federal regulations.

(d) Review. Proposed development shall be reviewed by and shall obtain approval from the Washoe County District Health Department and appropriate agency designated for fire protection as a condition of approval.

Division Four - Development Standards
CONTENTS

	Page
Development Standards: Title and Contents	400-1
Density/Intensity Standards	402-1
Lot Standards	404-1
Building Placement Standards	406-1
Common Open Space Development	408-1
Parking and Loading	410-1
Landscaping	412-1
Noise and Lighting Standards	414-1
Flood Hazards	416-1
Significant Hydrologic Resources	418-1
Storm Drainage Standards	420-1
Water and Sewer Resource Requirements	422-1
Hillside Development	424-1
Scenic Areas (Reserved for Future Ordinance)	426-1
Alternative Energy Development Incentives (Reserved for Future Ordinance)	428-1
River Corridor Development (Reserved for Future Ordinance)	430-1
Open Space Standards	432-1
Regional Development Standards within Cooperative Planning Areas and all of Washoe County	434-1
Street Design Standards	436-1
Grading Standards	438-1
Public School Facilities Design Standards	440-1

LIST OF TABLES

Table 110.406.05.1: Standards	406-2
Table 110.410.10.1: Off-Street Parking Space Requirements (Residential Use Types)	410-2
Table 110.410.10.2: Off-Street Parking Space Requirements (Civic Use Types)	410-3
Table 110.410.10.3: Off-Street Parking Space Requirements (Commercial Use Types)	410-4
Table 110.410.10.4: Off-Street Parking Space Requirements (Industrial Use Types)	410-7
Table 110.410.10.5: Off-Street Parking Space Requirements (Agricultural Use Types)	410-8
Table 110.410.15.1: Handicapped Accessible Spaces	410-11
Table 110.410.25.1: Parking Dimensions	410-14

Page

Table 110.436.25.1: Roadway Sections - A, General Applications: Arterial Highways 436-5

Table 110.436.25.2: Roadway Sections - B, General Applications: Streets Serving Lot Sizes Less Than 0.5 Acres 436-6

Table 110.436.25.3: Roadway Sections - C, General Applications: Streets Serving Lot Sizes 0.5 - 1.5 Acres 436-7

Table 110.436.25.4: Roadway Sections - D, General Applications: Streets Serving Lot Sizes Greater Than 1.5 Acres 436-8

Table 110.436.25.5: Sidewalk Requirements 436-9

Table 110.436.45.1: AASHTO Minimum Design Radius Criteria 436-13

Table 110.438.10.1: Permits Required 438-2

LIST OF FIGURES

Figure 110.410.15.1: Motorcycle Parking Dimensions 410-10

Figure 110.410.15.2: Bicycle Parking Dimensions 410-10

Figure 110.410.15.3: Handicapped Parking Dimensions 410-11

Figure 110.410.15.4: International Symbol of Accessibility 410-12

Figure 110.410.15.5: Accessible Routes 410-12

Figure 110.410.25.1: Parking Lot Layout 410-15

Figure 110.412.25.1: Total Developed Land Area 412-5

Figure 110.412.30.1: Intersection Visibility 412-6

Figure 110.412.40.1: Landscaping and Screening for Civic, Commercial, Industrial and Agricultural Use Types 412-8

Figure 110.412.50.1: Required Trees within Parking and Loading Areas 412-10

Figure 110.412.50.2: Landscaping and Screening for Parking and Loading Areas 412-11

Figure 110.412.55.1: Placement and Measurement Techniques for Screening Material 412-13

Figure 110.416.57.1: Exempted Parcels in Critical Flood Zone 1 416-10

Figure 110.416.57.2: Exempted Parcels in Critical Flood Zone 1 416-11

Figure 110.416.57.3: Exempted Parcels in Critical Flood Zone 1 416-12

Figure 110.424.30.1: Building Location Standards 424-9

Figure 110.424.30.2: Example of Split Pad and Stepped Foundation Design 424-9

Figure 110.424.30.3: Slope Ownership 424-10

Figure 110.424.30.4: Building Location Standards 424-10

Figure 110.434.25.1: Parcel Size Matching 434-3

Figure 110.434.25.2: Buffering 434-4

Figure 110.438.25.BW: Bench Width 438-4

Page

Figure 110.438.25.RWH: Retaining Wall Height 438-6
Figure 110.438.25.TW: Terrace Width 438-7
Figure 110.438.45.1: Grading 438-17
Figure 110.438.45.2: Slope Intersection 438-19
Figure 110.438.45.3: Slope Intersection 438-19
Figure 110.438.60.TOCS: Top of Cut Slope 438-22
Figure 110.438.60.TOFS: Toe of Fill Slope 438-23

LIST OF MAPS

Map 110.418.05.1: Significant Hydrologic Resources 418-4

Article 400
DEVELOPMENT STANDARDS: TITLE AND CONTENTS

Sections:

110.400.00	**Title**
110.400.05	**Contents**

Section 110.400.00 Title. Division Four of Chapter 110, Development Code, is entitled Development Standards.

Section 110.400.05 Contents. Division Four consists of the following articles:

(a) ARTICLE 400 DEVELOPMENT STANDARDS: TITLE AND CONTENTS

(b) ARTICLE 402 DENSITY/INTENSITY STANDARDS

(c) ARTICLE 404 LOT STANDARDS

(d) ARTICLE 406 BUILDING PLACEMENT STANDARDS

(e) ARTICLE 408 COMMON OPEN SPACE DEVELOPMENT

(f) ARTICLE 410 PARKING AND LOADING

(g) ARTICLE 412 LANDSCAPING

(h) ARTICLE 414 NOISE AND LIGHTING STANDARDS

(i) ARTICLE 416 FLOOD HAZARDS

(j) ARTICLE 418 SIGNIFICANT HYDROLOGIC RESOURCES

(k) ARTICLE 420 STORM DRAINAGE STANDARDS

(l) ARTICLE 422 WATER AND SEWER RESOURCE REQUIREMENTS

(m) ARTICLE 424 HILLSIDE DEVELOPMENT

(n) ARTICLE 426 SCENIC AREAS (Reserved for Future ordinance)

(o) ARTICLE 428 ALTERNATIVE ENERGY DEVELOPMENT INCENTIVES (Reserved for Future Ordinance)

(p) ARTICLE 430 RIVER CORRIDOR DEVELOPMENT (Reserved for Future Ordinance)

(q) ARTICLE 432 OPEN SPACE STANDARDS

(r) ARTICLE 434 REGIONAL DEVELOPMENT STANDARDS WITHIN COOPERATIVE PLANNING AREAS AND ALL OF WASHOE COUNTY

(s) ARTICLE 436 STREET DESIGN STANDARDS

[Amended by Ord. 919, provisions eff. 2/1/95; Ord. 939, provisions eff. 11/1/95; Ord 949, provisions eff. 5/1/96; Ord. 1112, provisions eff. 2/15/01; Ord. 1200, provisions eff. 6/6/03.]

Article 402
DENSITY/INTENSITY STANDARDS

Sections:

110.402.00	**Purpose**
110.402.05	**Standards**
110.402.10	**Heights: Special Provisions**

Section 110.402.00 Purpose. The purpose of this article, Article 402, Density/Intensity Standards, is to set forth the regulations governing the density and intensity of uses on a parcel.

Section 110.402.05 Standards. Part One of Table 110.406.05.1 sets forth the standards for the following:

(a) The maximum number of dwelling units per gross acre; and

(b) The maximum heights of buildings and structures.

[Amended by Ord. 876, provisions eff. 7/7/93.]

Section 110.402.10 Heights: Special Provisions.

(a) Exceptions. The maximum height standards do not apply to the following:

(1) Church spires, belfries, cupolas, domes, chimneys, flues, antennas, satellite dishes, or water towers, silos, windmills and wind machines, provided that measured height of the structure is limited or the structure is placed on the property to avoid falling across any property line;

(2) Parapet walls extending four (4) feet or less above the limiting height on which they rest;

(3) Bulkheads, elevator towers, one-story penthouses, water tanks or similar structures, provided that the aggregate floor area of such structures is not greater than one-half (1/2) of the total roof area; and

(4) Height of structures for development occurring in the Tahoe area shall be the most restrictive of Tahoe Regional Planning Agency standards and Washoe County standards.

(b) Public and Quasi-Public Buildings. Churches, schools and public buildings may exceed the maximum height limits subject to the approval of a special use permit.

(c) Accessory Buildings. The heights for accessory buildings are as set forth in Article 306, Accessory Uses and Structures.

(d) Antennas. The heights for antennas are as set forth in Article 324, Communication Facilities.

(e) Additional Restrictions in Navigable Airspace. In addition to the provisions of this article, no structure shall be erected, constructed, altered or maintained, and no tree shall be allowed to grow to height in excess of the applicable height limit established by Federal Aviation Regulation (FAR) Part 77 - "Objects Affecting Navigable Airspace" unless the Federal Aviation Administration (FAA) issues a determination of "No Hazard to Air Navigation" and the Airport Authority of Washoe County determines the structure does not place restrictions on airport operations and Washoe County determines it is otherwise safe and in the public interest.

[Amended by Ord. 876, provisions eff. 7/7/93; Ord. 1004, provisions eff. 1/30/98.]

Article 404
LOT STANDARDS

Sections:

110.404.00	**Purpose**
110.404.05	**Lot Standards**
110.404.10	**Reductions in Size**
110.404.15	**Double Counting Areas**
110.404.20	**Combining Lots**
110.404.25	**Common Open Space Development**

Section 110.404.00 Purpose. The purpose of this article, Article 404, Lot Standards, is to set forth the regulations governing the size and configuration of new lots to be created under the provisions of Division Six, Subdivision Regulations.

[Amended by Ord. 876, provisions eff. 7/7/93.]

Section 110.404.05 Lot Standards. The minimum lot area and lot width are set forth in Part Two of Table 110.406.05.1. The minimum lot area is limited by the ability to maintain the dwelling unit per acre standard set forth in Part One of Table 110.406.05.1.

[Amended by Ord. 876, provisions eff. 7/7/93.]

Section 110.404.10 Reductions in Size. No lot or parcel shall be reduced in area so as to be less in any dimension than is required by the requirements of the regulatory zone in which the lot or parcel is located. Parcels created for public agencies and for utilities regulated by the Public Utilities Commission are exempt from this requirement. Upon cessation of the use, the parcel created for the public agency or utility regulated by the Public Utilities Commission shall be reverted to acreage or abandoned in accordance with the Nevada Revised Statutes. Parcels previously created for this purpose shall be recognized under and subject to the provisions of this section.

[This Section amended by Ord. 1065, provisions eff. 7/1/99.]

Section 110.404.15 Double Counting Areas. No portion of any lot or parcel which is part of the required area for an existing building shall be used as a part of the required area of any other lot, parcel or existing building.

Section 110.404.20 Combining Lots. If two (2) or more lots must be combined to meet the minimum lot area or lot width requirements of this article, the lots shall be legally merged into one (1) lot before a building permit will be issued.

Section 110.404.25 Common Open Space Development. The provisions of Section 110.404.05, Lot Standards, may be modified pursuant to Article 408, Common Open Space Development. This modification may include the reduction in minimum lot sizes as long as the overall density is not increased beyond that permitted in a specific regulatory zone.

[Amended by Ord. 876, provisions eff. 7/7/93; Ord. 899, provisions eff. 5/31/94.]

Article 406
BUILDING PLACEMENT STANDARDS

Sections:

110.406.00	**Purpose**
110.406.05	**General**
110.406.10	**TRPA Standards**
110.406.15	**Double Counting Yards**
110.406.20	**Combining Lots**
110.406.25	**Unobstructed Yards**
110.406.30	**Front Yards**
110.406.35	**Side Yards**
110.406.40	**Rear Yards**
110.406.45	**Lot Width**
110.406.50	**Fences, Walls or Perimeter Planting**

Section 110.406.00 Purpose. The purpose of this article, Article 406, Building Placement Standards, is to set forth the regulations governing the placement of buildings on a lot.

Section 110.406.05 General. The yard requirements and setback dimensions are set forth in Part Three of Table 110.406.05.1. These requirements may be modified pursuant to Article 408, Common Open Space Development. All required yard setbacks are measured from the property line with the following exception: when an access easement traverses a portion of a property and has a total width of twenty (20) feet or more, or is maintained by the County, the required yard setback is measured from the easement edge closest to the proposed structure.

Table 110.406.05.1

STANDARDS

Part One: Density/Intensity Standards

	LDR	MDR	HDR	LDS	LDS 2	MDS	MDS 4	HDS	LDU	MDU
Dwelling Unit Per Acre (du/ac)	0.1	0.2	0.4	1	2	3h	4h	7a	10b	21c
Height (feet)	35	35	35	35	35	35	35	35	40	70

Part One: Density/Intensity Standards (continued)

	HDU	GC	NC	TC	I	PSP	PR	OS	GR	GRA
Dwelling Unit Per Acre (du/ac)	42c	n/a	5	n/a	n/a	n/a	n/a	n/a	0.025	0.025
Height (feet)	70	80	60	45	65	65	65	n/a	35	35

Notes:

a - 7 dwelling units per acre single-family detached; 9 dwelling units per acre for attached single-family and mobile home parks

b - 10 dwelling units per acre for single-family detached; 14 dwelling units per acre for multi-family and 12 units per acre for mobile home parks

c - Multi-family

h - 3 dwelling units per acre single-family detached; 5 dwelling units per acre for both single-family attached and manufactured home parks within areas designated as Trailer (TR) Overlay zone in effect prior to May 26, 1993

Part Two: Lot Size

	LDR	MDR	HDR	LDS	LDS 2	MDS	MDS 4	HDS	LDU	MDU
Minimum Lot Area (1,000's of sq. ft. unless otherwise indicated)	8ac	4ac	2ac	35	17.5	12	9	5	3.7d	8e
Minimum Lot Width (feet)	250	200	150	120	100	80	70	60	60	60

Part Two: Lot Size (continued)

	HDU	GC	NC	TC	I	PSP	PR	OS	GR	GRA
Minimum Lot Area (1,000's of sq. ft. unless otherwise indicated)	8f	10	10	10	10	n/a	n/a	n/a	40ac	40ac
Minimum Lot Width (feet)	60	75	75	100	100	100	n/a	n/a	660	660

Notes:

d - 3,700 square feet for single-family detached and 8,000 square feet with two (2) attached single-family dwelling units

e - 3,700 square feet for single-family detached and 8,000 square feet with four (4) multi-family units

f - 3,700 square feet for single-family detached and 8,000 square feet with eight (8) multi-family units

g - 40 acres nominally = 1/16 section

Table 110.406.05.1 (continued)

STANDARDS

Part Three: Yard and Setback Dimensions										
	LDR	MDR	HDR	LDS	LDS 2	MDS	MDS 4	HDS	LDU	MDU
Front Yard (feet)	30	30	30	30	30	20	20	20	15	15
Side Yards (feet)	50	15	15	12	10	8	7	5	5	5
Rear Yard (feet)	30	30	30	30	30	20	20	20	10	20

Part Three: Yard and Setback Dimensions (continued)										
	HDU	GC	NC	TC	I	PSP	PR	OS	GR	GRA
Front Yard (feet)	20	10	15	20	15	20	20	n/a	30	30
Side Yards (feet)	5	10	15	10	10	15	15	n/a	50	50
Rear Yard (feet)	20	10	20	10	15	20	20	n/a	30	30

Source: Sedway Cooke Associates

[Amended by Ord. 939, provisions eff. 11/1/95; Ord. 1023, provisions eff. 7/1/98; Ord. 1140, provisions eff. 12/31/01; Ord. 1290, provisions eff. 3/24/06; Ord. 1447, provisions eff. 9/9/10; Ord. 1458, provisions eff. 2/4/11; Ord. 1475, provisions eff. 1/12/12.]

Section 110.406.10 TRPA Standards. Requirements for development occurring in the Tahoe area including, but not limited to, building placement standards shall be the most restrictive of Tahoe Regional Planning Agency standards and Washoe County standards.

Section 110.406.15 Double Counting Yards. No required yard or open space around any building shall be considered a yard or open space for any other building on an adjoining lot or parcel.

Section 110.406.20 Combining Lots. If two (2) or more lots must be combined to meet the minimum yard requirements of this article, the lots shall be legally merged into one (1) lot before a building permit will be issued.

[Amended by Ord. 876, provisions eff. 7/7/93.]

Section 110.406.25 Unobstructed Yards. Any yard required by the Development Code shall be open and unobstructed from the ground to the sky except as provided in this article.

Section 110.406.30 Front Yards. Front yards shall comply with the provisions of this section.

(a) Through Lots. On through lots, either end lot line may be considered the front line, except when the access would be from a street classified as a collector or an arterial. The minimum rear yard shall not be less than the required front yard in the regulatory zone in which such lot is located. After development of the lot has occurred, the yard chosen as the front yard shall remain the front yard for all further development on the lot.

(b) Interior Lots. On any interior lot in any residential land use category or, in General Rural or General Rural Agricultural land use categories, the front yard requirement shall be fifteen (15) feet where the slope of the front half of the lot is greater than a two (2) foot rise (or fall) above (or below) the established street

grade for every ten (10) feet of horizontal distance. Plans submitted must be specific enough to establish conformance with these provisions.

(c) Corner Lots. On a corner lot, all yards abutting streets, other than collectors or arterials, shall be considered as front yards. Corner lots are required to have a side yard.

(d) Obstructions to Vision. There shall be no fences or other obstruction to vision more than eighteen (18) inches higher than curb level within the visibility triangle defined in Section 110.412.30, Public Safety.

(e) Architectural Features. Cornices, canopies, chimneys, eaves or other similar architectural features may extend into a required front yard not to exceed two (2) feet.

(f) Detached Garages. Detached garages may be located behind the required front setback.

(g) Decks. Decks which are less than eighteen (18) inches in height from the finished grade are not counted as a structure for front yard setback purposes.

[Amended by Ord. 876, provisions eff. 7/7/93; Ord. 939, provisions eff. 11/1/95; Ord. 899, provisions eff. 5/31/94; Ord. 1023, provisions eff. 7/1/98; Ord. 1475, provisions eff. 1/12/12.]

Section 110.406.35 Side Yards. Side yards shall comply with the provisions of this section.

(a) Outside Stairs. Outside stairs or landing places, if unroofed or unenclosed, may extend into a required side yard for a distance not to exceed three (3) feet.

(b) Architectural Features. Cornices, canopies, chimneys, eaves or other similar architectural features may extend into a required side yard not to exceed two (2) feet.

(c) Accessory Structures. Accessory structures may be located in a side yard as provided in Article 306, Accessory Uses and Structures, except that a guest building shall not be located in a side yard.

(d) Decks. Decks which are less than eighteen (18) inches in height from the finished grade are not counted as a structure for side yard setback purposes.

(e) Prior Zoning. Side yard requirements for lots created under the zoning in effect prior to May 26, 1993, may use the setbacks of the land use category comparable to the parcel size.

[Amended by Ord. 876, provisions eff. 7/7/93; Ord. 939, provisions eff. 11/1/95; Ord. 1023, provisions eff. 7/1/98.]

Section 110.406.40 Rear Yards. Rear yards shall comply with the provisions of this section.

(a) Outside Stairs. Outside stairs or landing places, if unroofed or unenclosed, may extend into a required rear yard for a distance of not to exceed five (5) feet.

(b) Architectural Features. Cornices, canopies, chimneys, eaves or other similar architectural features may extend into a required rear yard not to exceed two (2) feet.

(c) Accessory Structures. Accessory structures may be located in a rear yard as provided in Article 306, Accessory Uses and Structures.

(d) Decks. Decks which are less than eighteen (18) inches in height from the finished grade are not counted as a structure for rear yard setback purposes.

[Amended by Ord. 876, provisions eff. 7/7/93; Ord. 939, provisions eff. 11/1/95.]

Section 110.406.45 Lot Width.

(a) Modification of Standards. The Community Development Director may modify the standards of lot width to a lesser standard when, in his determination, there are compelling environmental considerations of topography or geology which necessitate a minor variation and do not result in parcel configurations inconsistent with the intent of these regulations. Such constraints may include: hillsides, creeks, wetlands, faults, rock outcroppings or other major constraints. The modification of the standard must facilitate superior building sites. This modification may not be granted for subsequent divisions of the same parcel.

(b) Flag Lots. The "pole" portion of any lot shall not be included either in the required minimum lot size or width calculations. The "pole" portion shall be a minimum of twenty (20) feet in width and a maximum of thirty (30) feet in width.

[Added by Ord. 1140, provisions eff. 12/31/01.]

Section 110.406.50 Fences, Walls or Perimeter Planting.

(a) Residential Use Types. The maximum height for fences, walls or perimeter planting is limited to four-and-one-half (4.5) feet in the required front yard setback except as noted by Section 110.406.30, Front Yards. The maximum height for fences, walls or perimeter planting for the remainder of the residential property is six (6) feet. Where two (2) or more of a property's frontages constitute front yards on a corner lot, one (1) of the yards shall be deemed to be the main entrance and all other yards with street frontage shall be considered modified side yards where fences, walls or perimeter planting can have a maximum height of six (6) feet as long as such fences, walls or perimeter planting are located at least ten (10) feet from the modified side yard property line. Barbed wire or razor wire livestock fencing in front yards is allowed only on lots with a size greater than one (1) acre.

(b) Commercial and Industrial Use Types. The fences, walls or perimeter planting in commercial and industrial development adjoining residential uses shall be at least six (6) feet but not more than eight (8) feet in height, in accordance with Article 412, Landscaping. The fences, walls or perimeter planting adjoining a street may be a maximum of six (6) feet in height. The fences, walls or perimeter planting adjoining non-residential uses may be a maximum of eight (8) feet in height.

(c) Specialty Fences. Specialty fences are permitted in all regulatory zones with the following provisions:

(1) A specialty fence shall only be for the purposes of enclosing a tennis court, racquetball court, basketball court or other court-type recreational activity, and for exotic animals when a fence is pursuant to the issuance of a permit from the Washoe County Exotic Animal Board.

(2) A specialty fence shall comply with the following provisions:

(i) The court or enclosure for which the fence is erected shall be located entirely to the side or rear of the main structure permitted on the property.

(ii) The fence may not be greater than ten (10) feet in height.

(iii) The fence may not prevent viewing through the fence. It may not be solid.

(iv) The fence must be of a color that blends with the background and in no instance may it be of a reflective material.

(v) The fence shall not be located closer than five (5) feet to the side or rear property lines.

(d) Entry Gate and Entry Columns. An entry gate and entry columns are permitted in all regulatory zones and are subject to the following provision:

(a) An entry gate and entry columns may exceed the allowable height of the fencing on adjacent fence panels by a maximum of eighteen (18) inches. Lighting fixtures may be placed on top of the entry column in excess of the height limitation.

[Added by Ord. 939, provisions eff. 11/1/95. Amended by Ord. 959, provisions eff. 7/26/96; Ord. 1023, provisions eff. 7/1/98.]

[Section 110.406.45 entitled "Visual Obstructions" amended by Ord. 876, provisions eff. 7/7/93; Ord. 899, provisions eff. 5/31/94 and repealed by Ord. 939, provisions eff. 11/1/95.]

Article 408
COMMON OPEN SPACE DEVELOPMENT

Sections:

110.408.00	**Purpose**
110.408.05	**Applicability**
110.408.10	**Applications**
110.408.15	**Non-Residential Uses**
110.408.20	**Density and Intensity**
110.408.25	**Lot and Yard Standards**
110.408.30	**Site Analysis to Determine Common Open Space and Lot Size Variations**
110.408.35	**Roads**
110.408.40	**Parking**
110.408.45	**Conditions of Approval**

Section 110.408.00 Purpose. The purpose of this article, Article 408, Common Open Space Development, is to set forth regulations to permit variation of lot size, including density transfer subdivisions, in order to preserve or provide open space, protect natural and scenic resources, achieve a more efficient use of land, minimize road building, and encourage a sense of community.

[Amended by Ord. 876, provisions eff. 7/7/93.]

Section 110.408.05 Applicability. Common open space development may be allowed in any residential land use category or any general, office or tourist commercial regulatory zone.

Section 110.408.10 Applications. If the provisions of this article are utilized, the application for a tentative subdivision map or a parcel map, as provided in Division Six, shall state that a common open space development is proposed.

Section 110.408.15 Non-Residential Uses. Non-residential uses that serve the residents of a common open space development may be allowed provided they are allowed by, and meet the requirements of, Article 302, Allowed Uses, and are designed to be an integral part of the project.

[Amended by Ord. 876, provisions eff. 7/7/93.]

Section 110.408.20 Density and Intensity.

(a) Residential. The total number of dwelling units in the proposed common open space development shall not exceed the total number of dwelling units allowed by the underlying regulatory zones(s). The gross site area may include more than one (1) parcel.

(b) Non-Residential. The total amount of non-residential space shall not exceed the amount of space allowed by Article 106, Regulatory Zones, or Article 402,

Density/Intensity Standards. The amount of non-residential space may be further restricted if the Planning Commission finds that such restriction is necessary to preserve the primary residential character of the development.

(c) General. All development shall comply with the height standards in Table 110.406.05.1, Standards.

[Amended by Ord. 876, provisions eff. 7/7/93.]

Section 110.408.25 Lot and Yard Standards. The complete common open space development must comply with the minimum lot width, front yard setbacks, side yard setbacks, and rear yard setbacks in Table 110.406.05.1, Standards, or as an alternative, typical building envelopes shall be shown on the tentative subdivision map or parcel map where these standards are proposed to be varied below the minimum standard.

[Amended by Ord. 876, provisions eff. 7/7/93.]

Section 110.408.30 Site Analysis to Determine Common Open Space and Lot Size Variations. A site analysis showing development opportunities and constraints shall be prepared as a key consideration, along with the project design objectives, to determine the total area covered by lots and roads, lot areas, and the total area to be designated as common open space. The site analysis shall include information and maps, including a site opportunities and constraints map, describing all significant physical and contextual features or factors which may affect the development of the property. The elements of the site analysis shall include, as a minimum, the following information:

(a) Location Map. A general location map providing the context of location and vicinity of the site.

(b) Land Use. Current and planned land use on the site and adjacent current, planned and approved, but unbuilt land uses.

(c) Existing Structures. A description of the location, physical characteristics, condition and proposed use of any existing structures.

(d) Existing Vegetation. A description of existing vegetation, including limits of coverage, and major tree sizes and types. In the instance of heavily wooded sites, typical tree sizes, types and limits of tree coverage may be substituted.

(e) Prevailing Winds. An analysis of prevailing winds.

(f) Topography. An analysis of slopes on the site using a contour interval of five (5) feet, or at a contour interval appropriate for the site and agreed to by the Director of Community Development.

(g) Soil. An analysis of the soil characteristics of the site using Soil Conservation Service (SCS) information.

(h) Natural Drainageways. Identification of natural drainageways on and adjacent to the site.

(i) Wetlands and Water Bodies. Identification of existing or potential wetlands and water bodies on the site.

(j) Flood Hazards. Identification of existing and potential flood hazards using Federal Emergency Management Agency (FEMA) information.

(k) Seismic Hazards. Identification of seismic hazards on or near the site, including location of any Halocene faults.

(l) Avalanche Hazards. An analysis of avalanche and other landslide hazards.

(m) Sensitive Habitat and Migration Routes. An analysis of sensitive habitat areas and migration routes.

(n) Significant Views. A description and analysis of all on and off site significant views.

(o) Easements. A description of the type and location of any easements on the site.

(p) Utilities. A description of existing or available utilities, and an analysis of appropriate locations for water, power, sanitary sewer and storm water sewer facilities.

(q) Appropriate Access Points. An analysis of appropriate access points based upon existing and proposed streets and highways and site opportunities and constraints.

(r) Other Information. All other information deemed appropriate and necessary by the Director of Community Development.

Section 110.408.35 Roads. To the extent possible, common roads and driveways shall be used for access. The roads shall be aligned to follow natural features and topography where possible.

Section 110.408.40 Parking. The parking requirements of Article 410, Parking and Loading, shall apply.

[Amended by Ord. 876, provisions eff. 7/7/93.]

Section 110.408.45 Conditions of Approval. Provisions for the common open space development shall be conditioned upon approval of the tentative subdivision or parcel map.

(a) Three-Year Maintenance Plan. Provisions shall be made to monitor and maintain, for a period of three (3) years regardless of ownership, a maintenance plan for the common open space area. The maintenance plan for the common open space area shall, as a minimum, address the following:

(1) Vegetation management;

(2) Watershed management;

(3) Debris and litter removal;

(4) Fire access and suppression;

(5) Maintenance of public access and/or maintenance of limitations to public access; and

(6) Other factors deemed necessary by the Planning Commission or the Board of County Commissioners.

(b) Permanent Preservation and Maintenance. Provisions shall be made for the permanent preservation and ongoing maintenance of the common open space and other common areas using a legal instrument acceptable to the County.

(c) Screening and Buffering of Adjoining Development. Provisions shall be made to assure adequate screening and buffering of existing and potential developments adjoining the proposed common open space development.

(d) Common Open Space Restrictions. Designated common open space shall not include areas devoted to public or private vehicular streets or any land which has been, or is to be, conveyed to a public agency via a purchase agreement for such uses as parks, schools or other public facilities.

[Amended by Ord. 876, provisions eff. 7/7/93.]

Article 410
PARKING AND LOADING

Sections:

110.410.00	**Purpose**
110.410.05	**Applicability of Article**
110.410.10	**Required Parking Spaces**
110.410.15	**Special Parking Provisions**
110.410.20	**Location of Required Parking Spaces**
110.410.25	**Design of Parking Areas**
110.410.30	**Truck Parking and Loading**
110.410.35	**Modification of Standards**

Section 110.410.00 Purpose. The purpose of this article, Article 410, Parking and Loading, is to regulate parking and loading in order to lessen traffic congestion and contribute to public safety by providing sufficient on-site areas for the maneuvering and parking of motor vehicles that are attracted to and generated by land uses within the County.

Section 110.410.05 Applicability of Article. The provisions of this article shall apply whenever:

(a) A new structure is constructed;

(b) An existing structure, including a legal nonconforming structure, is enlarged for any purpose, the parking and loading requirements for the entire structure shall apply; or

(c) The intensity of use, or expansion of use is changed, the parking and loading requirements for the new use shall apply.

[Amended by Ord. 876, provisions eff. 7/7/93.]

Section 110.410.10 Required Parking Spaces. Off-street parking spaces shall be provided in the quantities set forth in Table 110.410.10.1 through Table 110.410.10.5.

(a) Description of Use Types. The use types referred to in Table 110.410.10.1 through Table 110.410.10.5 are defined in Article 304, Use Classification System.

(b) Requirements Cumulative. Where Table 110.410.10.1 through Table 110.410.10.5 set forth more than one (1) requirement for a given use type, those requirements shall be cumulative.

(c) Spaces Based on Square Footage. The square footage requirements used in Table 110.410.10.1 through Table 110.410.10.5 to calculate parking spaces refer to the total enclosed areas of all buildings on the lot, but excludes the area of spaces having a height of less than seven (7) feet and the area used exclusively for parking and loading.

(d) Spaces Based on Employees. The employee requirements used in Table 110.410.10.1 through Table 110.410.10.5 to calculate parking spaces refer to the maximum number of employees who could be working at one time when the facility is operating at full capacity.

(e) Rounding Off Numbers. Whenever the computation of the number of off-street parking spaces required by Table 110.410.10.1 through Table 110.410.10.5 results in a fractional parking space, one (1) additional parking space shall be required for a fractional space of one-half (1/2) or more. A fractional space of less than one-half (1/2) shall not be counted.

Table 110.410.10.1

OFF-STREET PARKING SPACE REQUIREMENTS (Residential Use Types)
(See Section 110.410.10 for explanation)

Residential Use Types (Section 110.304.15)	**Spaces Required**
Family Residential	
Attached Accessory Dwelling	1 per attached accessory dwelling unit, in addition to other required spaces
Detached Accessory Dwelling	1 per detached accessory dwelling unit, in addition to other required spaces
Detached Accessory Structure	None
Duplex	2 per dwelling unit, 1 of which must be in an enclosed garage
Fabricated Home	*2 per fabricated home
Multi Family	1.6 for 1 bedroom units, 2.1 for 2 bedroom and larger units; 1 of which must be in an enclosed garage or carport
Single Family Attached	2 per dwelling unit, 1 of which must be in an enclosed garage
Single Family Detached	2 per dwelling unit, 1 of which must be in an enclosed garage
Manufactured Home Parks	1.5 per manufactured home, plus 1 per 5 units for guest parking
Group Home	.25 per bed, plus 1 per employee during peak employment shift

Note: * = Article 312, Fabricated Housing, may require 1 parking space to be in an enclosed garage or carport.

Table 110.410.10.2

OFF-STREET PARKING SPACE REQUIREMENTS (Civic Use Types)
(See Section 110.410.10 for explanation)

Civic Use Types (Section 110.304.20)	**Spaces Required**		
	Per 1,000 Square Feet Building Space	**Per Employee During Peak Employment Shift**	**Other**
Administrative Services	4		
Child Care			
Child Daycare	1 if assembly hall included	1	1 off-street loading space for every 8 students
Family Daycare			1 in addition to any other required spaces
Large-Family Daycare		1	1 off-street loading space for every 8 students
Community Center	5	1	
Convalescent Services		1	.25 per bed
Cultural and Library Services	3	1	
Education			
College/University		1	.5 per student of driving age
Elementary/Secondary		1	.25 per student of driving age
Group Care		1	.25 per bed
Hospital Services		1	.5 per bed
Major Services and Utilities			
Major Public Facilities		As specified by use permit	
Utility Services		As specified by use permit	
Nature Center		As specified by use permit	
Parks and Recreation			
Active Recreation		1	
Passive Recreation		1	
Postal Services	2	1	
Public Parking Services		1	
Religious Assembly			1 per 3 seats or 72 lineal inches of pew space plus 1 per 300 square feet of additional public space
Safety Services		1	

Table 110.410.10.3

OFF-STREET PARKING SPACE REQUIREMENTS (Commercial Use Types)
(See Section 110.410.10 for explanation)

Commercial Use Types (Section 110.304.25)	**Spaces Required**		
	Per 1,000 Square Feet Building Space	**Per Employee During Peak Employment Shift**	**Other**
Administrative Offices	4	1	
Adult Entertainment	5	1	
Animal Sales and Services			
Commercial Kennels		1	.25 per animal at design capacity
Commercial Stables		1	.25 per horse at design capacity
Grooming and Pet Stores	2.5	1	
Pet Cemeteries		1	
Veterinary Services, Agricultural	2	1	
Veterinary Services, Pets	4	1	
Automotive and Equipment			
Automotive Repair		1	3 per service bay
Automotive Sales and Rentals	.5	1	
Cleaning	2	1	
Commercial Parking		1	
Equipment Repair and Sales	2	1	
Fabricated Housing Sales	.5	1	
Storage of Operable Vehicles		1	
Truck Stops	4	1	
Building Maintenance Services	2		
Continuum of Care Facilities, Seniors		As specified by use permit	As specified by use permit
Commercial Antennas			1 per antenna tower
Commercial Centers (All Types)			Less than 15,000 square feet: 5 spaces per 1,000 square feet; 15,000 to 400,000 square feet: 4 spaces per 1,000 square feet; more than 400,000 square feet: 5 spaces per 1,000 square feet
Commercial Educational Services		1	.5 per student
Commercial Recreation			
Commercial Campground Facilities		1	
Destination Resorts		1	1 per room
Indoor Entertainment		1	1 per 3 seats
Indoor Sports and Recreation	5	1	
Limited Gaming Facilities	4	1	

Table 110.410.10.3 (continued)

OFF-STREET PARKING SPACE REQUIREMENTS (Commercial Use Types)
(See Section 110.410.10 for explanation)

Commercial Use Types (Section 110.304.25)	Spaces Required		
	Per 1,000 Square Feet Building Space	Per Employee During Peak Employment Shift	Other
Marinas		As specified by use permit	
Outdoor Entertainment		As specified by use permit	
Outdoor Sports and Recreation		As specified by use permit	
Outdoor Sports Club		As specified by use permit	
Unlimited Gaming Facilities	8	1	
Construction Sales and Services	2 for retail and 1 for storage area		
Convention and Meeting Facilities		1	1 per seat if not associated with lodging facilities; .5 per seat otherwise
Eating and Drinking Establishments			
Convenience	10	1	
Full Service	10	1	
Financial Services	3	1	
Funeral and Internment Services			
Cemeteries		1	
Undertaking		1	1 per 3 seats
Gasoline Sales and Service Stations		1	3 per service bay (service bay not credited as required space)
Helicopter Services			
Heliport		1	5 per helicopter space
Helistop		1	5 per helicopter space
Liquor Sales			
Off-Premises	4	1	
On-Premises	10	1	

Table 110.410.10.3 (continued)

OFF-STREET PARKING SPACE REQUIREMENTS (Commercial Use Types)
(See Section 110.410.10 for explanation)

Commercial Use Types (Section 110.304.25)	Spaces Required		
	Per 1,000 Square Feet Building Space	Per Employee During Peak Employment Shift	Other
Lodging Services			
Bed and Breakfast Inns		1	1 per room
Hostels		1	.25 per bed
Hotels and Motels		1	1 per room
Vacation Time Shares			1.6 for 1 bedroom units, 2.1 for 2 bedroom and larger units; 1 of which must be in an enclosed garage or carport
Medical Marijuana Establishment			
Medical Marijuana Cultivation Facility		1	
Facility for the Production of Edible or Infused Marijuana Products		1	
Independent Testing Laboratory		1	
Medical Marijuana Dispensary	3	1	
Medical Services	5	1	
Nursery Sales			
Retail	3	1	
Wholesale	3	1	
Personal Services	4		
Personal Storage		1	1 loading space per unit, internal access drives may be used
Professional Services	4	1	
Recycle Center			
Full Service Recycle Center	3	1	
Remote Collection Facility			3 spaces per collective device
Residential Hazardous Substance Recycle Center	3	1	
Repair Services, Consumer	2.5	1	
Retail Sales			
Comparison Shopping Centers	3	1	
Convenience	5	1	
Specialty Stores	3	1	
Secondhand Sales	2.5	1	
Transportation Services		1	

Table 110.410.10.4

OFF-STREET PARKING SPACE REQUIREMENTS (Industrial Use Types)
(See Section 110.410.10 for explanation)

Industrial Use Types (Section 110.304.30)	Spaces Required		
	Per 1,000 Square Feet Building Space	Per Employee During Peak Employment Shift	Other
Custom Manufacturing		1	2 per 1,000 square feet of showroom space
Energy Production		1	
General Industrial			
Heavy		1	
Intermediate		1	
Limited		1	
High Technology Industry		1	
Inoperable Vehicle Storage		1	2 per 1 acre of storage area
Laundry Services	2	1	
Mining Operations		1	
Petroleum Gas Extraction		1	
Salvage Yards		1	2 per 1 acre of storage area
Wholesaling, Storage and Distribution			
Heavy		1	.5 per 1,000 square feet of area open to the public
Light		1	.5 per 1,000 square feet of area open to the public

Table 110.410.10.5

OFF-STREET PARKING SPACE REQUIREMENTS (Agricultural Use Types)
(See Section 110.410.10 for explanation)

Agricultural Use Types (Section 110.304.35)	Spaces Required		
	Per 1,000 Square Feet Building Space	Per Employee During Peak Employment Shift	Other
Agricultural Processing		1	
Agricultural Sales	3	1	
Animal Production		1	
Animal Slaughtering		1	
Animal Slaughtering, Mobile		1	Off-street parking for the mobile facility
Crop Production		No requirement	
Forest Products		1	
Game Farm		1	
Produce Sales		1	3 spaces per produce stand

Sources: Sedway Cooke Associates and Washoe County Department of Community Development.

[Amended by Ord. 876, provisions eff. 7/7/93; Ord. 939, provisions eff. 11/1/95; Ord. 899, provisions eff. 5/31/94; Ord. 1041, provisions eff. 12/1/98; Ord. 1433, provisions eff. 3/5/10; Ord. 1485, provisions eff. 3/27/12; Ord. 1527, provisions eff. 4/18/14.]

Section 110.410.15 Special Parking Provisions.

(a) Motorcycle and Bicycle Spaces. For every four (4) motorcycle or six (6) bicycle parking spaces provided, a credit of one (1) parking space shall be given toward the requirements of this article, provided, however, that the credit for each shall not exceed one-fortieth (1/40) of the total number of automobile spaces required. If determined necessary by the County Engineer, bollards shall be installed to separate and protect motorcycle and bicycle spaces from automobile circulation. The minimum dimensions for motorcycle and bicycle spaces shall be as set forth in the following subsections:

(1) Motorcycle spaces shall be a minimum of seven (7) feet in length and three (3) feet four (4) inches in width as illustrated in Figure 110.410.15.1.

(2) Bicycle spaces shall be a minimum of six (6) feet in length and two (2) feet six (6) inches in width as illustrated in Figure 110.410.15.2.

(b) Bicycle Storage. In commercial and industrial projects with twenty (20) or more required parking spaces, a rack or other secure device for the purpose of storing and protecting bicycles from theft shall be installed. Such devices shall be provided with a minimum capacity of one bicycle per twenty (20) required parking

spaces and shall be located so as not to interfere with pedestrian or vehicular traffic.

(c) Handicapped Parking. In any parking facility serving the public, parking for the handicapped shall be provided as set forth in this subsection.

(1) Handicapped parking spaces shall be provided in accordance with Table 110.410.15.1. One (1) of every eight (8) required handicapped spaces shall be a van accessible space (a minimum of one (1) van accessible space per parking area).

(2) Handicapped parking spaces shall be a minimum of eight (8) feet in width and a minimum of eighteen (18) feet in length, as illustrated in Figure 110.410.15.3.

(3) Handicapped spaces shall be provided with an adjacent access aisle, as illustrated in Figure 110.410.15.3. Access aisles shall be a minimum of five (5) feet in width. Van access aisles shall be a minimum of eight (8) feet in width. Access aisles shall be located on the passenger side of each space unless it is located between and is shared by two (2) designated spaces.

(4) Handicapped parking spaces and access aisles shall be level.

(5) Handicapped spaces shall be located as near as possible to accessible building or site entrances and shall be located so as to provide convenient access to curb ramps.

(6) Each reserved handicapped parking space shall be designated with a stall sign displaying the International Symbol of Accessibility, as illustrated in Figure 110.410.15.4. Each stall sign shall be at least seventy (70) square inches in size. Spaces that are van accessible shall be designated as "Van Accessible."

(7) Each reserved handicapped parking space shall meet one (1) of the following stall markings requirements:

(i) Each handicapped parking space shall be painted solid blue with a white International Symbol of Accessibility; or

(ii) Each handicapped parking space shall be outlined in blue with a three (3) foot square International Symbol of Accessibility painted in a contrasting color.

(8) Each reserved handicapped parking space shall be marked with a sign warning drivers of the possibility of towing due to unauthorized use and providing information of recovering towed vehicles. Warning signs shall have minimum dimensions of seventeen (17) inches by twenty-two (22) inches and shall be labeled with lettering of at least one (1) inch in height.

(9) A minimum of ninety-eight (98) vertical inches of clearance shall be provided for van accessible spaces and the entire route from parking area ingress/egress points to the parking space.

(10) As illustrated in Figure 110.410.15.5, a minimum vehicle overhang allowance of twenty-four (24) inches shall be provided between accessible routes and handicapped parking spaces. Said accessible routes shall, at all times, provide users with a minimum width of thirty-six (36) inches of throughway.

Figure 110.410.15.1

MOTORCYCLE PARKING DIMENSIONS

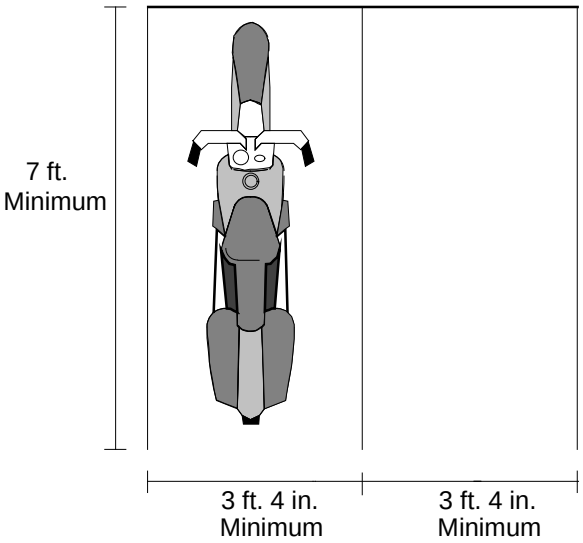

Source: Sedway Cooke Associates.

Figure 110.410.15.2

BICYCLE PARKING DIMENSIONS

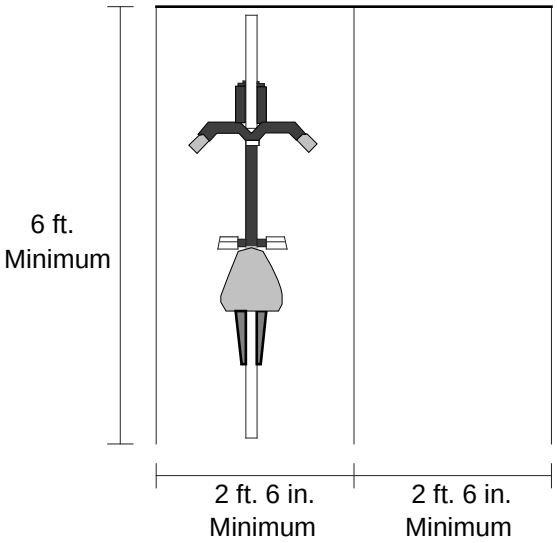

Source: Sedway Cooke Associates.

Table 110.410.15.1

HANDICAPPED ACCESSIBLE SPACES

Spaces in Lot	Required Number of Accessible Spaces
1 to 25	1
26 to 50	2
51 to 75	3
76 to 100	4
101 to 150	5
151 to 200	6
201 to 300	7
301 to 400	8
401 to 500	9
501 to 1,000	2 percent of Total
1,001 and over	20 plus 1 per 100 above 1,000

Source: Washoe County Department of Community Development.

Figure 110.410.15.3

HANDICAPPED PARKING DIMENSIONS

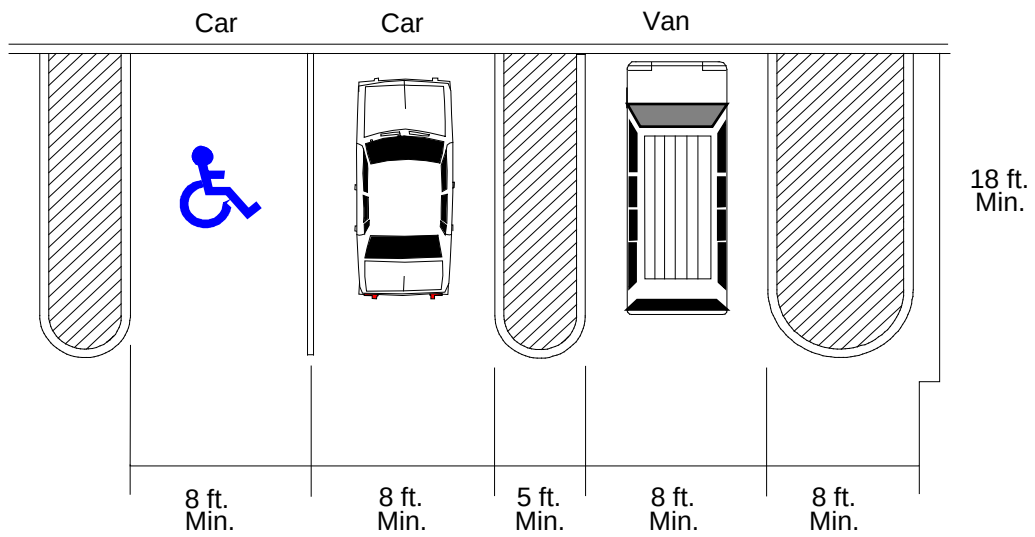

Source: Sedway Cooke Associates.

Figure 110.410.15.4

INTERNATIONAL SYMBOL OF ACCESSIBILITY

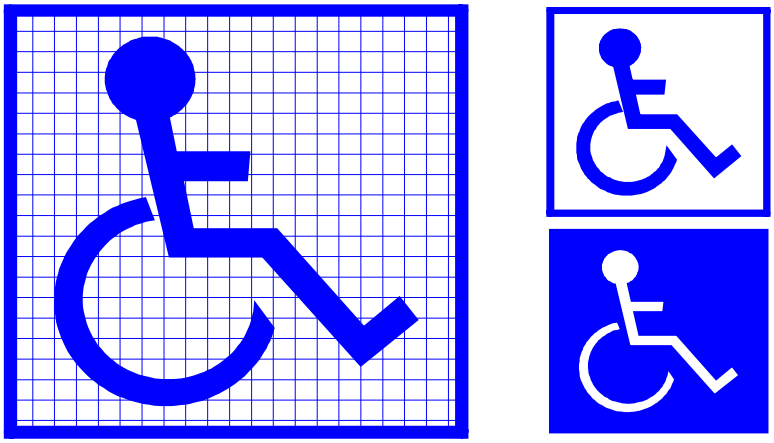

Proportions

Display Conditions

Source: Sedway Cooke Associates.

Figure 110.410.15.5

ACCESSIBLE ROUTES

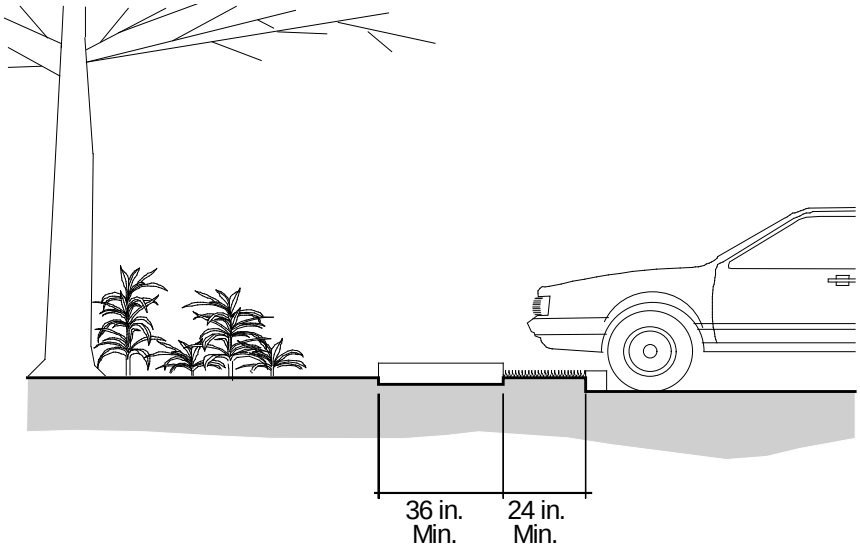

Source: Sedway Cooke Associates.

[Amended by Ord. 876, provisions eff. 7/7/93.]

Section 110.410.20 Location of Required Parking Spaces. Required parking spaces shall be located as set forth in this section.

(a) On Same or Adjacent Lot. For dwellings, motels, automobile-oriented services, and elementary, junior high, and high schools, required parking spaces shall be

provided on the same lot as the main building(s) or on an adjoining lot or lots zoned for the main use of the property.

(b) Other Uses. For uses not listed in Subsection (a) above, required parking spaces shall be located within three hundred (300) feet of the lot on which the main building is located.

(c) Adjacent and Off-site Lots. If an adjacent or off-site lot is used to satisfy the parking requirements, the lot(s) shall be secured in such a manner that will provide parking for the life of the project. This requirement does not preclude the use of reciprocal parking agreements, so long as the agreement is in a form acceptable to Washoe County.

Section 110.410.25 Design of Parking Areas. The design standards for off-street parking facilities shall be as set forth in this section.

(a) Parking Lot Design. Parking lot design and dimensions shall be in accordance with Table 110.410.25.1 and Figure 110.410.25.1.

(b) Automobile Parking Spaces: Size. Parking space sizes shall be built with an unistall design in accordance with Table 110.410.25.1 and Figure 110.410.25.1.

(c) Wheel Stops. A wheel stop or curb, if used, shall be placed between two-and-one-half (2-1/2) and three (3) feet from the end of the parking space.

(d) Striping and Marking. All parking stalls shall be striped and directional arrows shall be delineated in a manner acceptable to the County Engineer. All paint used for striping and directional arrows shall be of a type approved by the County Engineer.

(e) Surfacing. All parking spaces, driveways and maneuvering areas shall be paved and permanently maintained with asphalt or cement. Bumper guards shall be provided when necessary to protect adjacent structures or properties as determined by the Director of Community Development.

(f) Landscaping and Screening. All open parking areas shall be landscaped and/or screened according to the standards set forth in Article 412, Landscaping.

(g) Lighting. All off-street parking areas within commercially-zoned projects shall be provided with exterior lighting which meets the following minimum standards:

(1) Proper illumination shall be provided for safety which, at a minimum, shall be the equivalent of one (1) foot candle average of illumination throughout the parking area;

(2) All lighting shall be on a time clock or photo-sensor system;

(3) Parking lot luminaries shall be high-pressure sodium vapor with 90-degree cut-off and flat lenses; and

(4) All lighting shall be designed to confine direct rays to the premises. No spillover beyond the property line shall be permitted, except onto public thoroughfares provided, however, that such light shall not cause a hazard to motorists.

(h) Access. Access to parking areas shall be provided as follows:

(1) Access driveways shall have a width of no less than twenty (20) feet;

(2) The parking area shall be designed so that a vehicle within the parking area will not have to enter a public street to move from one location to any other location within the parking area; and

(3) Vehicular access to arterial streets and highways will be permitted only in accordance with driveway locations and access design to be approved by the County Engineer.

(i) Parking Aisles. The minimum dimensions for parking aisles (the space required for maneuvering vehicles within a parking lot) shall be as set forth in Table 110.410.25.1 and Figure 110.410.25.1.

Table 110.410.25.1

PARKING DIMENSIONS

A (Angle in Degrees)	C	D	L	Q	V	W	X	Y
0	12*	8.5	22	0.0	17.0	8.5	22.5	0.0
15	12*	12.6	17	4.4	32.8	8.5	16.4	2.2
30	12*	15.9	17	8.5	17.0	8.5	14.7	4.3
45	12*	18.0	17	12.0	12.0	8.5	12.0	6.0
60	16*	19.0	17	14.7	9.8	8.5	8.5	7.4
75	20	18.6	17	16.4	8.8	8.5	4.4	8.2
90	24	17.0	17	17.0	8.5	8.5	0.0	8.5

Notes: This table provides dimensions (in feet) of parking spaces and lots. The asterisk (*) indicates the minimum aisle width for two-way traffic is twenty (20) feet. The letters in the column headings refer to dimensions illustrated in Figure 110.410.25.1 and to the following: A = Angle of Parking Spaces; C = Width of Aisle; D = Depth of Stall; L = Length of Stall; Q = Interlock Length of Stall; V = Interlock Width of Stall; W = Width of Stall; X = End of Parking Stall Aisle Width; Y = Perpendicular Width of Stall; and D = W cos A + sin A; Q = L sin A; V = W/sin A; X = L cos A; and Y = Q/2.

Source: Sedway Cooke Associates.

Figure 110.410.25.1

PARKING LOT LAYOUT

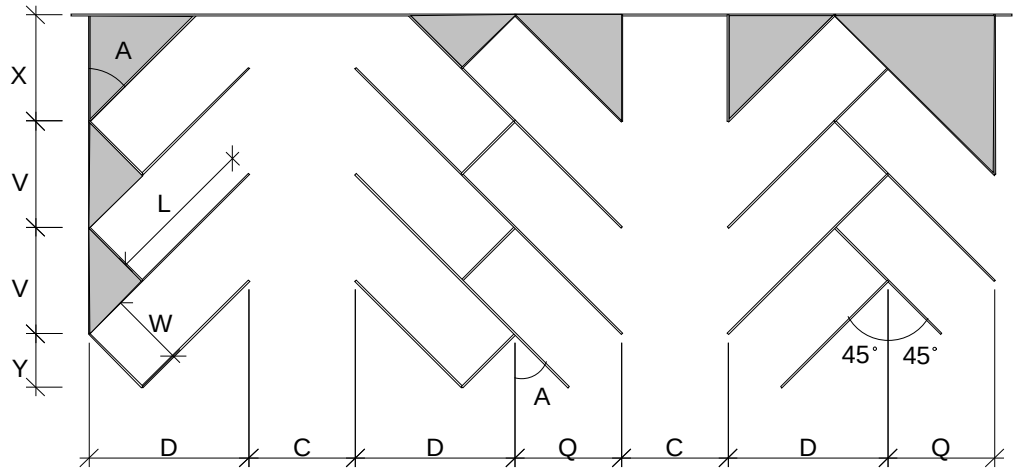

Source: Sedway Cooke Associates.

<u>Section 110.410.30 Truck Parking and Loading.</u> Parking and loading space for trucks shall be provided as set forth in this section.

(a) <u>Commercial Uses.</u> For commercial uses, a minimum of one (1) space shall be provided for every use with three thousand (3,000) or more square feet of gross floor area. Additional parking and loading space may be required based on the operating characteristics of the individual use. In such instances, the number of spaces provided shall be determined by the Director of Community Development upon the submittal of site plans and general operation plans.

(b) <u>Industrial Uses.</u> For industrial uses, spaces shall be provided as follows:

(1) One (1) space shall be required for each use having three thousand (3,000) to twenty thousand (20,000) square feet of gross floor area;

(2) Two (2) loading spaces shall be required for each use having twenty thousand (20,000) to forty thousand (40,000) square feet of gross floor area; and

(3) For each twenty thousand (20,000) square feet of gross floor area, or major fraction thereof, over forty thousand (40,000) square feet of gross floor area, one (1) loading space shall be required.

(c) <u>Design Standards.</u> Design of required spaces shall be as follows:

(1) Spaces shall be a minimum twenty-five (25) feet in length and fifteen (15) feet in width, and shall have minimum height clearance of fourteen (14) feet;

(2) Spaces shall not interfere with vehicular circulation or parking, or with pedestrian circulation; and

(3) On-site driveways and maneuvering areas may be used in lieu of one (1) of the off-street loading spaces required by this section, as long as maneuvering areas for delivery vehicles are provided.

Section 110.410.35 Modification of Standards. The requirements of this article may be modified by the Director of Community Development in cases in which, due to the unusual nature of the establishment proposed or the development proposal submitted for it, the standards set forth herein may be considered insufficient or excessive. The Director may consider the existence of special transit incentives and services, car pooling programs, and significant use of pedestrian and bicycle access. Decisions of the Director pursuant to this section may be appealed pursuant to Article 808, Administrative Permits.

Article 412
LANDSCAPING

Sections:

110.412.00	**Purpose**
110.412.05	**Applicability**
110.412.10	**Exemptions**
110.412.15	**Required Plans**
110.412.20	**Water Conservation**
110.412.25	**Existing Vegetation**
110.412.30	**Public Safety**
110.412.35	**Residential Use Types**
110.412.40	**Civic and Commercial Use Types**
110.412.45	**Industrial and Agricultural Use Types**
110.412.50	**Parking and Loading Areas**
110.412.55	**Other Screening Requirements**
110.412.60	**Planting Standards**
110.412.65	**Irrigation Standards**
110.412.70	**General Requirements**
110.412.75	**Maintenance**
110.412.80	**Guarantee of Completion**

Section 110.412.00 Purpose. The purpose of this article, Article 412, Landscaping, is to establish regulations for the development, installation and maintenance of landscaped areas within Washoe County, without inhibiting creative landscape design. The intent of these regulations is to protect the public health, safety and welfare by:

(a) Increasing compatibility between residential, commercial and industrial land uses;

(b) Enhancing the economic viability of the County and the quality of living for residents and visitors by creating an attractive appearance of development along streets and highways;

(c) Reducing heat, glare, noise, erosion, pollutants and dust by increasing the amount of vegetation;

(d) Preserving significant ecological communities, and desirable existing trees and vegetation best suited for the local microclimate; and

(e) Maximizing water conservation through established conservation principles and practices, and through proper landscape and irrigation planning, design and management.

[This Section added by Ord. 867, provisions eff. 5/27/93.]

Section 110.412.05 Applicability. The provisions set forth in this article shall apply as follows:

(a) New Development. This article applies to new development that requires permitting or review by the County.

(b) Expanding Development. This article applies to expansion of floor area of existing development, except as otherwise provided below:

(1) If the expansion is less than fifty (50) percent, this article shall apply to the developable lot area associated with the proposed expansion only and the remainder of the use or structure shall be governed by regulations in force at the time of the original approval; and

(2) If the expansion or subsequent expansions cumulatively results in a fifty (50) percent or greater increase, the entire development shall be required to comply with this article, unless the Director of Community Development waives this requirement, in whole or in part, prior to the expansion.

(c) Duplicate Ordinances. If the provisions of this article are in conflict with other ordinances or regulations, the more stringent limitation or requirement shall prevail to the extent of the conflict. The provisions of this article may be waived by the Director of Community Development for development in areas under the jurisdiction of the Tahoe Regional Planning Agency (TRPA) if the proposed landscaping and impervious surface coverage violates a TRPA Ordinance or Procedure.

(d) Review of Extenuating Circumstances. The applicant may appeal to the Director of Community Development for special review resulting from extenuating circumstances or physical conditions on the proposed project site.

[This Section added by Ord. 867, provisions eff. 5/27/93.]

Section 110.412.10 Exemptions. The following uses are exempt from the provisions of this article:

(a) Residential Use Types. The required front, side or rear yard areas of existing and new detached single family residential lots, unless front yard landscaping is required under any article found in Division Two, Area Plan Regulations, of the Washoe County Development Code.

(b) Civic Use Types. Uses classified under the parks and recreation use type are exempt, except for parking and loading areas associated with these uses.

(c) Commercial Use Types. Uses classified under the commercial recreation: outdoor sports club use type and nursery sales use type are exempt, except for parking and loading areas associated with these uses.

(d) Industrial Use Types. No uses are exempt. However, the provisions of this article may be waived during the approval process for use types classified under energy production, mining operations, and petroleum gas extraction.

(e) Agricultural Use Types. Uses classified under the animal production, crop production, forest products, game farms, and produce sales use types are exempt, except for parking and loading areas associated with these uses.

(f) Open Space Regulatory Zones. Uses classified under the Open Space regulatory zone are exempt.

[This Section added by Ord. 867, provisions eff. 5/27/93.]

Section 110.412.15 Required Plans. A site plan, planting plan and an irrigation plan are required, and a soil analysis is strongly encouraged for all non-exempt development. These plans shall be prepared by a licensed landscape architect or other persons permitted to prepare landscaping and irrigation plans pursuant to Nevada Revised Statues Chapter 623A and submitted to, and approved by, the Director of Community Development.

(a) Site Plan. A site plan is required to ensure that the proposed landscape improvements are in conformance with the standards and requirements of this article. A copy of the approved site plan shall be kept on the project site until the project is inspected and accepted by the County. A site plan, drawn at a scale appropriate to the proposed project, including dimensions and distances, shall include at a minimum:

(1) Location and configuration of proposed and existing buildings, and site improvements on a base map with existing and proposed topography; and

(2) Location and amount of proposed and existing parking spaces and other paved areas, public rights-of-way and impervious surfaces.

(b) Planting Plan. A planting plan is required to ensure that the proposed plantings are in conformance with the standards and requirements of this article. The planting plan must include all necessary information to satisfy Section 110.412.60, Planting Standards, of this article. A planting plan shall include at a minimum:

(1) Location, spacing, size, and genus and/or species of proposed plantings, and identification of existing plants;

(2) Existing vegetation, natural features and site improvements on adjoining properties within ten (10) feet of the property line; and

(3) Plant list which includes the following: quantity of proposed plants; existing plants to remain; number of proposed trees; number of existing trees to be preserved; amount of paved area; and the amount of turf.

(c) Irrigation Plan. An irrigation plan is required to ensure sufficient and timely watering necessary for the survival of newly installed plants. A copy of the approved irrigation plan shall be kept on the project site until the project is inspected and accepted by the County. The irrigation plan must include all necessary information to satisfy Section 110.412.65, Irrigation Standards, of this article. An irrigation plan, drawn at a scale identical to the required site plan, shall include at a minimum:

(1) Location, size and specifications of water source(s), water mains, meter(s), valves and the controller;

(2) Temporary or permanent water irrigation systems;

(3) Specifications of irrigation equipment identified by manufacturer's name and equipment identification number; and

(4) An approved backflow prevention device is required on all landscape irrigation systems.

(d) Soil Analysis. A horticultural suitability analysis with appropriate recommendations is strongly encouraged to assist in proper selection of plant materials and soil amendment as necessary to enhance the health and growing capabilities of the plants.

[This Section added by Ord. 867, provisions eff. 5/27/93.]

Section 110.412.20 Water Conservation. To promote resource-efficient landscaping for the conservation of water and other natural resources, the following principles and practices are encouraged:

(a) Practical turf areas;

(b) The use of water-conserving plant material;

(c) The grouping of plants with similar water requirements;

(d) An irrigation system designed to meet plant needs;

(e) The installation of permeable hard surfaces to encourage groundwater recharge and re-use, and to discourage run-off;

(f) The use of water harvesting techniques;

(g) The use of mulches;

(h) The use of soil amendments based on soil analysis; and

(i) The use of reclaimed water. When reclaimed water is available and when a distribution master plan indicating the availability of reclaimed water in the future has been adopted by either the County or a special district, the applicant shall incorporate the use of reclaimed water into the project design, except in the vicinity of any location where food is served or consumed.

[This Section added by Ord. 867, provisions eff. 5/27/93.]

Section 110.412.25 Existing Vegetation. Existing vegetation within the total developed land area, as generally depicted in Figure 110.412.25.1, shall be preserved as set forth in this section and may contribute toward all landscaping required by this article, including:

(a) Existing Vegetation. Existing vegetation and ecological communities shall be protected and preserved where appropriate and as feasible;

(b) Preservation of Protected and Endangered Vegetation. Protected and endangered vegetation as defined in the Conservation Element of the Washoe County Master Plan; and

(c) Preservation of Significant Trees. Existing trees with a caliper greater than six (6) inches, as measured fifty-four (54) inches from grade, shall be preserved if feasible. Protection measures, including non-disturbance around the drip-line and/or root zone, shall be incorporated into the landscaping plan.

Figure 110.412.25.1

TOTAL DEVELOPED LAND AREA

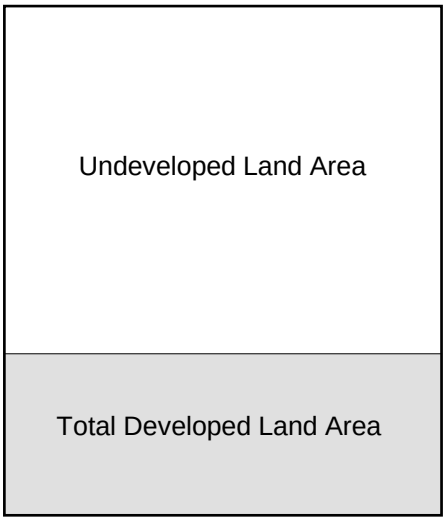

Note: Area used in calculating the amount of required landscaping and

Source: Sedway Cooke Associates.

[This Section added by Ord. 867, provisions eff. 5/27/93; Ord. 1447, provisions eff. 9/9/10.]

Section 110.412.30 Public Safety. All provisions of this article shall comply with the public safety requirements set forth in this section.

(a) General. Landscaping shall meet the following safety requirements:

(1) Landscaping elements shall not be permitted if they pose a public health or safety threat; and

(2) The height, spread and growth habit of all plants shall not interfere with or obstruct ease of movement or impede a public right-of-way.

(b) Special Areas. The use of thorny plants is prohibited along public bicycle and pedestrian paths, and the use of poisonous and/or thorny plants is prohibited on properties used primarily by children such as schools, day care centers and nurseries.

(c) Intersection Visibility. As illustrated in Figure 110.412.30.1, all trees shall be pruned such that no branches extend lower than six (6) feet above curb level and other plants shall not exceed eighteen (18) inches in height above any street curb under the following conditions:

(1) Street Intersection: Within a thirty (30) foot visibility triangle.

(2) Commercial Driveway or Alleyway: Within a fifteen (15) foot visibility triangle.

(3) Residential Driveway: Within a ten (10) foot visibility triangle.

Figure 110.412.30.1

INTERSECTION VISIBILITY

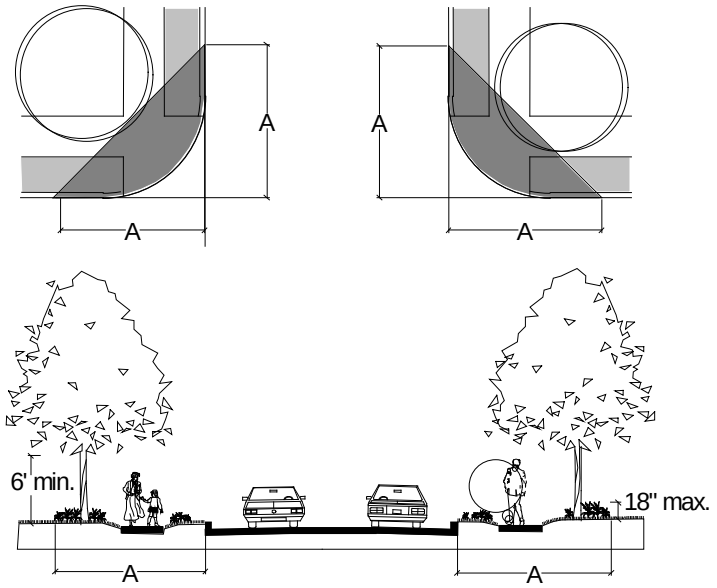

Note: A = Distance measured from street curb as set forth in Section 110.412.30 (c)(1), (c)(2), and (c)(3).

Source: Sedway Cooke Associates.

[This Section added by Ord. 867, provisions eff. 5/27/93.]

Section 110.412.35 Residential Use Types. The following landscaping requirements shall apply to residential uses including duplex and multiplex residential subdivision lots and multi-family developments, except those exempted by Section 110.412.10, Exemptions. Any landscaping required in this section may contribute toward the minimum requirements.

(a) Coverage. A minimum twenty (20) percent of the total developed land area shall be landscaped.

(b) Required Yards Adjoining Streets. All required front, rear or side yards which adjoin a public street shall be landscaped and shall include at least one (1) tree for every fifty (50) linear feet of street frontage, or fraction thereof.

(c) Subdivision Perimeters. New residential subdivisions, regardless of the number of dwelling units per parcel, shall provide at least one (1) tree for every fifty (50) linear feet of perimeter frontage adjoining an arterial or collector identified in the Washoe County Master Plan Streets and Highways System Plan map.

(d) Model Homes. Model homes for all residential subdivisions shall install landscaping that demonstrates appropriate landscape techniques suitable for the local micro-climate and soil conditions.

[This Section added by Ord. 867, provisions eff. 5/27/93; Ord. 1447, provisions eff. 9/9/10.]

Section 110.412.40 Civic and Commercial Use Types. The following minimum landscaping requirements shall apply to the total developed land area for civic and commercial uses, except those exempted by Section 110.412.10, Exemptions. The total developed land area is illustrated in Figure 110.412.25.1. Any landscaping required in this section may contribute toward the minimum requirements, including a mixture of building and buffer landscaping. These requirements are generally depicted in Figure 110.412.40.1.

(a) Coverage. A minimum twenty (20) percent of the total developed land area shall be landscaped. Any disturbance to undeveloped portions of a site shall be mitigated.

(b) Required Yards Adjoining Streets. All required yards which adjoin a public street shall be landscaped and shall include at least one (1) tree for every fifty (50) linear feet of street frontage, or fraction thereof.

(c) Landscaped Buffers Adjoining Residential Uses. When a civic or commercial use adjoins a residential use, a landscaped buffer is required as follows:

(1) The buffer shall be the width of the required front, side or rear yard for the entire length of the adjoining common property line; and

(2) The buffer shall include at least one (1) tree every twenty (20) linear feet of property frontage, or fraction thereof, planted in off-set rows or groupings to achieve maximum screening.

(d) Screening Adjoining Residential Uses. When a civic or commercial use adjoins a residential use, a solid decorative wall or fence shall be erected along the entire length of the common property line. This wall or fence shall be at least six (6) feet but not more than seven (7) feet in height.

Figure 110.412.40.1

LANDSCAPING AND SCREENING FOR CIVIC, COMMERCIAL, INDUSTRIAL AND AGRICULTURAL USE TYPES

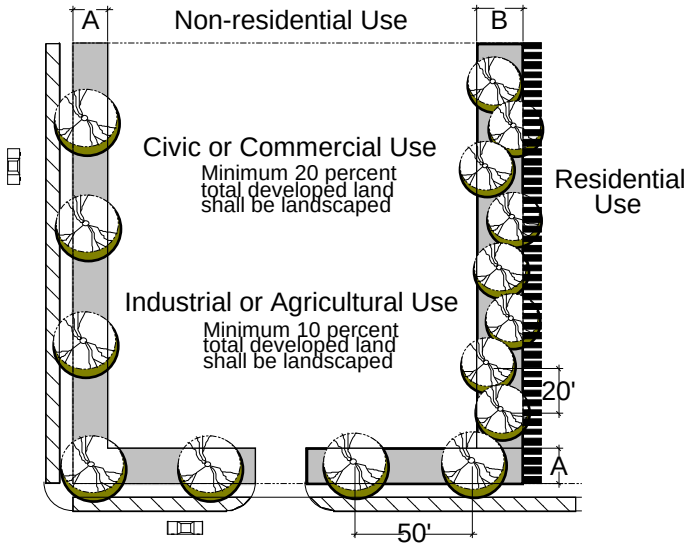

Notes: A = Landscaping in required yard adjoining a street.
B = Landscaped buffer adjoining a residential use.
▮▮▮▮ = Screening adjoining a residential use.

Source: Sedway Cooke Associates.

[This Section added by Ord. 867, provisions eff. 5/27/93.]

Section 110.412.45 Industrial and Agricultural Use Types. The following minimum landscaping requirements shall apply to the total developed land area for industrial and agricultural uses, except those exempted by Section 110.412.10, Exemptions. The total developed land area is illustrated in Figure 110.412.25.1. Any landscaping required in this section may contribute toward the minimum requirements, including a mixture of building and buffer landscaping. These requirements are generally depicted in Figure 110.412.40.1.

(a) Coverage. A minimum ten (10) percent of the total developed land area shall be landscaped. Any disturbance to undeveloped portions of a site shall be mitigated.

(b) Required Yards Adjoining Streets. All required yards which adjoin a street shall be landscaped and shall include at least one (1) tree for every fifty (50) linear feet, or fraction thereof.

(c) Landscaped Buffers Adjoining Residential Uses. When an industrial or agricultural use adjoins a residential use, a landscaped buffer is required as follows:

(1) The buffer shall be the width of the required yard for the entire length of the adjoining common property line; and

(2) The buffer shall include at least one (1) tree every twenty (20) linear feet of property frontage, or fraction thereof, planted in off-set rows or other methods to achieve maximum buffering.

(d) Screening Adjoining Residential Uses. When any industrial or agricultural use adjoins a residential use, a solid decorative wall or solid decorative fence shall be erected along the entire length of the common property line. This wall or fence shall be at least six (6) feet but not more than seven (7) feet in height.

[This Section added by Ord. 867, provisions eff. 5/27/93.]

Section 110.412.50 Parking and Loading Areas. In addition to other required landscaping, all parking and loading areas shall provide minimum landscaping as set forth in this section. Any trees required in Sections 110.412.35 through 110.412.45 may contribute toward the minimum coverage requirement.

(a) Coverage. At least one (1) tree shall be provided for every ten (10) parking spaces, provided the distance between required trees does not exceed twelve (12) spaces in a row and the trees are evenly distributed throughout the paved area, as generally depicted in Figure 110.412.50.1.

(b) Required Yards Adjoining Streets. When a parking or loading area adjoins a street, a landscaped berm and/or decorative wall or fence shall be provided within all required yards adjacent to the parking or loading area, not to exceed three (3) feet.

(c) Landscaped Buffers Adjoining Residential Uses. As generally depicted in Figure 110.412.50.2, when a parking or loading area adjoins a residential use, a landscaped buffer is required as follows:

(1) The buffer shall be the width of the required yard for the entire length of the adjoining common property line; and

(2) The buffer shall include at least one (1) tree every twenty (20) linear feet, or fraction thereof, planted in off-set rows.

(d) Screening Adjoining Residential Uses. As generally depicted in Figure 110.412.50.2, when a parking or loading area adjoins a rear or non-street side yard of a residential use, a solid decorative wall or fence shall be erected along the entire length of the property line. This wall or fence shall be at least six (6) feet but not more than seven (7) feet in height.

(e) Existing Parking and Loading Areas. When a parking or loading area existing prior to the effective date of this article is enlarged by one or more expansions in area greater than fifty (50) percent, the minimum landscaping requirements of this article shall be met for the total (existing and enlarged) area.

(f) Standards. The following standards shall apply within parking and loading areas:

(1) Planted areas shall be protected by curb, wheel stops or other appropriate means, to prevent injury to plants from pedestrian or vehicle traffic; and

(2) Planting areas which abut the side of parking stalls shall include a minimum eighteen (18) inch wide paved strip to allow access to and from vehicles.

(g) Exceptions. Required landscaping shall not apply where parking and loading areas are:

(1) Completely screened from surrounding properties by intervening buildings or structures;

(2) Located under, on or within buildings; or

(3) Devoted to display parking for automobile dealerships.

Figure 110.412.50.1

REQUIRED TREES WITHIN PARKING AND LOADING AREAS

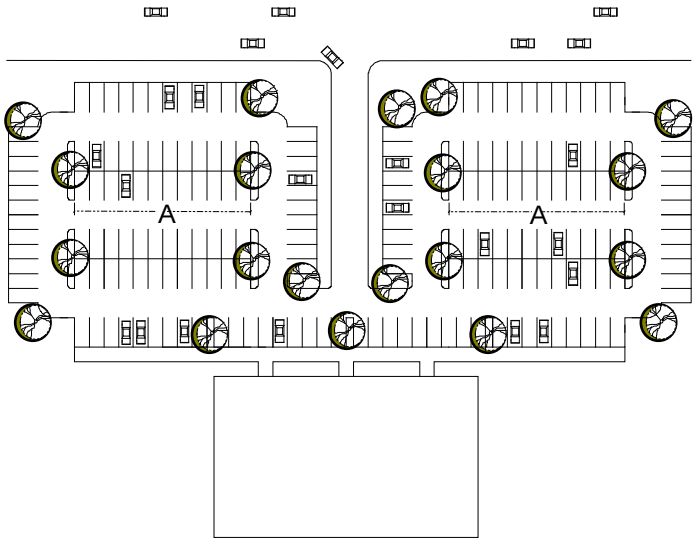

Notes: A = Maximum 12 parking spaces between trees.
Provide at least one tree for every 10 parking spaces (i.e. if 200 parking spaces are provided, then 20 trees are required.

Source: Sedway Cooke Associates.

Figure 110.412.50.2

LANDSCAPING AND SCREENING FOR PARKING AND LOADING AREAS

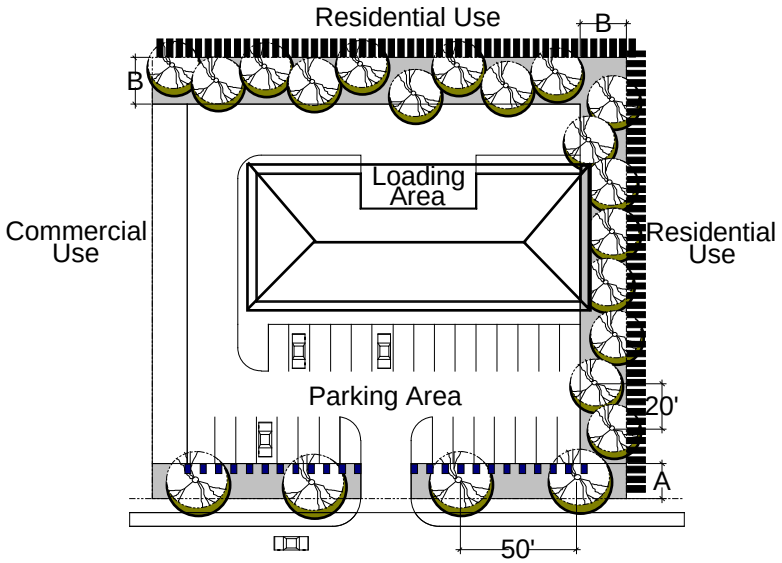

Notes:
A = Landscaping in required yard adjoining a street.
B = Landscaped buffer adjoining a residential use.
▮▮▮▮▮▮▮▮ = Screening adjoining a residential use.
▪ ▪ ▪ ▪ ▪ = Screening of a parking area adjoining a street.

Source: Sedway Cooke Associates.

[This Section added by Ord. 867, provisions eff. 5/27/93.]

Section 110.412.55 Other Screening Requirements. In addition to screening requirements established in Sections 110.412.35 through 110.412.50, screens shall comply with the minimum requirements of this section.

(a) Open Storage Areas. The following screens are required for open storage areas:

(1) Open storage areas shall be enclosed by a screen at least six (6) feet but not more than seven (7) feet in height;

(2) Items stored within one hundred (100) feet of a street or residential use shall not be stacked higher than the required screen;

(3) Screens to enclose storage areas between adjoining side or rear yards may be deleted by mutual agreement of the property owners involved;

(4) Exterior electrical cage enclosures and storage tanks shall be screened from view from an adjacent street and residential use; and

(5) The location of trash enclosures, as specified on the site plan, shall be subject to the approval of the Director of Community Development. Such enclosures and gates shall be of solid construction and shall be in accordance with County standards and the *Uniform Fire Code*.

(b) Manufactured Home Parks. A decorative wall or fence shall be erected along the entire length of the property line of a manufactured home park as follows:

(1) The wall or fence shall be at least six (6) feet but not more than seven (7) feet in height along property lines not adjoining a street.

(c) Commercial Campground Facilities. In Tourist Commercial designated areas, a decorative wall or fence shall be erected along the entire length of the property line of commercial campground facilities and recreational vehicle parks as follows:

(1) When a recreational vehicle park adjoins a street, the wall or fence shall be four (4) feet or more in height; and

(2) The wall or fence shall be at least six (6) feet but not more than seven (7) feet in height along property lines not adjoining a street.

(d) Mechanical Equipment. All mechanical equipment, tanks, ventilating fans or similar equipment, whether located on a roof or on the ground, shall be screened from view from adjoining properties and streets. Screens shall be integrated into the overall architectural style of the associated building and shall be measured from the highest point of the object being screened.

(e) Swimming Pools. Barriers shall be erected for swimming pools, spas and hot tubs in accordance with the current edition of the adopted Washoe County Building Code as referenced in Chapter 100.

(f) Materials. Screens shall include the installation and maintenance of at least one (1) or a combination of the following elements:

(1) Dense plants, such as hedges;

(2) Chain link fencing, except along streets, with inserts of wood, metal or other acceptable material;

(3) Decorative fences constructed to maintain an opaque condition. Alternating slats are encouraged to accommodate windy extremes; or

(4) Decorative walls consisting of either brick, rock or block, and maintaining a width of at least eight (8) inches.

(g) Opaqueness. Plants used for screens shall be:

(1) Of a type which will provide a year-round barrier at the prescribed height;

(2) Planted at a spacing necessary to achieve one hundred (100) percent opacity within five (5) years; and

(3) Supplemented or replaced with other dense landscaping or an appropriate fence of wall, if it fails to retain such opaqueness any time after the initial two (2) year period.

(h) Height Measurements. Screening materials shall be located to maximize the benefit of the screen, and prescribed heights shall be measured from finished grade, as illustrated in Figure 110.412.55.1.

Figure 110.412.55.1

PLACEMENT AND MEASUREMENT TECHNIQUES FOR SCREENING MATERIAL

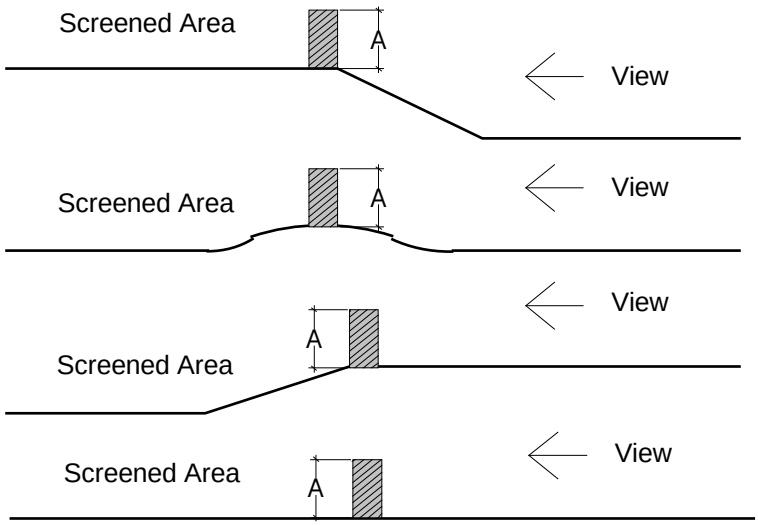

Note: A = Screen height measured from finished grade.

Source: Sedway Cooke Associates.

[This Section added by Ord. 867, provisions eff. 5/27/93; Ord. 1178, provisions eff. 12/6/02.]

Section 110.412.60 Planting Standards. All required landscaping, including parking and loading areas, shall comply with the minimum standards established in this section.

(a) Composition. The use of climatic adaptive planting material is encouraged. A suggested climatic adaptive plant list is available from the Washoe County Cooperative Extension, or any other sources approved by the Director of Community Development.

(b) Compatibility. Development shall relate harmoniously to the surrounding topography and provide for the preservation of natural features such as water courses, wooded areas and rough terrain.

(c) Compatible Water Use Zones. Trees and plants having similar climatic, water, soil and maintenance requirements shall be organized in distinct and compatible planting zones as defined below:

(1) High water use zones include plants which require moist soils and supplemental water in addition to natural rainfall to survive at maturity;

(2) Moderate water use zones include plants which survive on natural rainfall with supplemental water during seasonal dry periods at maturity; and

(3) Low water use zones include plants which survive on natural rainfall without supplemental water at maturity.

(d) Nursery Standards. Plants shall meet the standards for sizes and grades of plant materials as listed in the latest edition of the American Standard for Nursery Stock released by the American Association of Nurserymen.

(e) Non-Interference. The location of trees and vegetation shall not adversely affect utility easements, service lines or solar access of neighboring sites. If necessary, the width of the planting areas shall be increased so that the tree locations do not interfere with utilities or solar access.

(f) Public Rights-of-Way. Any tree planted within five (5) feet of publicly maintained curbing, pavement or sidewalks shall install a root control barrier as prescribed by the County. Landscaping for a private development may be placed in a public right-of-way subject to the issuance of a valid encroachment permit.

(g) General. The following general standards shall apply to all new planting areas:

(1) Planting areas with trees within parking and loading areas shall be at least eight (8) feet wide at the base of the tree in all directions;

(2) Planting areas without trees within parking and loading areas shall be at least five (5) feet wide;

(3) Ground cover or mulch shall be used in all planting areas. Turf is not allowed in parking lot tree planters; and

(4) Planted areas shall be protected by curb, wheel stops or other appropriate means to prevent injury to plants from pedestrian or vehicle traffic.

(h) Trees. New trees shall meet the following standards:

(1) The composition of trees shall represent a mixture of deciduous and coniferous varieties;

(2) At least one-half (1/2) of all evergreen trees shall be at least seven (7) feet in height, and the remainder must be at least five (5) feet in height at the time of planting; and

(3) At least one-half (1/2) of the required number of the deciduous trees shall be at least two (2) inch caliper per American Nursery Standards at the time of planting. The remaining number of required deciduous trees shall be at least one (1) inch caliper at the time of planting.

(i) Shrubs and Hedges. New shrubs and hedges shall meet the following standards:

(1) Shrubs shall be comprised of a mixture of sizes, but not less than number one (1) size containers.

(j) Ground Cover. New ground cover shall meet the following standards:

(1) Living ground cover shall be planted to achieve a minimum planting area coverage of fifty (50) percent within one (1) year of installation and shall achieve one hundred (100) percent coverage within three (3) years of installation;

(2) Wood chips, bark, decorative rock or other appropriate inert materials may also be used provided it does not exceed fifty (50) percent of the total planting area; and

(3) Plastic, steel or other appropriate edging material shall be provided around ground cover areas to retain loose materials.

(k) Turf. Turf, when used appropriately, offers aesthetic appeal, environmental cooling, oxygen production and a safe activity surface for a variety of recreational uses. Areas with turf shall meet the following standards:

(1) Irrigation for turf areas shall minimize runoff and inadvertent watering of non-turf areas;

(2) Use of turf shall be consolidated to those areas that receive significant pedestrian traffic, provide for recreational uses, assist in soil erosion control such as on slopes or in swales, and other functional use areas;

(3) Turf areas shall be dethatched and aerated as needed to promote effective water infiltration into the soil, to minimize water runoff and to promote deep, healthy roots;

(4) In multi-family residential use types, turf areas shall be provided at a minimum of fifty (50) percent of the required landscaping area in a practical configuration for recreational uses and shall be balanced with other landscaping materials;

(5) In commercial and industrial use types, turf areas shall be balanced with other landscaping materials;

(6) Turf shall be comprised of drought-resistant and hardy varieties which, when properly installed and maintained, are capable of surviving under conditions of restricted water use;

(7) Any turf area must be capable of being watered with minimum overspray or runoff; and

(8) Where turf is used in areas subject to erosion or in swales, it shall be sodded rather than seeded.

(l) Earth Berms. Earth berms shall comply with the following standards:

(1) An earth berm may contribute toward the prescribed height of any planting, fencing or wall;

(2) Mounds of earth used for planting shall not exceed horizontal to vertical slopes of two to one (2:1); and

(3) Turf planted slopes shall not exceed horizontal to vertical slopes of four to one (4:1).

(m) Soil Preparation. Soil shall comply with the following standards:

(1) Required landscaping shall be installed using a planting soil mix comprised of a type appropriate to the individual proposed plants and the native soil found on the site;

(2) Where necessary, soil amendments such as manure, straw, peat moss or compost shall be used to improve water drainage, moisture penetration and water holding capacity as recommended in the soil analysis report pursuant to Section 110.412.15, Required Plans; and

(3) Deep ripping and tilling of landscape areas is encouraged to facilitate deep water penetration and soil oxygenation.

(n) Mulch. Permanent mulch shall be applied to and maintained in all planting areas to assist soils in retaining moisture, reducing weed growth and minimizing erosion as follows:

(1) A minimum three (3) inch layer of organic mulch material shall be installed in all planting areas except turf areas and meadow planted areas;

(2) Mulch may consist of wood products, stone and other non-toxic recyclable materials;

(3) Non-porous materials, such as plastic sheets, shall not be placed under the mulch; and

(4) The use of woven types of geofabric weed barriers is required in all planter areas not devoted to turf or meadow planted areas.

(o) Height Measurements. Prescribed heights shall be measured from finished grade at the base of the plant material.

[This Section added by Ord. 867, provisions eff. 5/27/93.]

Section 110.412.65 Irrigation Standards. Required irrigation shall comply with the minimum standards established in this section.

(a) Separate Water Meter. All irrigation systems required for landscaping of all non-exempt development shall be connected to a water meter installed on the main line of the irrigation system upstream of the control valves to measure water delivery separate from water delivered for other forms of interior or exterior consumptive use.

(b) Compatible Water Use Zones. Irrigation systems shall be designed to correlate with the composition of trees and plants and their related water use. High water use zones shall be provided with central automatic irrigation systems.

(c) Coverage Requirements. Coverage requirements apply to all temporary and permanent irrigation systems as follows:

(1) Spray irrigation systems shall be designed for head-to-head coverage;

(2) Sprinkler heads must have matched precipitation rates within each control valve circuit; and

(3) Drip systems shall be designed to be expandable to adequately water the mature plants.

(d) Control Systems. The following requirements apply to all irrigation control systems:

(1) Controlled irrigation systems shall be operated by an irrigation controller capable of irrigating high water demand areas on a different schedule from low water demand areas;

(2) Controllers must have multiple cycle start capacity and a flexible calendar program above to be set to comply with local or water management district restrictions; and

(3) Moisture sensor and/or rain shut-off equipment is encouraged to avoid irrigation during periods of sufficient rainfall. Such equipment shall have the capability to override the irrigation cycle of the sprinkler system when adequate rainfall has occurred.

(e) Cross Connection Devices. All non-exempt development shall have either a pressure vacuum breaker or a reduced pressure principle backflow preventer device installed on the main line of the irrigation system upstream of the control valves.

(f) Size of Irrigation Lines. Irrigation lines shall be classified as follows:

(1) Schedule 40 P.V.C. is required for all pressure lines and as sleeving under all paved areas;

(2) Lateral line piping shall be installed at least twelve (12) inches underground for non-pressurized irrigation lines;

(3) Mainline piping shall be installed at least eighteen (18) inches underground for constant pressure irrigation lines; and

(4) Manual and automatic drains shall be used to prevent freeze damage.

(g) Water Application Schedules. Irrigation system schedules should include the following standards:

(1) Turf shall be irrigated on separate irrigation schedules; and

(2) Sprinkler systems with spray heads should not operate during times of high wind or high temperatures.

(h) Maintenance. Irrigation systems shall be maintained as follows:

(1) Irrigation systems shall be maintained regularly to eliminate the waste of water due to loss from damaged, missing or improperly operating portions of the system;

(2) Controllers shall be adjusted to allow for the seasonal water requirements of the plants; and

(3) Systems shall be winterized to prevent freeze damage, including draining lines and backflow prevention devices as necessary.

[This Section added by Ord. 867, provisions eff. 5/27/93.]

Section 110.412.70 General Requirements. All landscaping and screening shall meet the general requirements of this section.

(a) Bonding Value. Landscaping, irrigation and screening shall be completely installed prior to issuance of a Certificate of Occupancy unless the applicant posts a bond of three (3) dollars per square foot of landscaping at base year value of 1993, or other appropriate financial assurances.

(b) Deferrals. Request for deferrals shall be submitted in writing to the Director of Community Development and shall include the bond amount or other appropriate financial assurances. The request must explain the need for such deferral and the estimated time for completion.

(c) Dust Control. The following dust control measures shall be used:

(1) For temporary coverage to control dust for less than one (1) year: hydroseed with fast-growing temporary grasses; apply mulch or weed prevention netting; apply other slope stabilization materials; and install temporary irrigation system, if required, subject to the approval of the Director of Community Development; and

(2) For coverage to control dust for more than one (1) year: land clearing shall be minimized and permanent planting as required by this article shall apply.

(d) Erosion Control. Erosion shall be controlled by slowing stormwater runoff and assisting in groundwater recharge as follows:

(1) To minimize erosion during construction, straw or other appropriate material shall be applied to slopes susceptible to water runoff; and

(2) Erosion shall be controlled on all graded sites which remain vacant prior to building construction.

(e) Stormwater Runoff. Stormwater runoff shall be minimized in landscaped areas as follows:

(1) Stormwater detention/retention basins not integrated with paved areas shall be landscaped to enhance the natural configuration of the basin and plants located within the lower one-third (1/3) portion of the basin must withstand periodic submersion;

(2) Where appropriate, grading and landscaping shall incorporate on-site stormwater runoff for supplemental on-site irrigation;

(3) Where water is dispersed to natural ground or channels, appropriate energy dissipators shall be installed to prevent erosion at the point of discharge;

(4) Runoff from disturbed areas shall be detained or filtered by earth berms, planting strips, catch basins or other appropriate methods to prevent sedimentation from the disturbed area from obstructing natural or artificial channels or deposition on paved areas; and

(5) No earth, organic or construction material shall be deposited in or placed where it may be directly carried into a stream, lake or wetlands area.

[This Section added by Ord. 867, provisions eff. 5/27/93.]

Section 110.412.75 Maintenance. All landscaping, irrigation and screening shall be maintained at all times to conform to the regulations established in this article.

(a) Responsibilities. Landscaping and related equipment including, but not limited to, plants, screens, walkways, benches, fountains and irrigation systems shall be maintained by the applicant or subsequent owner of the property.

(b) Agreement. Prior to the issuance of a Certificate of Occupancy, the applicant shall file a Maintenance Agreement or access easement to enter and maintain the property, subject to the approval of the County District Attorney. Such a document shall ensure that if the property owner fails to maintain the requirements set forth in this article, the County will be able to file an appropriate lien(s) against the property in order to achieve the required maintenance.

(c) Plants. Required plants shall be maintained in healthy, vigorous, and disease and pest-free conditions so as to present a neat and healthy appearance free of refuse, debris and weeds. Plants shall be fertilized, cultivated and pruned on a regular basis and sound horticultural principles shall be practiced.

(d) Staking. Plants shall be staked, tied or otherwise supported as necessary. Supports shall be regularly monitored to avoid damage to plants and removed when appropriate.

(e) Pruning. Pruning shall be accomplished in accordance with accepted arboriculture standards.

(f) Turf Edge Trimming. Roadways, curbs and sidewalks shall be edged to prevent encroachment from the adjacent turfed areas. Line trimmers shall not be used to trim turf abutting trees or other plants. All turf within a twenty-four (24) inch radius of any tree trunk shall be removed.

(g) Replacement. Landscaping which is not maintained in a manner consistent with this article shall be replaced as follows:

(1) Replacement includes, but is not limited to, replacing plants damaged by insects, disease, vehicular traffic, vandalism, storm damage and natural disaster or occurrence;

(2) If the required landscaping is not living within one (1) year of a Certificate of Occupancy, it shall be replaced with equivalent vegetation;

(3) If the existing landscaping which was preserved is not living within two (2) years of a Certificate of Occupancy, it shall be replaced with equivalent new landscaping; and

(4) Replacement landscaping shall be installed within thirty (30) days following notification by the Director of Community Development that a violation of this article has occurred.

[This Section added by Ord. 867, provisions eff. 5/27/93.]

Section 110.412.80 Guarantee of Completion. To ensure proper installation and compliance with approved plans required in Section 110.412.15, Required Plans, the person responsible for preparation of the required plans, or a qualified designated representative of the individual or firm which prepared the plans, shall conduct a final field inspection prior to issuance of a Certificate of Occupancy. It shall be unlawful to occupy the premises unless the required landscaping, irrigation and screening is installed in accordance with these regulations, or a faithful performance bond or other satisfactory guarantee of completion insuring the faithful performance of all work, is accepted by the Director of Community Development. If any person fails to complete any improvement as specified in the approved plans, and as agreed within the time specified, the Board of County Commissioners may cause the bond to be forfeited in the amount necessary to finish the uncompleted portion of the work.

[This Section added by Ord. 867, provisions eff. 5/27/93.]

Article 414
NOISE AND LIGHTING STANDARDS

Sections:

110.414.00	**Purpose**
110.414.05	**Standards**
110.414.10	**Measurement**
110.414.15	**Airport Noise**
110.414.20	**Exceptions**
110.414.21	**Light and Glare**
110.414.25	**Nonconforming Use**

Section 110.414.00 Purpose. The purpose of this article, Article 414, Noise and Lighting Standards, is to allow for a pattern of land uses that minimizes the exposure of community residents to excessive noise.

Section 110.414.05 Standards. Sound levels shall not exceed the standards set forth in this section.

(a) Industrial Development. For property being developed within any industrial zone: seventy-five (75) Ldn at the property line.

(b) Residential Abutment. For property abutting areas developed residentially, or shown as residential on the area plan maps: sixty-five (65) Ldn at the property line.

(c) Public/Quasi-Public Facility Abutment. For property abutting local parks, schools, hospitals, group care facilities or facilities providing child care services: sixty-five (65) Ldn at the property line. Interior noise levels shall not exceed 45 Ldn.

(d) Development with Public/Quasi-Public Facility. For property being developed with a group care facility, school or hospital: sixty (60) Ldn at three (3) feet from any of the building's exterior walls. Interior noise levels shall not exceed 45 Ldn.

(e) Noise Abatement Near Highways and Railroads. Prior to approving any residential development, applicant(s) shall provide site plans indicating that outside noise levels at the residences shall not exceed a maximum of 65 dB when trains are passing or 65 Ldn next to highways.

(f) Other. If the sound levels affecting a project are greater than those allowed for project development, the developer or subdivider shall construct a noise attenuation barrier to bring sound levels down to required standards.

Section 110.414.10 Measurement. Measurement of sound levels shall be in accordance with the provisions of this section.

(a) A-Weighting. Sound levels shall be measured on the A-weighting network of a sound level meter meeting the requirements of USA Standards S14-1971 for General Purpose Sound Level Meters, or the latest revision published by the American National Standards Institute, Inc., using the slow meter response. An additional 10 dB weighting shall be imposed on the sound levels occurring during nighttime hours (10 p.m. to 7 a.m.) to determine the day-night average sound level (Ldn). The meter shall be calibrated and used according to the manufacturer's instructions.

(b) Location of Measurement. Measurements shall be taken with the microphone located at any point on the property line of the noise source, but no closer than three (3) feet from any wall and not less than three (3) feet above the ground.

(c) Timing and Number of Measurements. A twenty-four (24) hour measurement shall be taken. The sound level shall be the average of the hourly readings with the Ldn or day-night average sound level weighting.

Section 110.414.15 Airport Noise. All development proposed within the noise contours established for any airport by the Airport Authority of Washoe County shall conform to the Federal Aviation Regulation, Part 150, Land Use Compatibility Guidelines. Prior to the issuance of a building permit for any new structure within the established noise contour area and flight corridors, the property owner shall dedicate an avigation easement to the Airport Authority of Washoe County in such form and substance as established by the Airport Authority.

Section 110.414.20 Exceptions. The following sources of noise are exempt from the regulations of this article:

(a) Motor vehicles and other noise-generating equipment not under the control of the property;

(b) Emergency vehicles and equipment;

(c) Temporary construction, repair or demolition activities occurring between 7:00 a.m. and 7:00 p.m. on any day except Sunday; and

(d) Any use approved through a variance that specifically reviewed the issue of noise created by the use.

[Amended by Ord. 959, provisions eff. 7/26/96.]

Section 110.414.21 Light and Glare. This section sets forth criteria and standards to mitigate impacts caused by lighting and glare.

(a) Light. All light sources shall be located and installed in such a way as to prevent spillover lighting onto adjoining properties. The following provisions shall apply to all existing and proposed development:

(1) Any lighting facilities shall be so installed as to reflect away from adjoining properties. Covers must be installed on all lighting fixtures and lamps must not extend below the bottom of the cover.

(2) Light standard in or within one hundred (100) feet of residential zones shall not exceed twelve (12) feet in height. Additional standard height

may be permitted by the Director of Community Development provided such lights are a sharp cutoff lighting system.

(3) No permanent rotating searchlights shall be permitted in any regulatory zone, except that an administrative permit may be issued by the hearing examiner for a period not to exceed three (3) days for a temporary searchlight. The administrative permit shall be limited to a maximum of three (3) times in any one (1) calendar year.

(b) Lighting Design. The style and intensity of lighting shall consider not only function and appearance, but shall reflect the existing character of surrounding areas and shall replicate natural light as much as possible.

(c) Glare. Reflected glare on nearby buildings, streets or pedestrian areas shall be avoided by incorporating overhangs and awnings, using non-reflective building materials for exterior walls and roof surfaces, controlling angles of reflection, and placing landscaping and screening in appropriate locations.

(d) Interior Lighting. Where residential uses abut non-residential uses, interior lighting of the non-residential uses shall be controlled at night through the use of timers, window blinds, or other acceptable means. This provision shall apply to all existing and proposed development.

(e) Conflict with Other Portions of the Development Code. Where another provision of the Development Code may conflict with the provisions of this section, the more restrictive provision shall control.

[Amended by Ord. 919, provisions eff. 2/1/95; Ord. 1234, provisions eff. 5/21/04.]

Section 110.414.25 Nonconforming Use. Any development which was permitted by or conformed to the requirements of the zoning ordinance in effect prior to the effective date of this section shall be considered a nonconforming use subject to the provisions of Article 904, Nonconformance, except for the provisions of Section 110.414.21, Light and Glare.

[Amended by Ord. 919, provisions eff. 2/1/95.]

Article 416
FLOOD HAZARDS

Sections:

110.416.00	**Purpose**
110.416.05	**Limitations of Liability**
110.416.10	**Applicability**
110.416.15	**Areas of Special Flood Hazard**
110.416.18	**Critical Flood Storage Areas**
110.416.20	**Compliance**
110.416.25	**Relation to Other Restrictions**
110.416.30	**Interpretation**
110.416.35	**Letter of Map Amendment**
110.416.40	**Application Requirements for Permits**
110.416.45	**Owner/Developer Responsibilities**
110.416.50	**County Responsibilities**
110.416.55	**Standards for Subdivision**
110.416.57	**Standards for All Development in Critical Flood Zone 1**
110.416.60	**Construction Standards**
110.416.65	**Flood Zone Requirements**
110.416.70	**Flood Hazard Reduction: Prohibited Uses and Structures within Floodways**
110.416.75	**Appeals**
110.416.80	**Penalties for Violations**

Section 110.416.00 Purpose. The purpose of this article, Article 416, Flood Hazards, is to promote the public health, safety and welfare by establishing guidelines and requirements for the development of property within areas determined to be subject to flood damage.

Section 110.416.05 Limitations of Liability. This section provides for limitations of County liability.

(a) Rationale for Article. The degree of flood protection required by this article is considered reasonable for purposes of complying with the minimum standards required by the Federal Insurance Administration for maintaining eligibility for Washoe County property owners who desire flood insurance, the availability of which, or the rates for which, may be dependent upon the existence of this article, and for maintaining eligibility for the Washoe County area for federal disaster relief.

(b) Responsibility of Washoe County. The degree of flood protection required by this article is not intended to create a standard or duty of care on the part of Washoe County or any other person or entity related to the design, construction, inspection or maintenance of flood or drainage facilities. This article does not imply that land outside flood hazard areas or uses permitted within such areas will be free from flooding or flood damage. Larger floods can and will occur. This article shall not create liability on the part of Washoe County, any officer or employee thereof or the Federal Insurance Administration, for any flood damages

that result from reliance on this article or any administrative decision lawfully made thereunder.

(c) Flood Control Facilities. Nothing in this article may be construed as a determination that any flood or drainage facility is adequate in any respect including, without limitation, adequacy of design, construction, inspection or maintenance. Failure of any person or entity to comply with this article is not intended to provide a basis for negligence or any other type of claim for relief; failure to comply has the sole effect of jeopardizing eligibility for federal funding or other federal assistance respecting flood damage or flood insurance.

(d) Property Rights. This article is not intended to alter the rights, obligations or liabilities of property owners who develop real estate in areas subject to this article or in areas subject to flooding. Such legal status shall remain as provided by other law, without reference to this article. The minimum standards of this article do not relieve a property owner of the responsibility to do more than this article requires if more is required to provide adequate protection for the property being developed and for other properties that may be affected.

(e) Severability. This article and the various parts thereof are hereby declared to be severable. Should any section of this article be declared by the courts to be unconstitutional or invalid, such decision shall not affect the validity of the article as a whole, or any portion thereof other than the section so declared to be unconstitutional or invalid.

[Amended by Ord. 1091, provisions eff. 4/28/00.]

Section 110.416.10 Applicability. This article applies to all flood hazard areas, including critical flood storage Zone 1, within the unincorporated areas of Washoe County, pursuant to NRS 543.

[Amended by Ord. 1091, provisions eff. 4/28/00; Ord. 1259, provisions eff. 2/4/05.]

Section 110.416.15 Areas of Special Flood Hazard. The flood hazard areas identified by the Federal Insurance Administration through the Federal Emergency Management Agency in a scientific and engineering report entitled "Flood Insurance Study for Washoe County, Nevada, Unincorporated Areas" dated February 1, 1984, with the accompanying Flood Insurance Rate Maps and all subsequent revisions and amendments, are hereby adopted and incorporated into the provisions of this article. The "Flood Insurance Study for Washoe County, Nevada, Unincorporated Areas" with the accompanying Flood Insurance Rate Maps and all subsequent revisions and amendments are on file at the office of the Washoe County Department of Public Works.

[Amended by Ord. 1091, provisions eff. 4/28/00; Ord. 1356, provisions eff. 12/21/07.]

Section 110.416.18 Critical Flood Storage Areas. The Washoe County Department of Water Resources maintains detailed information concerning the Truckee Meadows Flood Plain Storage Zones and critical flood storage Zone 1 identified in Policy 3.1.b of the Washoe County Comprehensive Water Management Plan, as amended. These provisions are hereby adopted and incorporated into the provisions of this article.

[Amended by Ord. 1356, provisions eff. 12/21/07.]

Section 110.416.20 Compliance. All structures or land constructed, located, extended, converted or altered after August 1, 1984 shall be in full compliance with this article and other applicable laws and regulations.

Section 110.416.25 Relation to Other Restrictions. This article is not intended to repeal, abrogate or impair any existing easements, covenants or deed restrictions. If those sections or an article of this Development Code or any easement, covenant or deed restriction conflict or overlap, whichever imposes the more stringent requirement shall prevail.

Section 110.416.30 Interpretation. In the interpretation and application of this article, all provisions shall be considered as minimum requirements, shall be liberally construed in favor of Washoe County, and shall be deemed to neither limit nor repeal any other powers granted under state or local statute, ordinance or regulation. Definitions contained in Article 920, Definitions for Floodplain Management shall control.

[Amended by Ord. 1356, provisions eff. 12/21/07.]

Section 110.416.35 Letter of Map Amendment. If an owner or developer of property believes the property to be inappropriately designated as being in a flood hazard area on the Flood Insurance Rate Maps, appeal may be made to the Federal Emergency Management Agency (FEMA).

(a) Appeals Procedure. All appeals must be submitted to the Public Works Director for review. The Public Works Director shall transmit the appeals to the Federal Emergency Management Agency for its consideration. Appeals must include the provisions set forth in this subsection and current FEMA regulations.

(1) An actual stamped copy of the recorded plat of the property showing official recordation and proper citation, or a photocopy of the property's legal description as shown on the recorded deed (e.g. lot, block and plot number, etc.), together with a photocopy of the appropriate page of the County Assessor's parcel map.

(2) A copy of the Flood Insurance Rate Map (FIRM) with the location of the property identified.

(3) Certification by a Nevada registered engineer or surveyor stating:

(i) The type of structure;

(ii) The elevation of the lowest adjacent grade (LAG) to the structure, which must be above the base flood elevation; and

(iii) The elevation of the top of the lowest floor.

(4) When appealing the elevation or boundaries of the base flood, a thorough technical hydrological study, certified by a Nevada registered engineer, of the contributing area which will substantiate the appeal shall be submitted.

(5) A signed copy of the statement asserting the accuracy of the information, submitted on the form entitled "Request for Letter of Map Amendment."

(b) Letter of Map Amendment. If the appellant shows that the lowest adjacent grade (LAG) is higher in elevation than the base flood, that the elevation of the base flood is incorrect, or that the boundaries of the base flood are incorrect, the Federal Emergency Management Agency will provide the owner or developer with a Letter of Map Amendment (LOMA) which will exempt the property from the requirements of this article, and which may exempt the owner from the mandatory purchase of flood insurance.

[Amended by Ord. 876, provisions eff. 7/7/93. Amended by Ord. 1091, provisions eff. 4/28/00.]

Section 110.416.40 Application Requirements for Permits. Any person desiring to construct, locate, extend, convert or alter a structure or alter any land within any flood hazard area must obtain a building permit, grading permit and/or a special use permit. The Washoe County Department of Public Works shall determine whether the proposed development is within any flood hazard area. If the development is within any flood hazard area, the procedures and requirements set forth in Sections 110.416.45 to 110.416.80, inclusive, must be satisfied before either a building permit, grading permit, and/or a special use permit, is issued.

[Amended by Ord. 1091, provisions eff. 4/28/00.]

Section 110.416.45 Owner/Developer Responsibilities. The responsibilities of the owner and developer are as set forth in this section.

(a) Information Requirements. The owner or developer shall submit the information contained within this subsection for review by the Department of Public Works:

(1) The elevation of the base flood at each site proposed for development within a flood hazard area;

(2) In Zones AE and AH, proposed elevation in relation to mean sea level of the top of the lowest floor of all structures, certified by a Nevada registered engineer or land surveyor; in Zone A and Zone AO, elevation of highest existing grade and proposed elevation of the top of the lowest floor of all structures, certified by a Nevada registered engineer or land surveyor;

(3) Proposed elevation in relation to mean sea level to which any structure will be floodproofed, certified by a Nevada registered engineer or land surveyor;

(4) Certification by a Nevada registered engineer that the floodproofing methods used for any nonresidential structure meet the floodproofing criteria in Section 110.416.65;

(5) Plans for any watercourse proposed to be altered or relocated, which must be designed by a Nevada registered engineer in conformance with the requirements of Washoe County. The flood carrying capacity of the unaltered watercourse shall be maintained in the altered watercourse;

(6) An operation and maintenance plan for any acceptable flood protection measures (e.g. levees, dams, dikes, reservoirs); and

(7) Within six (6) months, notify FEMA of changes in the base flood elevation by submitting technical or scientific data to assure that insurance and floodplain management is based on current data.

(b) Permit Requirement. The owner or developer shall obtain all applicable permits from the State of Nevada Division of State Lands, Nevada Division of Environmental Protection, and all other state and federal agencies. Permits must be obtained before altering or relocating any waterway under the jurisdiction of such agency. A copy of the permit will be provided to the Department of Public Works.

(c) Certification Requirements. The owner or developer is responsible for compliance with all provisions of this article. Additionally, the owner or developer shall provide the Department of Public Works with "as-built" certification by a Nevada registered engineer or land surveyor as to the elevation requirements or, if floodproofing is a permissible means of compliance, shall provide the Department of Public Works with "as-built" certification by a Nevada registered engineer as to the floodproofing requirements for any applicable nonresidential structure. Said certification shall be provided prior to issuance of a Certificate of Occupancy. Certification requirements by a Nevada registered engineer or land surveyor as required in this article shall be provided on a FEMA "Elevation Certificate" form. Signing of the Elevation Certificate by a Nevada registered engineer or land surveyor constitutes their assurance that compliance with all requirements of this article have been met.

[Amended by Ord. 1091, provisions eff. 4/28/00; Ord. 1356, provisions eff. 12/21/07.]

Section 110.416.50 County Responsibilities. The responsibilities of the County are as set forth in this section.

(a) Floodplain Administrator. The Public Works Director or assigned designee is hereby appointed Floodplain Administrator to administer and implement the requirements set forth for the development in the floodplains.

(b) Permit Review. The Department of Public Works shall review all permit applications to determine:

(1) That the requirements of Sections 110.416.00 to 110.416.80, inclusive, have been satisfied;

(2) That the cumulative effect of the proposed development, when combined with all other existing and anticipated development, will not increase the water surface elevation of the base flood more than one (1) foot at any point; and

(3) That construction methods and practices are utilized to minimize flood damage for all proposed construction and other developments.

(c) Availability of Certifications. The Department of Public Works shall maintain for public inspection and make available as needed for flood insurance policies all certifications required by this article.

(d) Notification Requirements. The Department of Public Works shall insure that adjacent affected communities and the Nevada Department of Conservation,

Division of Water Planning are notified prior to any alteration or relocation of a watercourse and submit evidence of such notification to the Federal Emergency Management Agency.

(e) Flood Hazard Area and Critical Flood Storage Zone Delineation. The Department of Public Works shall provide interpretations, where needed, as to the location of the boundaries of the flood hazard areas, critical flood storage zones and the elevation of the base flood, if known.

(f) Flood Elevation Determination. If base flood elevation data have not been provided in accordance with Section 110.416.15, the Department of Public Works shall obtain, review and reasonably utilize any base flood elevation and floodway data available from federal, state or other acceptable sources as criteria for requiring that new construction, substantial improvements or other improvements in flood hazard areas as shown on the existing Flood Insurance Rate Maps meet the standards in Sections 110.416.55 to 110.416.80. If deemed necessary by the Department of Public Works, the owner or developer may be required to provide an engineered hydrological study to determine the base flood flow and elevations.

(g) Availability of Plans. The Department of Public Works shall maintain on file all operation and maintenance plans submitted by the developer for every acceptable flood protection measure.

[Amended by Ord. 1091, provisions eff. 4/28/00; Ord. 1259, provisions eff. 2/4/05; Ord. 1356, provisions eff. 12/21/07.]

Section 110.416.55 Standards for Subdivision. The standards for subdivisions subject to flood damage are as set forth in this section.

(a) All new subdivision proposals and other proposed developments (including proposals for manufactured home parks and subdivisions) greater than fifty (50) lots or five (5) acres, shall provide base flood elevation data.

(b) All subdivision improvement plans shall identify the flood hazard area, the elevation of the base flood, and the elevation of every proposed structure, pad and adjacent grade. If the site is filled above the base flood, the final pad elevation shall be certified by a Nevada registered engineer or land surveyor and provided to the Department of Public Works.

(c) All subdivision proposals shall be consistent with the need to minimize flood damage.

(d) All subdivision proposals shall have public utilities and facilities such as sewer, gas, electrical and water systems located and constructed to minimize flood damage.

(e) All subdivision proposals shall have adequate drainage provided to reduce exposure to flood damage.

(f) No subdivision improvement shall be placed in a floodway, except as provided in Section 110.416.70.

[Amended by Ord. 1091, provisions eff. 4/28/00.]

Section 110.416.57 Standards for All Development in Critical Flood Zone 1. The standards for development in Critical Flood Zone 1 are set forth in this section.

(a) Mitigation Required for Displacing Projects. All displacing projects should meet the following requirements:

(1) Stormwater discharges from displacing projects should be limited to pre-development conditions relative to peak flows; and,

(2) Provide flood storage volume mitigation to achieve no adverse impact.

(b) Mitigation Methods and Requirements. The mitigation requirements established in (a) above may be met by:

(1) Creating one (1) unit of mitigation storage volume for every one (1) unit of floodplain storage volume that is displaced. The mitigation storage volume must occur within:

(i) The same flood storage area as the volume displaced; and,

(ii) At the same elevation band as the volume displaced; or

(2) If mitigation storage volume is proposed to be outside the same flood storage area or the same elevation band, then the mitigation within the Critical Flood Zone 1 must:

(i) Create a minimum of one (1) unit of mitigation storage volume for every one (1) unit of floodplain storage volume displaced or as needed to comply with Section 110.416.57(b)(2)(ii); and,

(ii) Demonstrate no adverse impact through application of the Truckee River Flood Project Mitigation model.

(c) Mitigation Storage Volume. The entire amount of mitigation storage volume must be available for flood storage before any flood event. Detention basins required by other ordinances are not eligible to be counted as mitigation storage volume.

(d) Mitigation Location. Mitigation cannot occur in conflict with and/or at the same location of approved Truckee River Flood Project features as indicated on maps on file in the Truckee River Flood Management Office.

(e) Mitigation Timing. Mitigation must occur concurrently with or prior to a reduction of flood storage volume.

(f) Exceptions. This section applies only to the parcels shown on Figures 110.416.57.1-110.416.57.3 and at the time of building permit, the parcels must be zoned as shown on Figures 110.416.57.1-110.416.57.3 for the exceptions to apply.

(1) Any construction activity that decreases the volume of flood storage in Zone 1 shall be prohibited.

(2) All development located on the parcels shown on Figure 110.416.57.1 shall provide compensatory storage at a one to one (1:1) ratio on the

project site or in a hydrologically connected basin, as determined by the Department of Public Works.

(3) Compensatory storage may be, but is not required to be, hydrologically connected to onsite drainage designs required under Article 420, Storm Drainage Standards, of the Development Code.

(4) No critical facilities will be allowed on parcels shown on Figures 110.416.57.1-110.416.57.3.

(5) Compensatory storage on a one-to-one (1:1) ratio may be allowed in an existing hydrologically connected regional storage mitigation facility determined adequate by the Department of Public Works.

(6) The elevation of the lowest finished floor shall be based on the most current calculated water surface elevation for the without project condition under the 117-year storm event as determined from the Truckee River Flood Project Hydraulic Model being maintained by the Truckee River Flood Management Project staff for the Truckee River Flood Project facilities.

(7) New building structures, or existing structures that are elevated, shall be constructed on piers or vented stem walls that allow flood waters to rise in the crawl space.

(g) Definitions. For the purposes of this article, the definitions listed hereunder shall be construed as specified in this section.

Critical Flood Zone 1. "Critical Flood Zone 1" means that area depicted as Zone 1 in the Truckee Meadows Floodplain Storage Zone map, Figure 1-2 of the Regional Water Plan dated January 2004.

Displacing Projects. "Displacing projects" means any proposed public or private construction which changes existing grades, imports fill, and/or displaces any volume of flood water in Critical Flood Zone 1 below the water surface indicated in Section 110.416.57(f)(6).

Elevation Band. "Elevation band" means a range of elevation of ten (10) vertical feet from the project's lowest natural elevation as defined in Section 110.416.57(f)(6).

Elevation Map. "Elevation map" means the latest version of the Truckee River Flood Management Project's Ground Elevation and Flood Water Elevation Map Series adopted and administered and updated from time to time pursuant to a cooperative agreement between all jurisdictions who have adopted similar regulations. A copy of the Elevation map will be kept on the Truckee River Flood Management Project website.

Flood Storage Area. "Flood storage area" means those areas designated on the Elevation map. If construction or mitigation is to occur in an area that is not designated as a flood storage area on the Elevation map, then mitigation must occur as provided in (b)(2) of this section.

Mitigation Storage Volume. "Mitigation storage volume" means flood storage volume provided in Critical Flood Zone 1 to offset a displacement of flood water volume as a result of construction activity.

No Adverse Impact. "No adverse impact" means as determined by the application and output of the Truckee River Flood Project Mitigation Model(s), water surface elevation in the Critical Flood Zone 1 within the 1997 water surface elevation as determined by the Elevation maps is not to be raised.

Truckee River Flood Project Mitigation Model. "Truckee River Flood Project Mitigation model" means a hydraulic model as updated from time to time, adopted and administered pursuant to a cooperative agreement between all jurisdictions who have adopted similar regulations. Until such a cooperative agreement is reached, the HEC-RAS Version 4.0 model prepared by the United States Army Corps of Engineers shall be used.

Figure 110.416.57.1

EXEMPTED PARCELS IN CRITICAL FLOOD ZONE 1

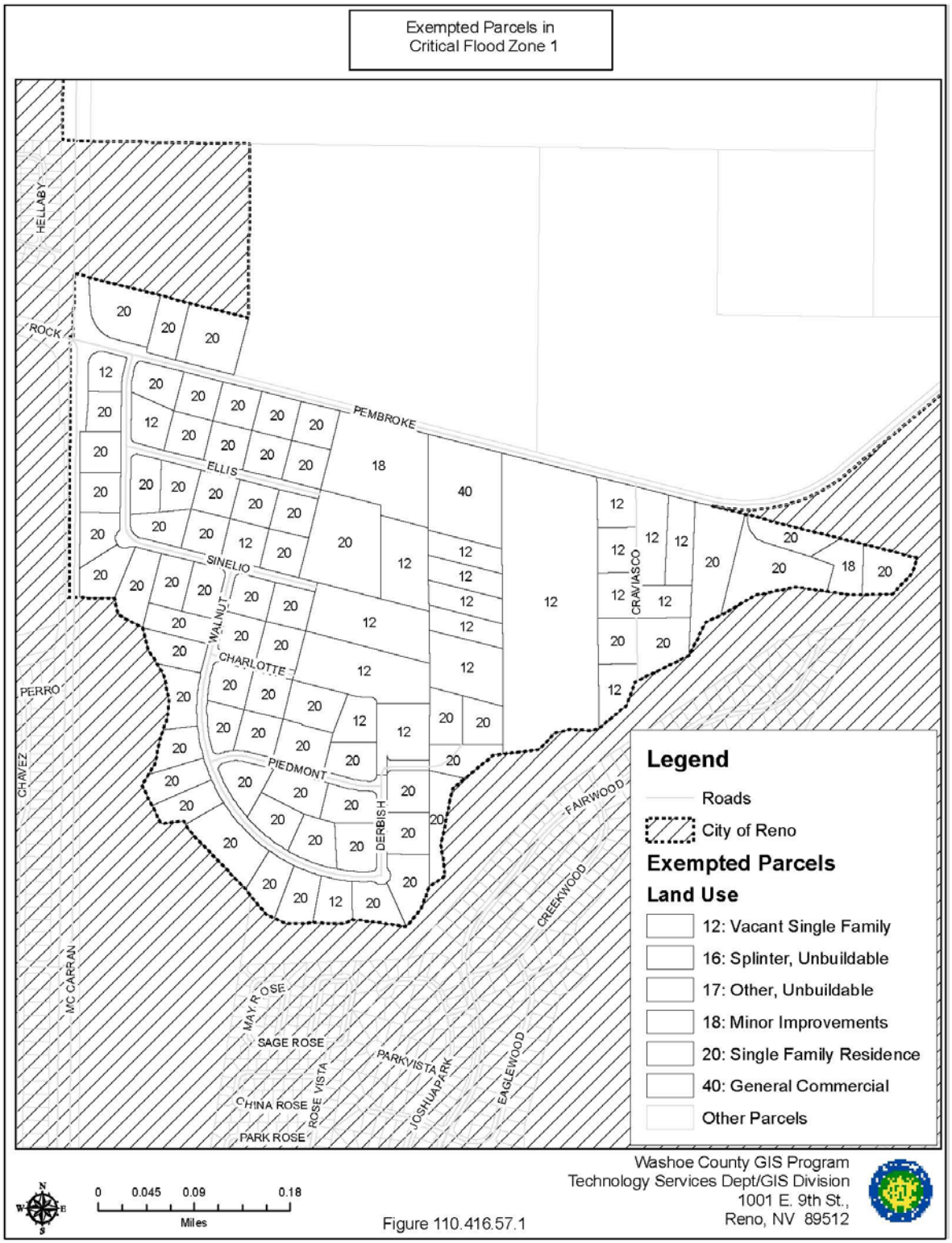

Figure 110.416.57.1

Figure 110.416.57.2

EXEMPTED PARCELS IN CRITICAL FLOOD ZONE 1

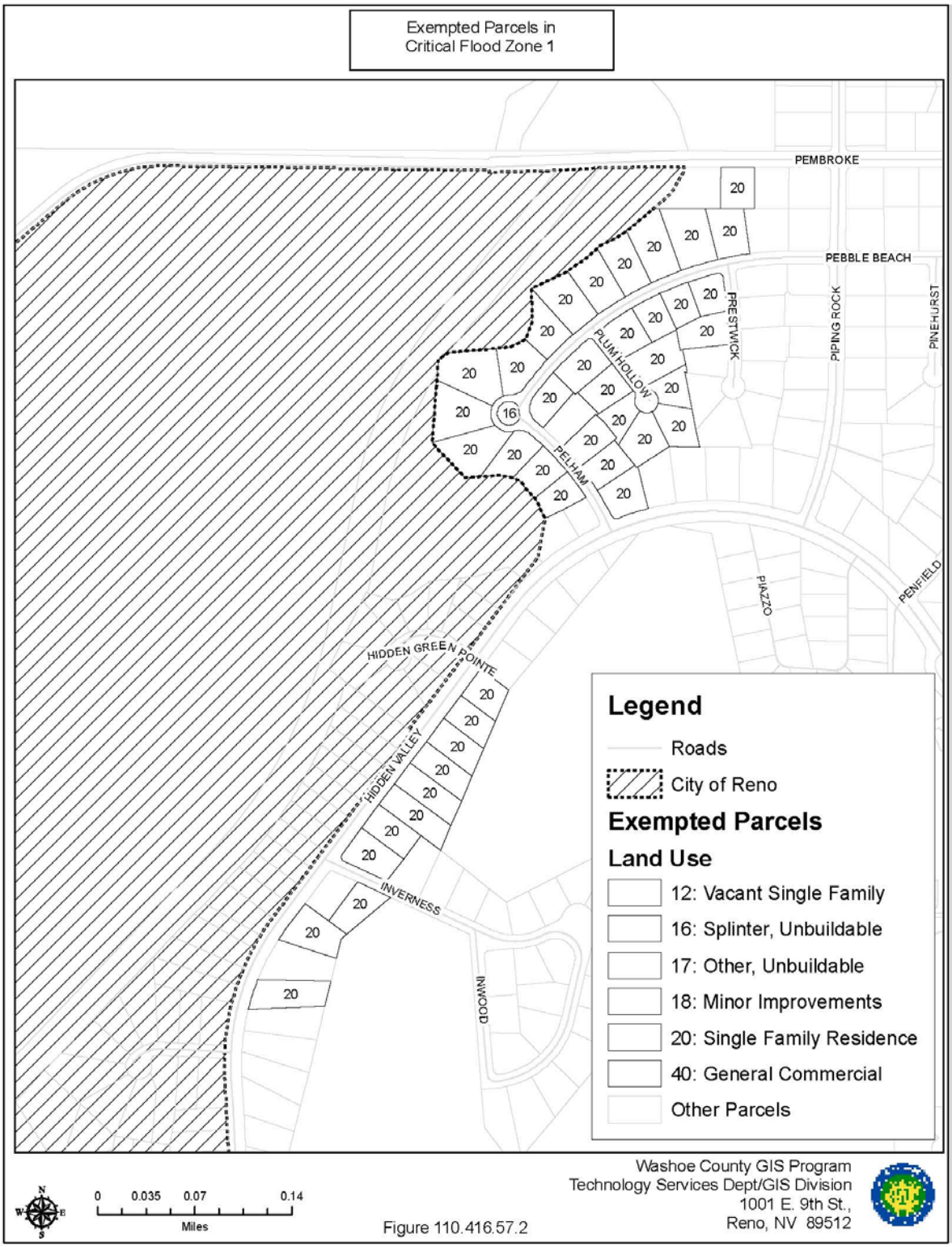

Figure 110.416.57.2

Figure 110.416.57.3

EXEMPTED PARCELS IN CRITICAL FLOOD ZONE 1

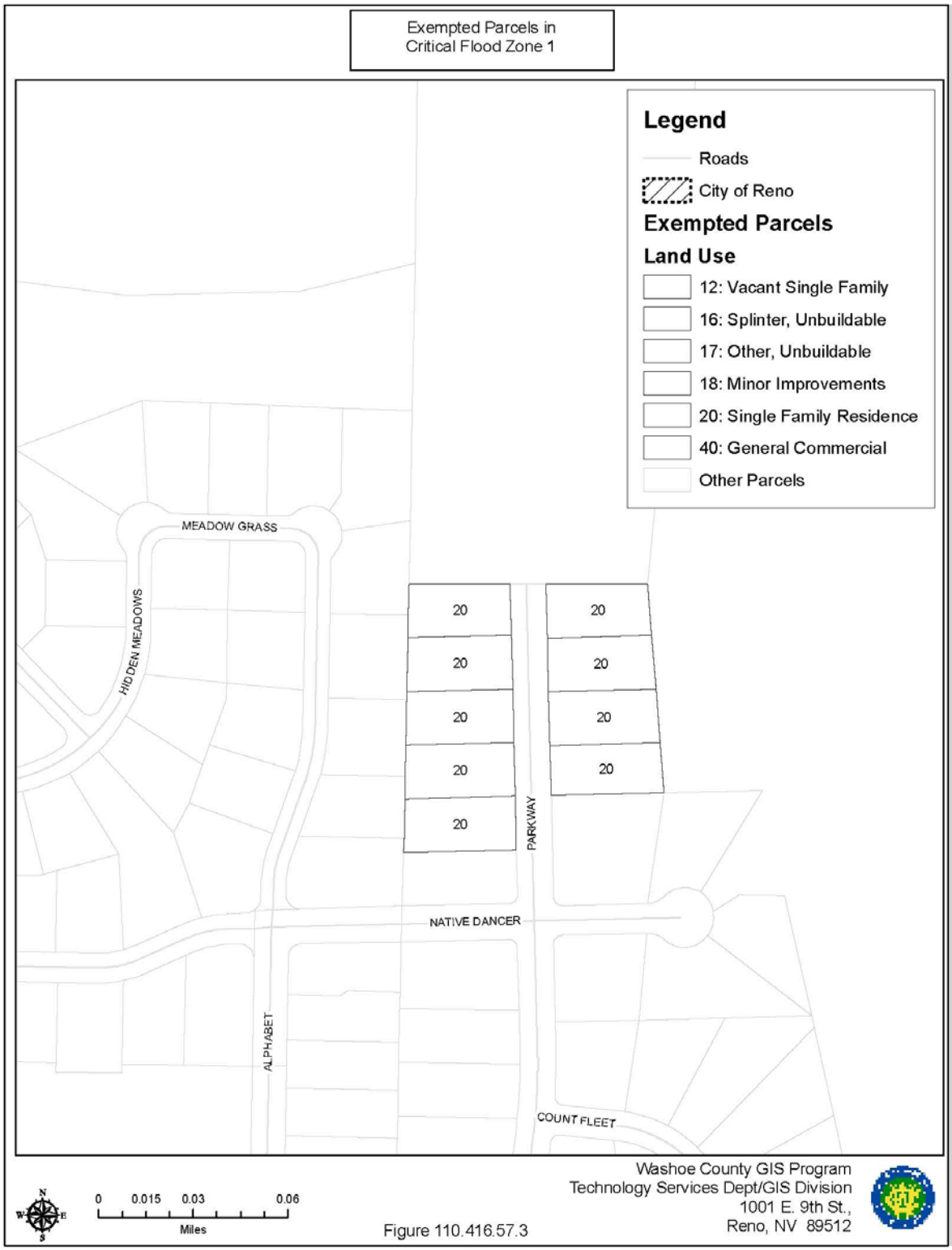

[Added by Ord. 1259, provisions eff. 2/4/05; Amended by Ord. 1457, provisions eff. 1/21/11.]

Section 110.416.60 Construction Standards. In all flood hazard areas, the required minimum standards for construction materials and methods are set forth in this section. The terms (as defined by FEMA) are set forth in Article 920.

(a) All Construction. All new construction and substantial improvements shall be designed (or modified) and adequately anchored to prevent flotation, collapse or lateral movement of the structure resulting from hydrodynamic and hydrostatic loads, including the effects of buoyancy; and be elevated on stemwalls, pilings, columns or armored fill so that the top of the lowest floor is elevated in conformance with provisions of Section 110.416.65, Flood Zone Requirements.

(b) Manufactured Homes. All manufactured homes shall meet the anchoring standards of Section 110.416.65, Flood Zone Requirements.

(c) Materials. All new construction and substantial improvements shall be constructed with materials and utility equipment resistant to flood damage.

(d) Methods. All new construction and substantial improvements shall use methods and practices that minimize flood damage; and provide adequate drainage paths around structures on slopes to guide flood waters around and away from proposed structures.

(e) Mechanical and Electrical. All elements that function as part of the structure (such as furnace, water heater, air conditioner and other electrical equipment) shall be elevated to one (1) foot or more above the base flood elevation or depth number specified on the Flood Insurance Rate Maps or shall be designed and/or located so as to prevent water from entering or accumulating within components during conditions of flooding.

(f) Methods of Hydrostatic Equalization. All new construction and substantial improvements, which have fully enclosed areas below the lowest floor that are subject to flooding shall be designed to automatically equalize hydrostatic flood forces on exterior walls by allowing for the entry and exit of floodwaters. Designs for meeting this requirement shall be certified by a Nevada registered engineer and must meet or exceed the provisions of this subsection.

(1) A minimum of two (2) openings having a total net area of not less than one (1) square inch for every square foot of enclosed area subject to flooding shall be provided.

(2) The bottom of all openings shall be no higher than one (1) foot above original grade. Openings may be equipped with screens, louvers or other cover devices, provided that they permit the automatic entry and exit of floodwaters.

(3) The exterior walls of all new construction and substantial improvements which have fully enclosed areas below the lowest floor that are subject to impact forces and drag forces shall also be designed by a Nevada registered engineer to withstand these and all hydrodynamic flood forces.

(g) Utilities. The construction standards for utilities shall be as set forth below:

(1) Water and Wastewater Systems. All new and replacement water supply and sanitary sewerage systems shall be designed to minimize or eliminate infiltration of floodwaters into the system and discharge from systems into floodwaters.

(2) On-site Systems. On-site waste disposal systems shall be located to avoid impairment to them or contamination from them during flooding.

(h) Crawlspace Construction. All new construction and substantial improvements, which have fully enclosed areas below the lowest floor and below the lowest adjacent exterior grade (for frost protection) shall be constructed in accordance with FEMA Technical Bulletin 11-01 and subsequent revisions.

[Added by Ord. 922, provisions eff. retro to 9/30/94. Amended by Ord. 1091, provisions eff. 4/28/00; Ord. 1356, provisions eff. 12/21/07.]

Section 110.416.65 Flood Zone Requirements. In all flood hazard areas, elevation and floodproofing standards shall be in accordance with the provisions of this section. Elevations shall be certified by a Nevada registered engineer or land surveyor.

(a) Zones AE and AH Requirements. In Zones AE and AH, new construction and substantial improvement of any structure shall have the top of the lowest floor (including basement floor) elevated to one (1) foot or more above the base flood elevation unless the construction of a crawlspace is in accordance with Section 110.416.60(h). Nonresidential structures must meet the standards in subsection (f) of this section.

(b) Zone AO Requirements. Zone AO, areas subject to alluvial fan flooding, have irregular flow paths that result in erosion of existing channels and the undermining of fill material. In every such zone, the provisions of this subsection shall be met.

(1) All structures must be securely anchored to minimize the impact of the flood and sediment damage.

(2) New construction and substantial improvement to any structure shall have the top of the lowest floor (including basement floor) elevated to at least one (1) foot above the depth number specified on the Flood Insurance Rate Maps unless the construction of a crawlspace is in accordance with Section 110.416.60(h). Nonresidential structures must meet the standards in subsection (f) of this section.

(3) Use of all fill materials must be armored to protect the material from the velocity of the flood flow.

(4) All proposals for subdivision development must provide a mitigation plan that identifies the engineering methods used to:

(i) Protect structures from erosion and scour caused by the velocity of the flood flow; and

(ii) Capture or transport flood and sediment flow through the subdivision to a point of deposition that will not create a health or safety hazard.

(c) Zone A Requirements. In an unnumbered Zone A, new construction and substantial improvement to any structure shall have the top of the lowest floor (including basement floor) elevated to either of the standards in this subsection unless the construction of a crawlspace is in accordance with Section 110.416.60(h). Non-residential structures must meet the standards in subsection (f) of this section.

(1) A height of at least two (2) feet above the highest adjacent undisturbed ground elevation if no base flood elevation has been determined; or

(2) A height of at least one (1) foot above the base flood elevation as determined by an engineered hydrological study provided by the owner or developer, if deemed necessary by the Department of Public Works.

(d) Fabricated Housing Requirements. All fabricated homes, as specified in Article 312, Fabricated Housing, and additions to fabricated homes shall be constructed using methods and practices in conformance with subsections (a), (b) or (c) of this section to minimize flood damage. Fabricated homes will be set on a securely anchored permanent foundation system to resist flotation, collapse and lateral movement. The foundation shall be designed by a registered engineer.

(e) Recreational Vehicle Requirements. All recreational vehicles placed on sites within Zones A, AH, AE and AO shall meet the following requirements:

(1) Be on site for fewer than one hundred eighty (180) days;

(2) Be fully licensed and ready for highway use; or

(3) Meet the standards in subsection (d) of this section.

(f) Nonresidential Requirements. Nonresidential construction shall either be elevated in conformance with subsection (a), (b), or (c) of this section, or together with attendant utility and sanitary facilities, be floodproofed to the same appropriate elevations as the top of the lowest floor elevations as indicated in subsection (a), (b), or (c) of this section. All floodproofing measures shall be designed by a Nevada registered engineer. Examples of floodproofing include, but are not limited to:

(1) Installation of watertight doors, bulkheads and shutters;

(2) Reinforcement of walls to resist water pressure;

(3) Use of paints, membranes or mortars to reduce seepage through walls;

(4) Addition of mass or weight to the structure to resist flotation; and

(5) Armor protection of all fill materials from scour and erosion.

(g) Attached or Detached Garage Requirements. All garages, attached or detached, shall either be elevated in conformance with subsection (a), (b) or (c) of this section or shall provide for hydrostatic equalization in accordance with Section 110.416.60(f).

[Renumbered and renamed from Section 110.416.70 entitled "Construction Standards: Elevation and Floodproofing" and amended by Ord. 922, provisions eff. retro to 9/30/94. Amended by Ord. 1091, provisions eff. 4/28/00; Ord. 1356, provisions eff. 12/21/07.]

Section 110.416.70 Flood Hazard Reduction: Prohibited Uses and Structures within Floodways.

(a) Prohibited Floodway Encroachments. Every new encroachment, including fill, new construction, substantial improvement and other development, is prohibited in a designated floodway, except as provided in subsection (b) of this section.

(b) Exceptions. Improvements may be allowed in the floodway if it is demonstrated through hydrologic and hydraulic analysis and certified by a Nevada registered engineer that the proposed improvements will not result in any increase in flood levels during the occurrence of the base flood discharge, and that the improvements meet the standards in Sections 110.416.55 to 110.416.65 inclusive.

[Renumbered from 110.416.80 by Ord. 922, provisions eff. retro to 9/30/94. Amended by Ord. 1091, provisions eff. 4/28/00.]

Section 110.416.75 Appeals. Appeals shall be as set forth in this section.

(a) Appeals for Variances. The Board of County Commissioners shall hear and decide appeals and requests for variances from the requirements of this article.

(b) Appeals for Errors. The Board of County Commissioners shall hear and decide appeals when it is alleged there is an error in any requirement, decision or determination.

(c) Appeals Considerations. In passing upon such applications, the Board of County Commissioners shall consider all technical evaluations and all relevant requirements, factors and standards specified in this article and shall also consider the provisions of this subsection:

(1) The danger that materials may be swept onto other lands to the injury of others;

(2) The danger to life and property due to flooding or erosion damage;

(3) The susceptibility of the proposed facility and its contents to flood damage and the effect of such damage on the individual owner;

(4) The importance of the services provided by the proposed facility to the community;

(5) The necessity to the facility of a waterfront location, where applicable;

(6) The availability of alternative locations that are not subject to flooding or erosion damage and would suffice for the proposed use;

(7) The compatibility of the proposed use with existing and anticipated development;

(8) The relationship of the proposed use to the Master Plan and floodplain management program for that area;

(9) The safety of access to the property in times of flood, for ordinary and emergency vehicles;

(10) The expected heights, velocity, duration, rate of rise and sediment transport of the floodwaters expected at the site; and

(11) The costs of providing governmental services during and after flood conditions, including maintenance and repair of public utilities and facilities (such as sewer, gas, electrical and water systems, and streets and bridges).

(d) Issuance of Variance. Variances shall only be issued when in compliance with the provisions of this section.

(1) A showing of good and sufficient cause such as renovation, rehabilitation or reconstruction. It is not good and sufficient cause for a variance to be issued upon the basis of economic considerations, aesthetics or because variances have been used in the past.

(2) A determination that failure to grant the variance would result in exceptional hardship to the applicant.

(3) A determination that the granting of a variance will not result in additional threats to public safety, extraordinary public expense, create nuisances, cause fraud on or victimization to the public, or conflict with existing local laws or ordinances.

(e) Extent of Variance. Variances shall only be issued upon a determination that the variance is the minimum necessary, considering the flood hazard, to afford relief.

(f) Conditions of Variance. Upon consideration of the factors set forth in subsection (c) of this section and the purpose of this article, the Board of County Commissioners may attach such conditions to the granting of variances as it deems necessary to further the purpose of this article.

(g) Historic Resources. Variances may be issued for the reconstruction, rehabilitation or restoration of structures listed on the National Register of Historic Places or the State Inventory of Historic Places without regard to the procedures set forth in this section.

(h) Increase in Flood Levels. Variances shall not be issued within any designated floodway if any increase in flood levels during the base flood discharge would result.

(i) Written Notice. Any applicant to whom a variance is granted shall be given written notice that the structure will be permitted to be built with a lowest floor elevation below the base flood elevation and that the cost of flood insurance may be commensurate with the increased risk resulting from the reduced lowest floor elevation. The variance does not remove the obligation by the owner to keep and maintain flood insurance.

(j) Responsibilities of Department of Public Works. The Washoe County Department of Public Works shall maintain the records of all appeal actions and report any variances to the Federal Emergency Management Agency upon request.

[Renumbered from 110.416.85 by Ord. 922, provisions eff. retro to 9/30/94. Amended by Ord. 1091, provisions eff. 4/28/00; Ord. 1447, provisions eff. 9/9/10.]

Section 110.416.80 Penalties for Violations. Any violation of this article shall be enforced as provided in Chapters 110 and 125 of the Washoe County Code, including without limitation prosecution as a misdemeanor.

[Renumbered from 110.416.90 by Ord. 922, provisions eff. retro to 9/30/94. Amended by Ord. 1356, provisions eff. 12/21/07.]

[Previous Section 110.416.60 entitled "Construction Standards: Anchoring," amended by Ord. 876, provisions eff. 7/7/93, repealed by Ord. 922, provisions eff. retro to 9/30/94. Previous Section 110.516.65 entitled "Construction Standards: Materials and Methods" repealed by Ord. 922, provisions eff. retro to 9/30/94. Previous Section 110.416.75 entitled "Construction Standards: Utilities" repealed by Ord. 922, provisions eff. retro to 9/30/94. Previous Map 110.416.18.1 entitled "Truckee Meadows Flood Plain Storage Zones" added by Ord. 1259, provisions eff. 2/4/05 was repealed by Ord. 1356, provisions eff. 12/21/07.]

Article 418
SIGNIFICANT HYDROLOGIC RESOURCES

Sections:

110.418.00	**Purpose**
110.418.05	**Applicability**
110.418.10	**Exemptions**
110.418.15	**Perennial Streams Buffer Areas**
110.418.20	**Critical Stream Zone Buffer Area Development Standards**
110.418.25	**Sensitive Stream Zone Buffer Area Development Standards**
110.418.30	**Special Review Considerations**
110.418.35	**Common Open Space Development**
110.418.40	**Modification of Standards**

Section 110.418.00 Purpose. The purpose of this article, Article 418, Significant Hydrologic Resources, is to regulate development activity within and adjacent to perennial streams to ensure that these resources are protected and enhanced. This article establishes standards for use of land in "critical stream zone buffer area" and "sensitive stream zone buffer area" to preserving and protecting perennial streams within Washoe County to implement a policy of “no net loss” of significant hydrological resource size, function and value. The purpose of requiring perennial stream buffer areas is to recognize that many uses directly adjacent to a hydrologic resource may compromise the integrity of the resource through various negative features endemic to the specific use. Negative activities in the buffer areas may impact the quality or quantity of the existing hydrology, soil characteristics, vegetation communities or topography thereby jeopardizing the resource’s functions. The intent of these regulations is to protect the public health, safety and welfare by:

(a) Preserving, protecting and restoring the natural functions of existing perennial streams in Washoe County;

(b) Reducing the need for the expenditure of public funds to remedy or avoid flood hazards, erosion, or other situations caused by inappropriate alterations of streams;

(c) Ensuring the natural flood control functions of perennial streams including, but not limited to, stormwater retention and slow-release detention capabilities are maintained;

(d) Ensuring stormwater runoff and erosion control techniques are utilized to stabilize existing stream banks, reduce downstream sediment loading, and ensure the safety of people and property;

(e) Ensuring the natural water quality functions of perennial streams including, but not limited to, pollution filtering, groundwater recharge, nutrient storage, nutrient recycling capabilities, and sediment filtering capabilities are not impacted by existing and proposed developments;

(f) Encouraging common open space developments to avail hazardous or environmentally sensitive areas, protect important habitat and open space areas, and minimize impacts on groundwater recharge areas;

(g) Establishing buffer areas around all significant hydrological resource areas to ensure the resource is not jeopardized or degraded by adjacent offsite development activity;

(h) Ensuring a no net loss of value, acreage and function of each different significant hydrological resources is adhered to; and

(i) Identifying, establishing and managing perennial streams as mitigation sites for destroyed or degraded hydrological resources.

[Added by Ord. 1112, provisions eff. 2/15/01.]

Section 110.418.05 Applicability. The provisions set forth in this article shall apply as follows:

(a) Area of Applicability. The provisions of Article 418 shall apply to all properties containing either perennial streams, or an established buffer area surrounding one of the perennial streams, as identified on Map 110.418.05.1, Significant Hydrologic Resources. All new development that requires permitting or review by the County shall be reviewed for compliance with the significant hydrologic resource standards. No variance to the significant hydrologic resource standards, pursuant to Article 804, Variances, shall be processed or approved. Refer to Section 110.418.40 Modification of Standards.

In determining the location of the above-designated streams, staff shall use:

(1) Published United States Geological Service (USGS) topographic maps, either in 7.5 minute or 15 minute series, to assist in the interpretation of location of significant hydrologic resources.

(2) A determination of the location of a perennial stream resulting from a delineation of wetlands and/or waters of the United States made by the United States Army Corps of Engineers under the provisions of Section 404 of the Federal Clean Water Act, shall be considered the perennial stream crossing any parcel of land.

(3) Field survey by land surveyor or professional engineer licensed and qualified to perform a survey.

(b) Relationship to Other Restrictions. The requirements established in this article are not intended to repeal, abrogate, supersede or impair any existing federal, state or local law, easement, covenant or deed restriction. However, if this article imposes greater or more stringent restrictions, the provisions of this article shall prevail. Specifically, if an applicant also acquires authorization under Section 404 of the Clean Water Act from the United States Army Corps of Engineers, the applicant shall meet any greater or more stringent restrictions set forth in this article in addition to and independent of the restrictions of such permit.

(c) Application of this Article to the Tahoe Planning Area. The provisions of this article may be waived by the Department of Community Development for

development in areas under the jurisdiction of the Tahoe Regional Planning Agency (TRPA) as long as "stream environment zones" are regulated by TRPA.

(d) Application of this Article to the Truckee River. The provisions of this article do not apply for development along the Truckee River from the California/Nevada state line to the terminus in Pyramid Lake.

(e) Application of this Article to the High Desert Planning Area. The provisions of this article do not apply for development in the High Desert planning area.

(f) Impact on Land Use Designations. The provisions of this article shall neither be used as justification for changing a land use designation nor be used to reduce the development density or intensity otherwise allowed by the land use designation of the property, subject to the provisions and limitations of this article.

Map 110.418.05.1

SIGNIFICANT HYDROLOGIC RESOURCES

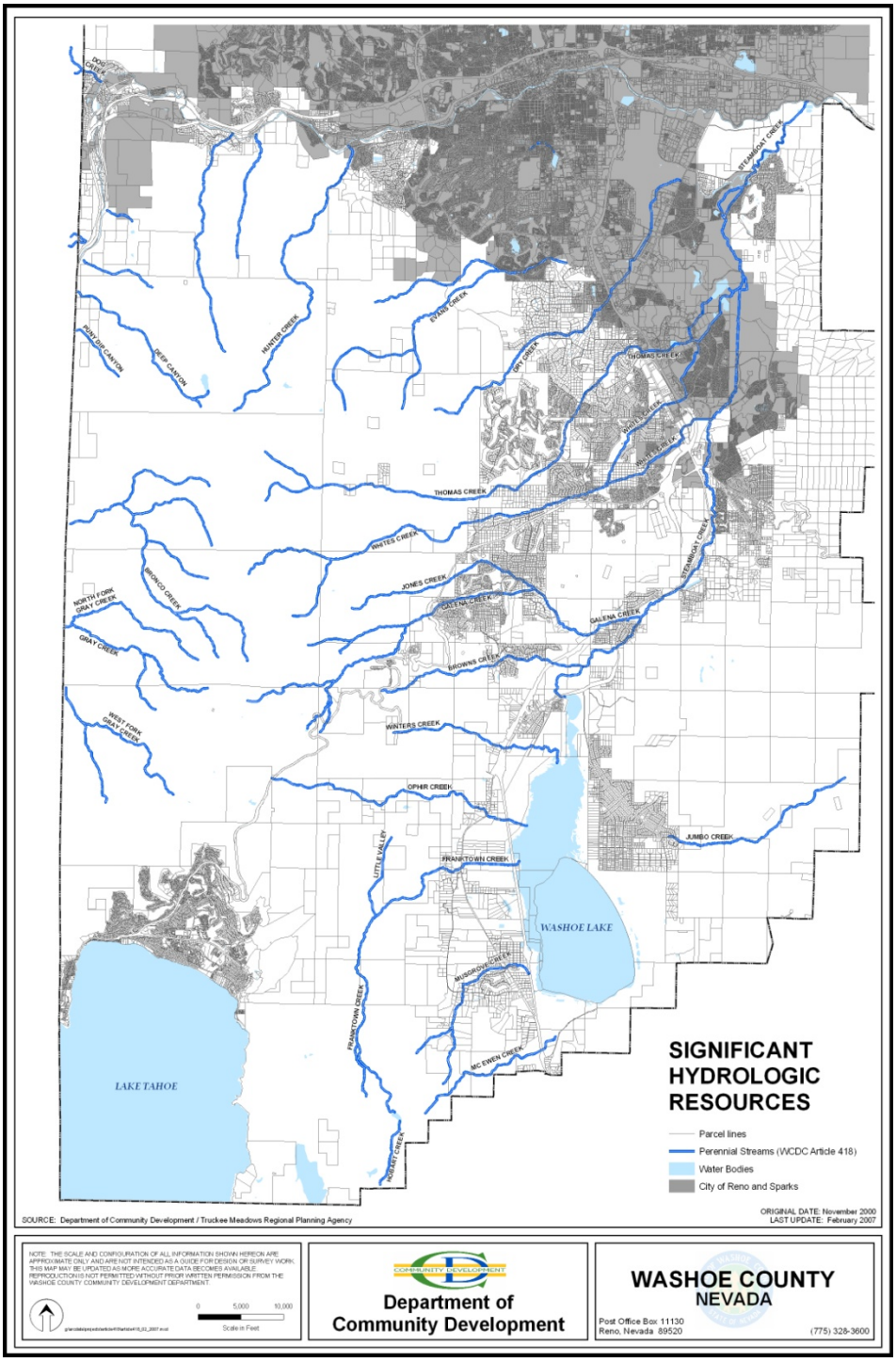

Source: Department of Community Development and Truckee Meadows Regional Planning Agency.

[Added by Ord. 1112, provisions eff. 2/15/01; graphic updated with Ord. 1378, provisions eff. 8/1/08.]

Section 110.418.10 Exemptions. The following are exempt from the provisions of this article:

(a) All existing allowable or permitted use of any single family, detached, residential structure, including interior renovation, and replacement upon catastrophic damaging event, and all related accessory uses (e.g. garages, barns, corrals, storage sheds) constructed or under construction with a valid building permit prior to (effective date of this ordinance).

(b) All projects with an approved special use permit, any map to divide land, design standards handbook and/or development agreement, currently active (not expired) and having obtained approval or having submitted a valid discretionary permit application prior to (effective date of this ordinance).

[Added by Ord. 1112, provisions eff. 2/15/01.]

Section 110.418.15 Perennial Streams Buffer Areas. Perennial stream buffer areas are established to provide adequate setbacks and land use controls to ensure water quality functions of each perennial stream are not jeopardized through development activity. To limit significant impacts adjacent to hydrological resources, two (2) buffer areas are hereby established—the "critical stream zone buffer area" and the "sensitive stream zone buffer area." All proposals to develop uses within the critical stream zone buffer area and/or the sensitive stream zone buffer area shall submit a site plan with precise dimensions depicting the boundary line for the buffer areas.

(a) Critical Stream Zone Buffer Area. The critical stream zone buffer area shall be all land and water surface within thirty (30) feet from the centerline of the perennial stream. The centerline of the stream shall be determined by either survey from a licensed surveyor or by determination of the thalweg (i.e. the line connecting points of maximum water depth) from a topographic survey, or appropriate USGS 7.5 minute topographic map covering the site.

(b) Sensitive Stream Zone Buffer Area. The sensitive stream zone buffer area shall be all land and water surface between the critical stream zone buffer area boundary of thirty (30) and one hundred fifty (150) feet from centerline or thalweg of the perennial stream.

[Added by Ord. 1112, provisions eff. 2/15/01.]

Section 110.418.20 Critical Stream Zone Buffer Area Development Standards. All development in the critical stream zone buffer area shall be subject to the following standards:

(a) Allowed Uses. Uses allowed within the critical stream zone buffer area are limited to those uses necessary for providing community services such as managing and conserving natural resources, and providing recreational and educational opportunities, including:

(1) Weed control consistent with state and County laws.

(2) Mosquito abatement consistent with state and County laws.

(3) Conservation or preservation of soil, water, vegetation, fish and other wildlife habitats.

(4) Outdoor recreation activities such as fishing, bird watching, hiking and swimming.

(5) Education and scientific research including, but not limited to, water quality monitoring and stream flow gauging.

(6) Maintenance of an existing public or private road, driveway, structure or facility, including drainage facilities, water conveyance structures, dams, fences, trails, and any public or private utility facility used to provide transportation, electric, gas, water, telephone, telecommunication, or other including individual service connections. Written notice shall be provided to the Department of Community Development at least fifteen (15) days prior to the commencement of work, and all impacts to the critical stream zone buffer area are minimized and disturbed areas are immediately restored to their natural state.

(7) Landscape improvements and maintenance of native vegetation is allowed within an established critical stream zone buffer area including the pruning of trees and the removal of dead vegetation and debris. Ornamental landscaping that would require fertilizer or pesticide applications for growth and maintenance is not permitted within the critical stream buffer zone area.

(8) Landscaping area requirements in accordance with Article 412, Landscaping, may be satisfied by using the natural, undisturbed or restored critical stream zone buffer area to count towards the required area to be landscaped for new residential, civic, commercial, industrial or agricultural use types. Parking and loading areas on the developed portion of the site shall continue to require landscaping. Open space requirements in accordance with Article 432, Open Space Standards, may be satisfied by using the natural, undisturbed or restored critical stream zone buffer area.

(9) Continuation of existing agricultural operations such as the cultivation and harvesting of hay or pasturing of livestock, or change of agricultural practices such as the relocation of an existing pasture fence, which has no greater impact on perennial stream water quality.

(10) Perimeter fencing on a property boundary with a valid building permit pursuant to approval by the County Engineer to ensure that obstruction to stream flows has been avoided.

(b) <u>Permitted Uses Requiring a Board of Adjustment Approved Special Use Permit Subject to the Provisions of Article 810, Special Use Permits.</u> Subject to the regulatory zone in effect for the property establishing the uses as specified in Article 302, Allowed Uses, the following use types may be permitted in the critical stream zone buffer area pursuant to a special use permit being issued by the Washoe County Board of Adjustment according to the provisions of Article 810, Special Use Permits, and this article. Any construction in the critical stream zone buffer area will require submission of a grading plan showing compliance with applicable best management practices as defined by the Washoe County Department of Public Works to minimize stream bank and stream bed erosion. The grading plan shall also be designed to prevent construction drainage and

materials from increasing sedimentation impacts to the stream environment and to minimize impervious surfaces.

(1) Construction or enlargement of any public or private roads, driveway, structure or facility including drainage facilities, water conveyance structures, dams, trails and any public or private utility facility used to provide transportation, electric, gas, water, telephone, telecommunication or other services.

(2) Civic Use Types. Civic uses classified under the utility services, nature center, active recreation, passive recreation and safety services use types may be permitted in the critical stream zone buffer area.

(c) Prohibited Uses. Due to the incompatible nature of certain uses (i.e. ground disturbance, untreated water discharge, hazardous materials, chemical contamination, scale of use, traffic, etc.) and the potential negative impacts on the perennial stream and adjoining critical stream zone buffer area, all new construction and development uses not listed in either the allowed or permitted section of this article shall not be established in the critical stream zone buffer area.

(1) Residential, Civic, Commercial, Industrial and Agricultural Use Types. All new residential, civic, commercial, industrial and agricultural use types not listed as allowed or permitted uses are prohibited in the critical stream zone buffer area. Specifically prohibited industrial uses include:

(i) Aggregate facilities - permanent.

(ii) Aggregate facilities - temporary.

(iii) Energy production.

(iv) General industrial - heavy.

(v) Inoperable vehicle storage.

(vi) Mining operations.

(vii) Salvage yards.

(viii) Wholesaling, storage and distribution - heavy.

(2) Parking and Ornamental Landscaping. All new parking and ornamental landscaping areas to fulfill the minimum requirements for new residential, civic, commercial, industrial or agricultural use types shall be prohibited in the critical stream zone buffer area.

(3) Fences. In order to prevent livestock from destroying the stream bank slope, all new perpendicular-oriented fences except as provided in Section 110.418.20(a)(10) shall be prohibited in the critical stream zone buffer area. Fencing that is parallel to the stream and is designed to keep livestock from access to the water and stream bank may be permitted after review and approval by the Department of Community Development.

[Added by Ord. 1112, provisions eff. 2/15/01, amended by Ord. 1378, provisions eff. 8/1/08.]

Section 110.418.25 Sensitive Stream Zone Buffer Area Development Standards. All development in the sensitive stream zone area shall be subject to the following standards:

(a) Allowed Uses. All allowed uses within the critical stream zone buffer area are also allowed in the sensitive stream zone buffer area. Additional allowed uses in the sensitive stream zone buffer area include:

(1) Single family, detached residential uses and all related accessory uses associated with the single family residence requiring a building permit issued by the Washoe County Building and Safety Department. Attached or detached accessory dwellings in conformance with Article 306, Accessory Uses and Structures, may also be erected within the sensitive stream zone buffer area. New building structures such as storage sheds and gazebos that, due to their minimum floor area, do not require a building permit issued by the Washoe County Building and Safety Department may also be erected within the sensitive stream zone buffer area.

(2) Landscaping area requirements in accordance with Article 412, Landscaping, including ornamental landscape planting, may be satisfied by using the sensitive stream zone buffer area to count towards the required area to be landscaped for new residential, civic, commercial, industrial or agricultural use types. Parking and loading areas on the developed portion of the site shall continue to require landscaping. Open space requirements in accordance with Article 432, Open Space Standards, may be satisfied by using the natural, undisturbed or restored sensitive stream zone buffer area.

(3) New fencing, constructed in accordance with Washoe County Code.

(b) Permitted Uses Requiring a Board of Adjustment Approved Special Use Permit Subject to the Provisions of Article 810, Special Use Permits. Subject to the regulatory zone in effect for the property establishing the uses as specified in Article 302, Allowed Uses, all new use types may be permitted in the sensitive stream zone buffer area pursuant to a special use permit being issued by the Washoe County Board of Adjustment according to the provisions of Article 810, Special Use Permits, and this article. The special use permit requirement is also applicable to construction or enlargement of any public or private roads, driveway, structure or facility including drainage facilities, water conveyance structures, dams, trails, and any public or private utility facility used to provide transportation, electric, gas, water, telephone, telecommunication or other services. New residential, commercial and industrial subdivisions processed in accordance with Article 608, Tentative Subdivision Maps, shall not require the concurrent processing of a special use permit, as long as the "Special Review Considerations" of this article are addressed in the tentative subdivision map review. Any construction in the sensitive stream zone buffer area will require submission of a grading plan showing compliance with applicable best management practices as defined by the Washoe County Department of Public Works to minimize stream bank and stream bed erosion. The grading plan shall also be designed to prevent construction drainage and materials from increasing sedimentation impacts to the stream environment and to minimize impervious surfaces.

(c) Prohibited Uses. Due to the incompatible nature of certain uses (i.e. ground disturbance, untreated water discharge, hazardous materials, chemical contamination, scale of use, traffic, etc.) and the potential negative impacts on the perennial stream and adjoining sensitive stream zone buffer area, the following uses shall not be established in the sensitive steam zone buffer area:

(1) Aggregate facilities - permanent.

(2) Aggregate facilities - temporary.

(3) Energy production.

(4) General industrial - heavy.

(5) Inoperable vehicle storage.

(6) Mining operations.

(7) Salvage yards.

(8) Wholesaling, storage and distribution - heavy.

[Added by Ord. 1112, provisions eff. 2/15/01, amended by Ord. 1378, provisions eff. 8/1/08.]

Section 110.418.30 Special Review Considerations. In addition to the findings required by Article 810, Special Use Permits, prior to approving an application for development in the critical stream zone buffer area or the sensitive stream zone buffer area, the record at the Board of Adjustment shall demonstrate that the following special review considerations are addressed:

(a) Conservation of topsoil;

(b) Protection of surface water quality;

(c) Conservation of natural vegetation, wildlife habitats and fisheries;

(d) Control of erosion;

(e) Control of drainage and sedimentation;

(f) Provision for restoration of the project site to predevelopment conditions;

(g) Provision of a bonding program to secure performance of requirements imposed; and

(h) Preservation of the hydrologic resources, character of the area and other conditions as necessary.

[Added by Ord. 1112, provisions eff. 2/15/01, amended by Ord. 1378, provisions eff. 8/1/08.]

Section 110.418.35 Common Open Space Development. New residential subdivision requests with a protected perennial stream on the property are encouraged to submit in accordance with the provisions of Article 408, Common Open Space Development. A tentative subdivision map that protects the critical stream and the sensitive stream zone buffer areas in a natural, undisturbed or restored state as part of the common open space area is presumed to

meet the required finding as specified in Article 608, Tentative Subdivision Map, Section 110.608.25(e) as follows:

> "Fish or Wildlife. That neither the design of the subdivision nor any proposed improvements is likely to cause substantial environmental damage, or substantial and avoidable injury to any endangered plant, wildlife or their habitat."

[Added by Ord. 1112, provisions eff. 2/15/01.]

Section 110.418.40 Modification of Standards. Modification of standards, including interpretation of the applicability of the standards in this section, shall be set forth as follows:

(a) Appeals for Errors. The Board of County Commissioners shall hear and decide appeals when it is alleged there is an error in any requirement, decision or determination. Appeals shall be processed under the provision of Article 810, Special Use Permits, Section 110.810.50, Appeals.

(b) Special Exceptions. The Board of County Commissioners shall hear and decide requests for special exceptions from the requirements of this article. In passing upon such applications, the Board of County Commissioners shall consider all technical evaluations and all relevant requirements, factors and standards specified in this article and shall also consider the provisions of this subsection:

(1) The potential degradation of the stream environment.

(2) The danger to life and property due to flooding or erosion damage.

(3) The loss of critical habitat.

(c) Issuance of Special Exception. Special exceptions shall only be issued when in compliance with the provisions of this section and the Board of County Commissioners finds:

(1) A showing of good and sufficient cause such as renovation, rehabilitation or reconstruction of the stream environment; or

(2) A determination that failure to grant the special exception would result in exceptional hardship to the applicant, such as deprivation of a substantial use of property and that the granting of a special exception will not result in degradation of the stream environment.

(d) Extent of Special Exception. Special exceptions shall only be issued upon a determination that the special exception is the minimum necessary to afford relief.

(e) Conditions of Special Exceptions. Upon consideration of the factors set forth in this section and the purpose of this article, the Board of County Commissioners may attach such conditions to the granting of special exceptions as it deems necessary to further the purpose of this article.

[Added by Ord. 1112, provisions eff. 2/15/01.]

Article 420
STORM DRAINAGE STANDARDS

Sections:

110.420.00	**Purpose**
110.420.05	**Applicability**
110.420.10	**Relation to Other Standards**
110.420.15	**Authorization of Alternative Standards**
110.420.20	**General Requirements**
110.420.25	**Other Improvements/Requirements (Public and Private)**
110.420.30	**Drainage Easements**
110.420.35	**Water Supply Ditches**
110.420.40	**Setbacks from Drainage Ways**

Section 110.420.00 Purpose. The purpose of this article, Article 420, Storm Drainage Standards, is to set forth standards for ensuring that both private and public development provides adequate protection for citizens and property, minimizes and controls erosion and pollution impacts on the natural environment, and minimizes maintenance costs for drainage and flood control systems within Washoe County.

[Added by Ord. 908, provisions eff. 10/15/94.]

Section 110.420.05 Applicability. Per Article 910, Section 110.910.10, any building or structure erected or maintained or any use of property contrary to the provisions of the Development Code (Chapter 110, in its entirety) shall be and is hereby declared to be unlawful and a public nuisance. This includes requirements and publications incorporated therein by reference. Responsibility for enforcement is adopted in Section 110.910.05 of the Development Code.

The provisions of this article shall apply to public and private improvements for projects including, but not limited to, the following:

(a) Projects that will require a Drainage Report:

(1) Public Works projects;

(2) Subdivisions; and subdivisions utilizing a grading permit;

(3) Projects in, containing or abutting a floodplain or Critical Flood Zone 1, stream, lake or major drainage facility; and

(4) Other projects as required by the County Engineer.

(b) Projects that may require a Drainage Report:

(1) Parcel Maps;

(2) Projects requiring a special use permit;

(3) Projects requiring a building permit; and

(4) Projects requiring a grading permit.

[Added by Ord. 908, provisions eff. 10/15/94; Amended by Ord. 1425, provisions eff. 1/22/10.]

Section 110.420.10 Relation to Other Standards. The standards set forth in this article make reference to and shall be used in conjunction with the *Standard Specifications for Public Works Construction* and *Standard Details for Public Works Construction*, American Association of State Highway Transportation Officials (AASHTO) guidelines, the Truckee Meadows Regional Drainage Manual, Truckee Meadows Construction Site Best Management Practices Handbook, Truckee Meadows Structural Controls Design Manual and the Truckee Meadows Low Impact Development Handbook, latest editions.

[Added by Ord. 908, provisions eff. 10/15/94; Amended by Ord. 1425, provisions eff. 1/22/10.]

Section 110.420.15 Authorization of Alternative Standards. In instances where unique situations necessitate the application of storm drainage and flood control designs and systems not provided in this article, the following provisions shall apply:

(a) Accepted Engineering Practices. Any storm drainage or flood control systems not allowed by these standards shall be designed in accordance with accepted engineering practices, the *Standard Specifications for Public Works Construction*, and the *Standard Details for Public Works Construction*, and shall be subject to the approval of the County Engineer.

(b) Alternative Standards. The County Engineer may, at his or her discretion, authorize alternative standards not covered in this article, subject to the following:

(1) The alternative standards shall be the equivalent of the design requirements as set forth in this code; and

(2) The alternative standards shall not be used for purposes of mere convenience or economy and the alternative must have equal or better function, quality, and safety.

[Added by Ord. 908, provisions eff. 10/15/94; Amended by Ord. 1425, provisions eff. 1/22/10.]

Section 110.420.20 General Requirements. The requirements set forth in this section shall apply to all development subject to this article.

(a) The Truckee Meadows Regional Drainage Manual shall be the basis for all drainage design unless it is in conflict with this article, in which case the criteria in this article shall apply.

(b) Off-site Stormwater Discharge. Discharge of the 100-year storm waters into a major drainage facility or natural water course shall not contribute to increasing the existing peak flow of storm drainage runoff in the drainage facility or natural water course. A major drainage facility is a channel or drainage way that has a drainage basin of one hundred (100) acres or more.

(c) On-Site Facilities. All drainage relating to the proposed development shall be collected on-site by facilities to accommodate, at a minimum, the storm drain

waters for the 5-year return storm flow, both entering the site and generated on-site. The drainage shall be piped in accordance with County standards to an existing adequate public storm drain system, major drainage facility, natural water course, or a permanent surface drainage easement capable of conveying the drainage flows.

(1) Where by reason of terrain or other circumstances the County Engineer determines that piping storm drain waters is inappropriate or unnecessary, alternative methods may be approved in lieu of piping, including methods pursuant to the provisions set forth in Section 110.420.15 to facilitate transporting such waters; and

(2) Easements to access and accommodate storm waters flowing across private property shall be provided as set forth in Section 110.420.35.

(d) Natural Water Facilities. Development of property shall not adversely affect any natural drainage facility or natural water course, and shall be subject to the following provisions:

(1) Natural facilities shall remain in as near a natural state as is practicable, with any modification proposed, including any erosion mitigating measures, addressed in the Drainage Report and drainage plans; and

(2) Be in compliance with Development Code Article 418, Significant Hydrologic Resources.

(e) Flood Storage Zones. Development of property shall not adversely affect the flood storage zones and shall be in compliance with Development Code Article 416, Flood Hazards, and the Critical Flood Storage Ordinance.

(f) Detention. On-site detention requirements for the 5-year and 100-year storms are as follows:

(1) For a 5-year storm, detention of the difference in peak runoff between the developed and undeveloped conditions shall be required; and

(2) For a 100-year storm, detention of the difference in peak runoff between the developed and undeveloped conditions shall be required.

(g) Erosive Soils/Sediment Control. Design of drainage systems in erosive soils may require the following in order to protect against plugging of the drainage system and to minimize maintenance as determined by the County Engineer:

(1) Construction of sedimentation basins: The design shall calculate the annual sediment yield (in tons and cubic yards) from all on-site and off-site contributing areas. The calculation for sediment yield can be done using the Revised Universal Soil Loss Equation (RUSLE) or other methods acceptable to the County Engineer;

(2) Oversizing of storm drain pipes and ditches;

(3) Steepening of pipe and channel grades;

(4) Use of self-cleaning channel lining; and

(5) Rear-yard landscaping.

(h) Low Impact Development (LID) Handbook. Use of the LID Handbook is encouraged to the maximum extent practicable and should be complementary with Article 420, Storm Drainage Standards. The following are exceptions to the LID Handbook:

(1) Porous pavement cannot be used for construction of County streets.

(2) LID improvements cannot be used in lieu of curb and gutter, unless specifically approved by the County Engineer.

(3) LID features on individual residential lots cannot be considered to reduce calculated stormwater flows unless directed to a central LID collection feature that is maintained by a Homeowners Association (HOA) or other acceptable maintenance organization.

(4) LID features shall not cause damage to County owned pavement section or other facilities.

(5) LID facilities shall be maintained by HOA's or other approved responsible private party.

(i) Wetlands. When the U.S. Army Corps of Engineers (C.O.E.) has determined there are wetlands on a proposed site, a wetlands delineation map approved by the C.O.E. must be submitted to the Department of Community Development and the County Engineer. Any construction proposed in the wetland will require a permit from the C.O.E. with a copy provided to the County Engineer prior to construction.

(j) Waters of the State of Nevada. Any work which requires fill intended to be placed within the "Waters of the State of Nevada" shall receive permission from the State Division of Environmental Protection prior to beginning construction. The County Engineer shall receive a copy of this permission prior to issuance of any permit.

(k) Construction within a 100-Year Floodplain. Embankments and other structures shall not be placed within a 100-year floodplain, as determined by the most recent hydrologic study acceptable to the County Engineer, or of a major drainage facility without prior approval by the County Engineer. Where such approval is granted, embankments and structures shall be constructed in accordance with the standards outlined in Section 110.416.70. Development within areas shown on the Flood Insurance Rate Map (FIRM) shall comply with Article 416, Flood Hazards.

(l) Discharge Across Property Lines. Surface drainage from any developed area shall not cross any property line except by way of a natural watercourse, major drainage facility, approved drainage system within a public storm drain easement, or permanent surface drainage easement. The manner of discharge shall be approved by the County Engineer and the discharge must produce no significant adverse impacts to the downhill property. Surface flows should cross a property line within historic drainage ways and in a similar manner and quantity (or less) as the predeveloped conditions.

(m) Extension of Storm Drain Facilities. Storm drain facilities shall be extended from within a development to adjacent undeveloped properties for future extensions in accordance with approved drainage plans.

(n) Adjoining Property Surface Drainage. Existing surface drainage from adjoining property shall be perpetuated through a development unless other means of disposal acceptable to the County Engineer are used.

(o) Irrigation Waters. Irrigation waters not controlled by a ditch or utility company and storm drain waters shall be conveyed by separate systems.

[Added by Ord. 908, provisions eff. 10/15/94. Amended by Ord. 1022, provisions eff. 7/1/98; Ord. 1425, provisions eff. 1/22/10.]

Section 110.420.25 Other Improvements/Requirements (Public and Private).

(a) Minimum Pipe Diameter. Minimum pipe diameter for any public storm drain shall be twelve (12) inches.

(b) Maintenance Access Roads. Access roads in a minimum easement width of twenty (20) feet shall be constructed in accordance with Development Code Article 436, Street Design Standards, when required by the County Engineer.

(c) Corrugated Metal Pipe. Corrugated metal pipe is not acceptable for use in County-owned storm drain systems.

(d) Storm Water Piping. Storm drains to a major drainage facility shall extend, in the direction of flow, at a minimum, to the 100-year flood line and be rip rapped from the outlet to the bottom of the channel. Channel modifications for erosion control shall be designed so that the receiving channel or entering channel will contain the flows without erosion. Channel alignment geometry shall minimize the depositing of stormwater sediment.

(e) Overland Flow. Overland flow shall be provided for and channeled to County standards within dedicated easements or public rights-of-way to protect structures from flooding during storms that exceed the 5-year storm, up to and including the 100-year storm.

(f) Public Drainage Facilities. Constructed public drainage facilities with design flows of sixty (60) cubic feet per second or less shall be piped in accordance with County standards. Constructed drainage facilities with flows exceeding sixty (60) cubic feet per second may be open channel construction in accordance with County standards, when approved by the County Engineer.

(g) Piping in County Right-of-Way. The storm drain piping contained within County right-of-way shall be a minimum of Reinforced Concrete Pipe (RCP) Class III or the appropriate class when design requires a higher pipe support strength. Thermoplastic pipe with a minimum pipe stiffness of 46 psi or the appropriate class or stiffness when design requires a higher pipe support strength is allowed when installed and tested in accordance with procedures in the Standards Specifications for Public Works Construction (Orange Book).

(h) Headwalls. Standard headwalls or flared end sections shall be placed on the inlet and outlet of all public pipe and culverts. Pipes up to and including seventy-

two (72) inches in diameter shall comply in all cases with County design, size and material standards. Headwalls for pipes exceeding seventy-two (72) inches require special design approved by the County Engineer.

(i) Trash Racks. Trash racks shall be provided at the upper end of all closed public conduits as approved by the County Engineer.

(j) Interceptor Swales. Paved interceptor swales, as per Washoe County *Standard Details for Public Works Construction*, shall be provided along the top of retaining walls and cut slopes to intercept drainage. When required by the County Engineer, paved swales shall be provided to intercept drainage from adjacent property.

(k) Manholes. Manholes for public improvements shall be located at junction points, at changes in horizontal or vertical alignment exceeding the maximum allowable pipe deflection, at changes in conduit size, and at the end of public lines, unless otherwise approved by the County Engineer.

(1) When permitted by the County Engineer, pipe placed on curves (horizontal and vertical) shall meet manufacturer's recommendations for curved alignment.

(2) All curves, radii, length of pipe joints, and types of pipe shall be shown on the plans.

(3) Manholes shall be spaced at intervals not greater than three hundred (300) feet unless otherwise approved by the County Engineer.

(l) Catch Basins. Catch basins are to be designed and located in accordance with the following criteria:

(1) Catch basins shall be installed at low points of vertical curves, at all major street intersections where appropriate, and at sufficient intervals to intake the peak flow for the 5-year return storm runoff, such that flows will not interfere with traffic or flood adjoining property;

(2) Laterals from catch basins are to tie into manholes in the direction of the flow (catch basins shall not tie into each other unless otherwise approved by the County Engineer);

(3) Oil Socks, or an approved equal, shall be installed within all catch basins to provide pre-treatment for petrochemicals;

(4) Sheet flow across intersections is not permitted; and

(5) "Bubble up" type outlet basins are not permitted.

(m) Drainage Facilities Crossing Under County Roadways. Drainage structures crossing under County roadways shall be designed to pass the 100-year storm flow resulting from a fully developed condition within the watershed. A depressed roadway section, or alternative route as approved by the County Engineer, shall be provided in the event stormwater flows overtop the roadway.

(n) Valley Gutters. Reinforced concrete valley gutters for public improvements may be placed at street intersections only when approved by the County Engineer, and shall not be placed transverse to collector and arterial streets.

(o) Floodplains. Embankment shall not be placed within the 100-year flood plain of a major drainage facility without prior approval by the County Engineer. Where such approval is given, the embankment shall be faced with rip rap or an approved lining designed for velocity to a minimum of one (1) foot above the 100-year flood line. Development within areas shown on the Flood Insurance Rate Map (FIRM) shall comply with Article 416, Flood Hazards.

(p) Sump Conditions. Sump conditions within streets shall require paved overland concrete swales in drainage easements and a storm drain system for conveyance of storm water.

(q) Lot Drainage Swales. Lot drainage swales on private property shall be provided in accordance with the provisions of this subsection.

(1) Surface drainage swales collecting runoff from the area of two (2) or more lots are to be paved in accordance with County standards and are to be maintained and perpetuated by the property owners. Paving is not required for common side lot swales serving only two (2) adjacent lots.

(2) Standard lot line drainage swales are to be designed to carry the waters generated by a 100-year storm with a maximum six (6) lots contributing run-off to the swale. Discharge from swales shall be conveyed to a public drainage facility. Should it be necessary to provide for drainage from more than six (6) lots and/or to exceed the maximum horizontal or vertical alignment, a modified design capable of conveying the run-off from the 100-year storm may be submitted for review by the County Engineer.

(3) Easement requirements for lot drainage swales shall be established as a note on the official plat which reads: "A five (5) foot private drainage easement shall be located along all side and rear lot lines."

[Added by Ord. 908, provisions eff. 10/15/94. Amended by Ord. 1023, provisions eff. 7/1/98; Ord. 1022, provisions eff. 7/1/98. Renumbered from 110.420.35 and renamed from "Design/Improvement Requirements" amended by Ord. 1425, provisions eff. 1/22/10.]

Section 110.420.30 Drainage Easements. Easements shall be provided in accordance with the provisions set forth in this section.

(a) Maintenance Access. Drainage easements with improved vehicular access in accordance with County standards shall be provided to publicly and privately owned storm drain manholes, storm drain inlets and outlets, ditches and associated structures not located within an improved street section. The portion of the easement used for vehicular access shall be a minimum of twenty (20) feet or as determined by the County Engineer.

(b) Easement Widths. Storm drain easements for public and private improvements shall be a minimum width of twenty (20) feet. The easement width shall be determined by pipe or ditch width, required trench clearance, and excavated

trench side slopes not less than one horizontal to one vertical (1:1), and as approved by the County Engineer.

(c) Private Property. Storm drainage easement(s) will be required for storm waters generated within the boundaries of a development that discharge onto or across private property. If the storm drain waters generated within the boundaries of a development discharge from a public drain system onto or across private property, a permanent easement for access and maintenance shall be created from the property boundary to the point of discharge into an existing public storm drain system, major drainage facility, or natural water course. Improvements to County standards shall be required and the County Engineer shall determine if the easement(s) are to be accepted for maintenance.

(d) 100-Year Floodplain. Easements for access to, and maintenance of, the 100-year storm floodplain associated with a major drainage facility or natural water course shall be provided. Improved vehicular access in accordance with County standards shall be provided when determined necessary by the County Engineer.

[Added by Ord. 908, provisions eff. 10/15/94. Renumbered from 110.420.40 and renamed from "Easements" amended by Ord. 1425, provisions eff. 1/22/10.]

Section 110.420.35 Water Supply Ditches. Water supply ditches shall be designed in accordance with the conditions set forth in this section.

(a) Public and Private Storm Drainage Runoff. No discharge of runoff from a public or private storm drain into a water supply ditch shall be allowed unless otherwise approved by the ditch or utility company and the County Engineer. Post development sheet flow into a water supply ditch shall not exceed pre-development sheet flow.

(b) Access. Where water supply ditches are located within or adjacent to a proposed development, access and maintenance of the ditch shall not be hindered.

(c) Improvements within Easements. Any improvements within the ditch company's easements are subject to the ditch company's approval.

(d) Ditch or Watercourse Hazard. Fencing is required in accordance with Development Code Section 110.610.30(f).

[Added by Ord. 908, provisions eff. 10/15/94. Renumbered from 110.420.45 and amended by Ord. 1425 provisions eff. 1/22/10.]

Section 110.420.40 Setbacks from Drainage Ways.

(a) The following minimum setbacks for structures shall be maintained from the centerline of drainage ways which are not classified as perennial streams:

(1) Fifteen (15) feet from the centerline of incidental drainage ways [drainage area less than one thousand (1,000) acres].

(2) Twenty-five (25) feet from the centerline of secondary drainage ways [drainage area one thousand (1,000) to five thousand (5,000) acres].

(3) Fifty (50) feet from the centerline of major drainage ways [drainage area greater than five thousand (5,000) acres].

(b) The setbacks may be modified upon submission and approval of plans for construction of improvements to drainage ways in question. Improvements shall provide capacity within drainage ways for the free unobstructed passage of the required flood flow quantity as determined by an approved hydrologic/hydraulic analysis.

(c) The County Engineer may require that any such improvement conform to any master plan of drainage as may be presently or hereafter adopted by Washoe County.

[Section 110.420.40, was added by Ord. 1500, provisions eff. 11/2/12; the above language was originally added to Article 438, Grading Standards, Section 110.438.90 by Ord. 1236, provisions eff. 5/21/04.]

[Section 110.420.25, Drainage Report Contents, and Section 110.420.30, Site Drainage and Grading Plans, deleted by Ord. 1425, provisions eff. 1/22/10; Section 110.420.40, Setbacks from Drainage Ways, added by Ord. 1500, provisions eff. 11/2/12.]

Article 422
WATER AND SEWER RESOURCE REQUIREMENTS

Sections:

110.422.00	**Purpose**
110.422.01	**Exceptions**
110.422.05	**Applicability**
110.422.10	**Water Resources**
110.422.15	**Water Rights Satisfaction**
110.422.20	**Authority to Utilize Dedicated Water Rights and Collect Administrative Fees**
110.422.25	**Water Facilities**
110.422.30	**Contracts for Water Rights and Water Facilities**
110.422.35	**Sanitary Sewer Facilities**
110.422.40	**Facility Standards**

Section 110.422.00 Purpose. Except as set forth below, the purpose of this article, Article 422, Water and Sewer Resource Requirements, is to control the practices and procedures related to the dedication of water resources, water delivery facilities, and sanitary sewer collection facilities for all types of development in the unincorporated portion of the County to insure water supply and sewage treatment to adequately protect the public health and safety.

[Amended by Ord. 1026, provisions eff. 7/1/98.]

Section 110.422.01 Exceptions. The provisions of this article do not apply to development within the Tahoe planning area and receiving water and sewer service from any water and/or sewer provider operating within the Lake Tahoe Hydrographic Basin.

[Amended by Ord. 1026, provisions eff. 7/1/98.]

Section 110.422.05 Applicability. The provisions of this article shall apply to all permits, approvals or development projects of any kind in the County which require the use of water resources, require water supply delivery, or require sewage treatment. Adequate water resources are required for all new development, including:

(a) Subdivisions with Individual Wells. Subdivision and parceling of land creating new parcels of forty (40) acres or less, with the potential to be served by individual domestic wells, except that new parcels larger than forty (40) acres may be required to have adequate water resources if a water budget has been adopted for the groundwater basin by the County Commission;

(b) Subdivisions with Community Water Systems. Subdivision and parceling of land creating new parcels of forty (40) acres or less, with the potential to be served by a community water system;

(c) Residential Development. Development creating new residential dwellings, including multi-family dwelling units and mobile home dwelling units;

(d) Non-Residential Development. Development creating new commercial, industrial or civic buildings or uses; and

(e) Other Development. Development requiring any other permit or approval with the exception of a building permit for a single residence on an existing lot recorded prior to the effective date of Washoe County Ordinance Number 586, which is January 10, 1984.

[Amended by Ord. 876, provisions eff. 7/7/93.]

Section 110.422.10 Water Resources. The development owner or property owner shall be required to dedicate to Washoe County, as a condition precedent to the permit or approval, any water rights reasonably necessary to insure an adequate water supply for the intended or permitted use. The amount of water rights necessary shall be determined by the Washoe County Department of Water Resources, Utility Services Division, and the State Engineer. In the event the state and the County have different requirements under this section, both the County and state requirements, and the most stringent of the two, must be satisfied. The development owner or property owner shall be required to have sufficient water rights transferred to each water well or delivery system.

Section 110.422.15 Water Rights Satisfaction. The dedication of water rights and facilities required by this article will be satisfied if the development owner or property owner enters into an agreement with the County, secured by a performance bond or other undertaking acceptable to the County. The agreement must constitute a binding offer to dedicate, conditioned only upon failure to receive final project approval or, in cases where a building permit is the only approval needed, failure to receive a building permit for the project. No building permit or recordation of a subdivision map shall be granted until dedication is accepted or an agreement conforming to this section has been accepted by the Washoe County Commission. The Department of Water Resources, Utility Services Division, will evaluate the water rights offered for dedication based on, but not limited to, the following criteria:

(a) Adequacy of Amount. The adequacy of the amount of water resources offered for dedication to the County for the intended use;

(b) Proximity of Source. The proximity of the hydrologic basin or source of water offered for dedication to the County for the intended use;

(c) Proof of Ownership. Valid proof of ownership, including a chain of title to the original water right holder, for the water rights offered for dedication to the County;

(d) Status of Water Right. The priority and yield of the water right, the current manner and place of use, and the status of the permits or certificates issued by the State Engineer, or the status of the water right established in a court decree, which are offered for dedication to the County; and

(e) Point of Diversion. The ability of the County to obtain from the State Engineer the necessary permits to change the point of diversion, and the manner and place of use of the water right for the intended use.

[Amended by Ord. 876, provisions eff. 7/7/93.]

Section 110.422.20 Authority to Utilize Dedicated Water Rights and Collect Administrative Fees. The Department of Water Resources, Utility Services Division, or any other appropriate County department, division or agency, may:

(a) Applications to State Engineer. File applications with the State Engineer's Office to change the point of diversion, and the manner and place of use of the dedicated water rights to put the water resources to beneficial use and to otherwise utilize and maintain the validity of the dedicated water rights; and

(b) Applicants Responsibilities. Require the development owner or property owner to:

(1) Pay all State Engineer's Office application fees to transfer the dedicated water rights to the proposed delivery facilities;

(2) Allow County personnel to enter the property in order to read water meters on all wells and delivery facilities, or perform other related inspections as necessary;

(3) Comply with the terms of the water right permits or certificates as issued by the State Engineer's Office; and

(4) Pay reasonable administrative fees and services fees to read and maintain water meters or carry out other activities as necessary to maintain the validity of the dedicated water right. Fees required under this subsection shall be adopted in the special ordinances governing water service.

[Amended by Ord. 876, provisions eff. 7/7/93.]

Section 110.422.25 Water Facilities. The development owner or property owner shall be required to dedicate any facilities for water treatment, supply, storage, transmission and distribution, and appurtenances such as wells, pipelines, pumps and storage tanks located within or outside the property boundary or subdivision which are necessary to insure an adequate water supply to a project or development. This section applies to facilities that will be constructed to serve a project or development, except:

(a) Single-Family Dwelling. Facilities to serve one single-family dwelling in an existing subdivision;

(b) Previous Facilities. Facilities which were previously constructed to serve existing users; and

(c) Utility Facilities. Facilities, whether new or existing which are enlarged or improved in order to serve the proposed development or subdivision, which were owned and operated by a utility on the effective date of Washoe County Ordinance Number 586 dated January 10, 1984, operating under a certificate of public convenience and necessity issued by the Nevada Public Service Commission.

[Amended by Ord. 876, provisions eff. 7/7/93.]

Section 110.422.30 Contracts for Water Rights and Water Facilities. The Water Resources Department, Utility Services Division, may enter into contracts, subject to approval of the Washoe

County Commission, permitting the use of the dedicated water rights and facilities by other governmental entities, public and private utilities, and any other persons engaged in providing water service.

Section 110.422.35 Sanitary Sewer Facilities. The development owner or property owner shall be required to dedicate any facilities for sewage collection, treatment and disposal, and appurtenances such as pipelines and pumps located within or outside the property boundary or subdivision which are necessary to insure adequate sanitary sewer collection and disposal to a project or development. This section applies to facilities that will be constructed to serve a project or development, except:

(a) Single-Family Dwelling. Facilities to serve one single-family dwelling in an existing subdivision;

(b) Previous Facilities. Facilities which were previously constructed to serve existing users; and

(c) Utility Facilities. Facilities, whether new or existing which are enlarged or improved in order to serve the proposed development or subdivision, which were owned and operated by a utility on the effective date of Washoe County Ordinance Number 586 dated January 10, 1984, operating under a certificate of public convenience and necessity issued by the Nevada Public Service Commission.

Section 110.422.40 Facility Standards. The following standards apply to all water delivery and sanitary sewer collection facilities:

(a) Design. The facilities offered for dedication or subject to a dedication agreement must be designed and constructed in accordance with standards and other requirements established by ordinance or recommended by the Department of Water Resources, Utility Services Division, as a condition of either project approval or the issuance of a building permit. Standards and other requirements may include plan checking, design review, inspections, systems testing and other matters to be determined by the Department of Water Resources, Utility Services Division.

(b) Required Dedications and Acceptance. The facilities required to be dedicated shall be determined by the Department of Water Resources, Utility Services Division. The Department of Water Resources, Utility Services Division, will accept a dedication pursuant to this section if the facilities conform to the requirements of this section and perform as designed.

(c) Issuance of Permits. Except for permits issued for the construction of facilities to be dedicated, no building permit or special use permit may be issued and no other administrative approval may be granted until the dedication is accepted or an agreement conforming to this article has been executed. Unless issued for the construction of a facility to be dedicated, any permit or approval for which application has been made subsequent to the effective date of Washoe County Ordinance Number 586, which is January 10, 1984, and issued prior to the dedication is void.

[Amended by Ord. 876, provisions eff. 7/7/93.]

Article 424
HILLSIDE DEVELOPMENT

Sections:

110.424.00	**Purpose**
110.424.05	**Applicability**
110.424.10	**Exemptions**
110.424.15	**Application Requirements and Procedures**
110.424.20	**Determination of Developable Area**
110.424.25	**Protected Open Space Areas**
110.424.30	**Site Development Standards**
110.424.35	**Grading and Drainage Standards**
110.424.40	**Vegetation Preservation and Restoration Standards**
110.424.45	**Street Standards**
110.424.50	**Fire Safety Standards**

Section 110.424.00 Purpose. The purpose of this article, Article 424, Hillside Development, is to regulate hillsides in a manner different from regulation of flat terrain. This article establishes provisions for developing, preserving and protecting hillsides and ridgelines within Washoe County. The intent of these regulations is to protect the public health, safety and welfare by:

(a) Minimizing use of slopes subject to instability, erosion, landslide, flood hazards or drainage problems;

(b) Minimizing the careless alteration of and disruption to the natural topography and landscape;

(c) Providing safe and adequate vehicular and pedestrian access to and within hillside areas, including emergency access;

(d) Establishing stormwater runoff and erosion control techniques to minimize adverse water quality impacts resulting from non-point runoff;

(e) Encouraging innovative grading techniques and building design which respond to the hillside terrain and natural contours of the land;

(f) Minimizing impacts on existing trees and vegetation which reduce erosion, stabilize steep hillsides, enhance visual quality, protect water quality and preserve critical watershed recharge areas;

(g) Encouraging the transfer of density to avoid hazardous areas and to protect environmentally sensitive and open space areas; and

(h) Minimizing impacts on prominent ridgelines, significant viewsheds, canyons and visually prominent rock outcroppings which reflect the visual value and scenic character of hillside areas.

[Added by Ord. 893, provisions eff. 3/4/94.]

Section 110.424.05 Applicability. The provisions set forth in this article shall apply as follows:

(a) Hillside and Ridgeline Development. This article applies to all new development that requires permitting or review by the County and meets the following criteria:

(1) Properties containing slopes in excess of fifteen (15) percent or greater on 20 percent or more of the site.

(b) Relationship to Other Articles. The requirements established in this article shall supplement requirements found in other articles of the Washoe County Development Code. If the provisions of this article are in conflict with other statutes, ordinances or regulations, the more stringent limitation or requirement shall prevail to the extent of the conflict.

(c) Application of this Article to the Tahoe Planning Area. The provisions of this article may be waived by the Director of Community Development for development in areas under the jurisdiction of the Tahoe Regional Planning Agency (TRPA).

[Added by Ord. 893, provisions eff. 3/4/94.]

Section 110.424.10 Exemptions. The following use types are exempt from the provisions of this article:

(a) Residential Use Types. The following residential use types are exempt from the provisions of this article:

(1) Minor subdivisions as specified in Article 606, Parcel Maps, are exempt from the provisions of this article with the exception of Section 110.424.45, Street Standards. The exemption of minor subdivisions applies only to the first parcel map on any one parcel. Any subsequent divisions on the original or newly created parcels are not exempt from the provisions of this article.

(2) A parcel entitled to one dwelling unit legally recorded as of January 18, 1994, the adoption date of this article.

(3) All existing tentative maps and phased final maps, currently unexpired and having obtained preliminary approval prior to January 18, 1994, the adoption date of this article, are exempt from the provisions of this article.

(4) All projects with an approved design standards handbook and/or development agreement, currently unexpired and having obtained preliminary approval prior to January 18, 1994, the adoption date of this article, are exempt from the provisions of this article.

(b) Civic Use Types. Uses classified under the parks and recreation use type are exempt.

(c) Commercial Use Types. Uses classified under the nursery sales use type are exempt.

(d) Industrial Use Types. Uses classified under the mining operations use type, excluding aggregate mining operations, and addressed under the provisions of Article 334, Mining, are exempt.

(e) Agricultural Use Types. Uses classified under the animal production, crop production, forest products, game farms, and produce sales use types are exempt.

(f) Open Space Regulatory Zones. Uses classified under the open space regulatory zone are exempt.

[Added by Ord. 893, provisions eff. 3/4/94.]

Section 110.424.15 Application Requirements and Procedures. Supplemental to all other application requirements found in the Washoe County Development Code, the following submittals shall be required for all hillside development:

(a) Site Analysis. A site analysis, prepared by a qualified engineer, planner, landscape architect or architect shall be submitted. This analysis shall provide the basis for assessing the opportunities and constraints of the site for development and shall be in the form of a design standards handbook incorporating both textual and graphical representations of the requested action. At a minimum, a site analysis shall indicate:

(1) Major topographic conditions including ridgelines, ravines, canyons and knolls;

(2) Preliminary geological conditions including major rock outcroppings, slide areas and areas underlain with faults that have been active during the Halocene epoch of geological time;

(3) Preliminary soil conditions including soil type, expansiveness, slumping, erodibility and permeability;

(4) Significant surface hydrological conditions including natural drainage courses, perennial streams, floodplains, wetlands and ponding areas;

(5) The location and types of significant vegetation including known rare and endangered plant species and general plant communities;

(6) Habitat areas for rare or endangered animal species;

(7) Preliminary viewshed analysis including cross sections of views to and from the development site from all major roadways within one (1) mile of the project site, and from major focal points on the project site;

(8) How the development responds to the unique conditions of the hillside; and

(9) A slope analysis, submitted on a topographic map with contour intervals of at least five (5) feet for planning purposes. This analysis shall indicate the location and amount of land included within the following slope categories, tabulated in acres:

(i) 0 - 15 percent;

(ii) 15 - 20 percent;

(iii) 20 - 25 percent;

(iv) 25 - 30 percent; and

(v) Greater than 30 percent.

(b) Developable Area Map. A developable area map, prepared pursuant to Section 110.424.20(b).

(c) Constraint and Mitigation Analysis. A detailed analysis of how the identified constraints will be mitigated and incorporated into the project's design.

(d) Washoe County Master Plan Amendment. All applicants proposing a hillside development requiring a Washoe County Master Plan amendment shall enter into a development agreement with Washoe County pursuant to Article 814, Development Agreements. Supplemental to all other requirements, development agreements for hillside development shall contain the following:

(1) Agreement by the applicant to seek a Washoe County Master Plan amendment;

(2) Agreement by Washoe County to process a Washoe County Master Plan amendment request pursuant to the requirements listed in Article 820, Amendment of Master Plan;

(3) Site analysis as required under Section 110.424.15(a);

(4) Developable area analysis as required under Section 110.424.20; and

(5) Calculation and location of density being proposed.

(e) Detailed Contour Analysis. As determined through a pre-application meeting between the applicant and the Department of Community Development, a topographic map with more or less detailed contour intervals may be required by the Director of Community Development for design purposes.

[Added by Ord. 893, provisions eff. 3/4/94; Ord. 1447, provisions eff. 9/9/10.]

Section 110.424.20 Determination of Developable Area. To determine the location and amount of land suitable to support development, a developable area analysis is required on a hillside property.

(a) Purpose. The purpose of identifying the developable area of a hillside is to designate those areas suited for development and construction as evidenced by soils, geotechnical, biological and hydrological investigations and studies. A developable area analysis is required to ensure that the proposed project complies with the intent, standards and requirements of this article.

(b) Developable Area Map. The developable area analysis shall be in the form of a developable area map; shall be drawn at a scale appropriate to the project; shall

identify the location and amount of total land area suitable for development pursuant to Section 110.424.20(c); and shall be prepared by a qualified engineer, planner, landscape architect or architect.

(c) Determination of Developable Area. Areas considered less suitable for development include:

(1) Slopes greater than thirty (30) percent, based on a slope analysis pursuant to Section 110.424.15(a);

(2) Areas of landslides or landslide potential;

(3) Areas underlain with faults that have been active during the Halocene epoch of geological time;

(4) Habitat areas of known rare or endangered plant or animal species; and

(5) Significant streams, ravines and drainageways.

(d) Exceptions. Development shall be permitted within areas of a hillside property considered less suitable for development by the Director of Community Development due to extenuating circumstances, provided the applicant can demonstrate that:

(1) The purposes of this article will not be compromised;

(2) Unstable slopes proposed for development will be sufficiently stabilized;

(3) Areas of landslide or landslide potential proposed for development will be stabilized;

(4) Earthquake resistant structures will be constructed on development sites proposed on potential earthquake areas;

(5) Areas of rare and endangered animal or plant habitat proposed for development will be relocated and mitigation measures adhered to; and

(6) Significant ridgelines, rock outcroppings, canyons and landforms will be protected to the greatest extent possible.

[Added by Ord. 893, provisions eff. 3/4/94.]

Section 110.424.25 Protected Open Space Areas. Any portion of a hillside development which has been deemed unsuitable for development pursuant to Section 110.424.20(c) shall be designated as permanent open space and shall be subject to the following provisions:

(a) Permitted Uses. Uses permitted within the permanent open space areas shall be those that are directly related to the open space function of the land, are necessary to provide community services, or are necessary for the health, safety or welfare of the public. The following uses and facilities shall be permitted in the permanent open space areas:

(1) Paved and unpaved pedestrian, equestrian and bicycle paths and trails;

(2) Outdoor recreational uses and facilities such as golfing, skiing, fishing, hunting, boating, swimming, horseback riding, nature observation, community parks and picnic areas;

(3) Roads, bridges and culverts for vehicles, pedestrians, bicyclists or equestrians used to provide access to permitted open space uses or to developable areas, pursuant to Section 110.424.20(b);

(4) Installation, maintenance and operation of typical utilities; and

(5) Dams, swales, detention ponds and impoundment areas, wetlands and wetlands mitigation sites, and other structures necessary to prevent flooding and erosion, and to protect water quality.

(b) Land Restriction. A deed restriction, easement, offer of dedication, or other conveyance describing limitations placed on the permanent open space areas of the property shall be recorded concurrent with the issuance of a development permit. The restriction shall include provisions for the management and maintenance of the property.

[Added by Ord. 893, provisions eff. 3/4/94.]

Section 110.424.30 Site Development Standards. This section sets forth development standards to address the physical and technical conditions unique to hillside and ridgeline property. In case of conflict between the provisions of this section and those of any other section of the Washoe County Development Code, the provisions of this section shall prevail unless otherwise determined by the Director of Community Development, County Engineer, or designated staff from the appropriate fire protection agency.

(a) Building Location. The following standards are intended to encourage compatibility between development and the existing hillside and vegetation character:

(1) Structures should be located on the natural slope of the land rather than on man-made pads and terraces as shown in Figure 110.424.30.1;

(2) Structures should be located in such a manner so as to retain or enhance views, particularly views from public places as identified in the required viewshed analysis pursuant to Section 110.424.15(a) and individual residential dwelling units;

(3) Development clusters shall be permitted, where appropriate, to preserve natural features, reduce grading and impervious surface area, increase usable open space areas, and preserve views of the hillsides;

(4) The character and profile of the hillside should be preserved by using existing, disturbed areas for building envelopes rather than undisturbed areas; and

(5) For projects with multiple buildings, structures should be sited in staggered arrangements and height variation to minimize a "walled" effect.

(b) Building Design. The following standards are intended to encourage building design that is compatible to the character of hillsides and ridgelines and minimize alteration of the natural landforms:

(1) Split-pad and stepped foundation shall be encouraged so that buildings step-down or step-up with the natural slope to avoid padding and terracing as shown in Figure 110.424.30.2;

(2) The use of decks and small patios shall be encouraged to reduce the amount of grading;

(3) Structures shall be designed to blend into the natural character of the hillside by reducing the visual bulk through landscaping, terraced building forms and height variations; and

(4) A series of smaller, visually distinct roofs, specifically pitched, gabled and hipped roofs, shall be encouraged to reflect the visual diversity of the natural hillsides.

(c) Building Height. Buildings shall not exceed the maximum allowable height standards established in Article 402, Density/Intensity Standards.

(d) Yards. The following standards are intended to ensure sloped yards are adequately maintained by the dwelling unit physically and visually accessing them:

(1) Cut or fill slopes should be designed such that they are visible from the residence on the property in which they are located as shown in Figure 110.424.30.3. This will encourage property owners to stabilize, maintain and treat slopes to prevent erosion.

(2) Slopes adjacent to a roadway should be designed and maintained in a uniform manner.

(3) To promote creative site planning design, residential yard requirements as established in Article 406, Building Placement Standards, may be reduced by the Director of Community Development provided the applicant can demonstrate that the reduction:

(i) Does not diminish solar access to the primary living space or yard area of an adjoining residence;

(ii) Does not block views from adjoining lots and streets beyond that which would have occurred without the reduced yard allowance; and

(iii) Is consistent with the natural hillside character.

(e) Parking and Sidewalks. The following standards are intended to ensure safe and adequate access to residential hillside development areas and to minimize the width of hillside roadways where feasible and as appropriate:

(1) On lots fronting a street with on-street parking prohibited on both sides of the street, one (1) additional off-street parking space shall be provided per unit;

(2) The width of a driveway at curb cut shall not exceed twenty four (24) feet, and the distance between two (2) or more curb cuts on the same property shall be at least twenty (20) feet;

(3) To reduce the number of curb cuts, amount of grading, impervious surface area, and site disturbance, use of common driveways shall be encouraged by the Director of Community Development, provided that a common easement maintenance agreement is secured; and

(4) Tandem parking may be permitted by the Director of Community Development provided that the applicant can demonstrate that such configuration will reduce the amount of grading.

(f) Lot Configuration. The following standards are intended to ensure platting of new lots which reflect the natural character of hillside properties as shown in Figure 110.424.30.4:

(1) Stable and sufficiently usable areas of land for development shall be provided for each created lot;

(2) Building envelopes, disturbed areas and areas to remain undisturbed for each created lot shall be shown on the tentative and final maps;

(3) Reasonably safe and adequate access from public streets without requiring massive grading or substantial vegetation removal shall be required for each created lot; and

(4) Lot patterns which offer a variety of configurations shall be encouraged.

(g) Fences and Walls. The following standards are intended to minimize the visual effect of excessive fencing and retaining walls in hillside and ridgeline development:

(1) Multiple retaining walls shall be separated horizontally by a distance equal to at least the height of the lower retaining wall; and

(2) A series of smaller retaining walls shall be encouraged rather than one (1) large, uninterrupted wall.

(h) Significant Natural Features. Significant natural features shall be protected and preserved where appropriate and feasible including, but not limited to, ridgelines, canyons, ravines, streams and creeks, natural drainages and rock outcroppings.

(i) Open Space and Recreational Trails. Open space areas and recreational trails provided as part of a hillside development proposal shall be consistent with the adopted Washoe County policies and regulations for open space and recreational trails.

Figure 110.424.30.1

BUILDING LOCATION STANDARDS

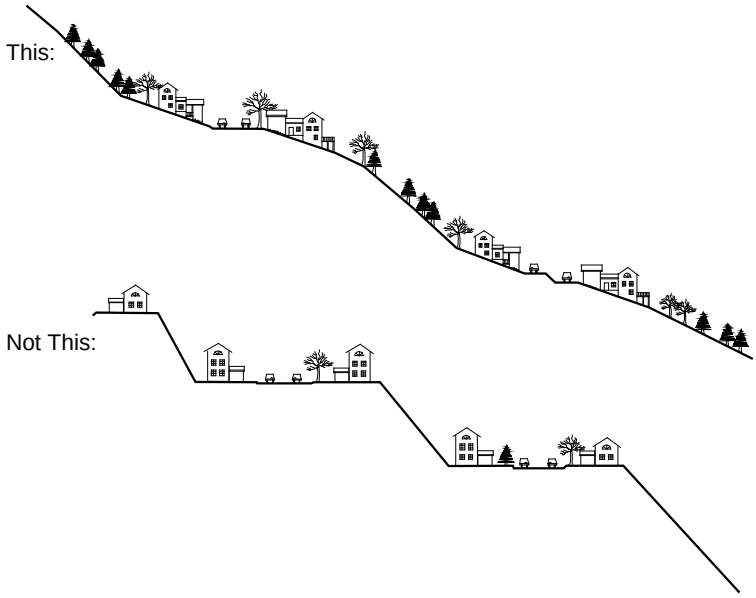

Note: Encourage use of natural slope; discourage cut and fill development.

Source: Washoe County Department of Community Development.

Figure 110.424.30.2

EXAMPLE OF SPLIT PAD AND STEPPED FOUNDATION DESIGN

Source: Washoe County Department of Community Development.

Figure 110.424.30.3

SLOPE OWNERSHIP

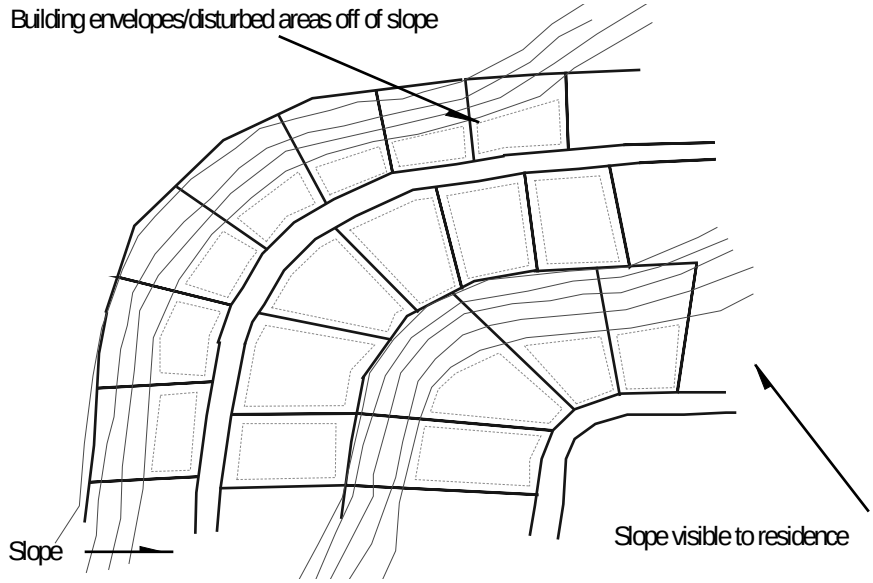

Note: Slopes visible from residence on property ensures slope maintenance.

Source: Washoe County Department of Community Development.

Figure 110.424.30.4

BUILDING LOCATION STANDARDS

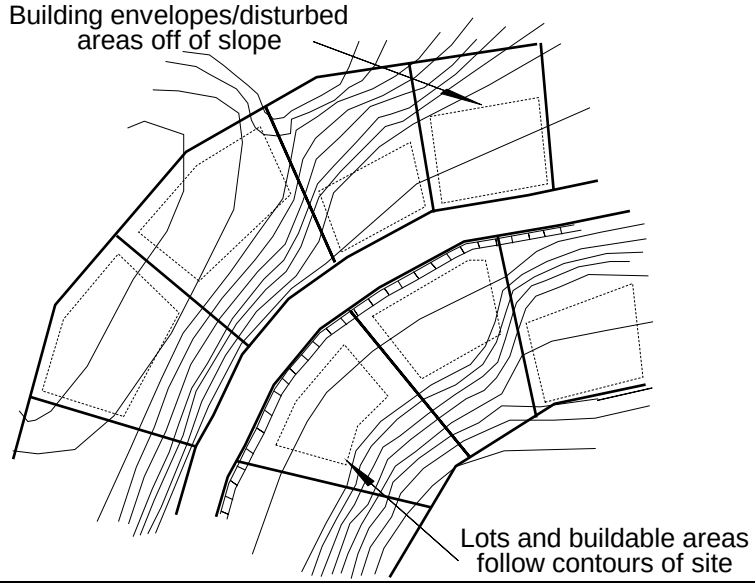

Source: Washoe County Department of Community Development.

[Added by Ord. 893, provisions eff. 3/4/94.]

Section 110.424.35 Grading and Drainage Standards. This section sets forth development standards for grading and drainage of hillside and ridgeline properties.

(a) Grading. These grading standards are applicable to hillside and ridgeline development only if a special use permit for grading is required pursuant to Washoe County Ordinance 811. The following standards are intended to preserve natural topographic features, foster resource preservation and minimize degradation of the visual character of hillsides:

(1) Grading shall relate to the natural topography with the natural topography maintained to the greatest extent possible;

(2) Where alteration to the natural topography is necessary, graded slopes shall be contoured to provide a smooth and gradual transition of grading and natural slopes, while maintaining the basic character of the terrain;

(3) Standard pad grading or terracing which results in grading outside the building footprint and access area shall be discouraged;

(4) Grading of knolls, ridgelines or toes of slopes shall be rounded to conform with the natural grade and to provided a smooth transition to the natural slope;

(5) Grading shall create varying gradients in order to avoid a "manufactured" appearance;

(6) Grading in environmentally sensitive habitat areas shall occur only when necessary to protect, maintain, enhance or restore the habitat; and

(7) A slope stability and scarring mitigation plan, certificated by the project engineer, shall be reviewed and approved by the Director of Community Development and the Public Works Department prior to initiation of grading.

(b) Drainage and Erosion Control. All hillside development shall satisfy current Washoe County Code for drainage and erosion control.

[Added by Ord. 893, provisions eff. 3/4/94.]

Section 110.424.40 Vegetation Preservation and Restoration Standards. This section sets forth development standards to ensure maximum preservation and restoration of existing trees and vegetation on hillsides and ridgelines, reduce damage from sediment and runoff, improve wildlife habitat, and retain the desirable qualities of hillsides.

(a) Existing Native Trees and Vegetation. Existing native trees and vegetation shall be retained and integrated into the site development plan to the maximum extent feasible so as to maintain the natural surface drainage system, protect and preserve ecological communities, and enhance the natural scenic and visual quality.

(b) Disturbed Areas. Where existing trees or plants have been removed from hillside or ridgeline properties, the following standards shall apply:

(1) Existing vegetation shall not be destroyed, removed or disturbed more than fifteen (15) days before grading is scheduled to begin; and

(2) All graded or disturbed areas, exposed slopes and areas of soil or landform disturbance not designated for development shall be revegetated and replanted immediately after grading in order to mitigate adverse visual impacts, improve soil conditions, minimize erosion and stabilize necessary cut and fill slopes with plant roots.

[Added by Ord. 893, provisions eff. 3/4/94.]

Section 110.424.45 Street Standards. This section sets forth development standards to ensure streets and roadways are adequate for serving the unique conditions of hillside areas.

(a) Applicability. Street standards for hillside and ridgeline properties shall be subject to the provisions of Article 436, Street Design Standards, and be in accordance with a detailed geotechnical engineering investigation that provides recommendations for the following:

(1) Design of cut and fill slopes;

(2) Design of roadway drainage systems;

(3) Protection of slopes from erosion;

(4) Pavement and structural design; and

(5) Construction procedures and methods to be used during site grading and roadway construction.

(b) Standards Waiver. The street standards in Article 436, Street Design Standards, may be modified for hillside development if the geotechnical investigation indicates that other roadway cross sections are more suitable for the proposed development. Any modifications to the standards must be designed in accordance with Washoe County Codes and to the satisfaction of the Director of Community Development, County Engineer and staff from the appropriate fire protection agency.

[Added by Ord. 893, provisions eff. 3/4/94.]

Section 110.424.50 Fire Safety Standards. This section sets forth development standards to minimize the potential of fire spread and ensure fire safety to hillside areas through the provision of adequate water supply and sources, fuel breaks and fire-resistant landscaping.

(a) Water Provisions. The applicant shall demonstrate that adequate fire line water supply, flow and pressure are available and consistent with standards established by the appropriate fire protection agency, and that all applicable fire hydrant requirements have been fulfilled.

(b) Building Materials. Fire retardant roofing and decking shall be required.

(c) Fuel Breaks. Fuel breaks shall be provided to reduce the risk of spread of wildfire and the opportunity of ignition, and to assure emergency access to the hillside development. The fuel breaks shall be established around all buildings

and community facilities, and at appropriate intervals and locations within a hillside development in order to provide safer access for fire fighting and to reduce the rate of fire spread, as follows:

(1) The perimeter of all buildings shall be cleared of underbrush and excess vegetation;

(2) Lot size and building placement shall allow adequate clearance of hazardous flammable vegetation; and

(3) Fuel breaks shall allow safe access for fire-fighting personnel and equipment.

(d) Fire-Resistant Planting. In high-risk fire areas, the following standards shall apply:

(1) Existing fire-resistant and fire-retardant plants shall be retained where feasible;

(2) The use of fire-resistant and fire-retardant plants shall be encouraged, and the use of highly flammable plants shall be prohibited;

(3) New trees shall be planted at least fifteen (15) feet from existing and proposed structures. Where this setback is infeasible due to yard requirements or other physical constraints, the use of fire-resistant trees shall be required;

(4) Trees shall be pruned such that no dead branches or foliage extend lower than six (6) feet above finished grade or within ten (10) feet of a chimney; and

(5) Yard areas shall be regularly maintained to remove excessive dry wood, debris, weeds and other highly flammable materials.

[Added by Ord. 893, provisions eff. 3/4/94.]

Article 426
SCENIC AREAS

This section reserved for future ordinance.

Article 428
ALTERNATIVE ENERGY DEVELOPMENT INCENTIVES

This section reserved for future ordinance.

Article 430
RIVER CORRIDOR DEVELOPMENT

This section reserved for future ordinance.

Article 432
OPEN SPACE STANDARDS

Sections:

110.432.00	**Purpose**
110.432.05	**Applicability**
110.432.10	**Residential Private Open Space**
110.432.15	**Residential Common Open Space**
110.432.20	**Commercial Open Space**
110.432.25	**General Standards**
110.432.30	**Pedestrian Access and Circulation**
110.432.35	**Environmentally Sensitive Habitat**

Section 110.432.00 Purpose. The purpose of this article, Article 432, Open Space Standards, is to establish regulations to develop, preserve and protect recreational and environmentally sensitive open space areas within Washoe County. The intent of these regulations is to protect the public health, safety and welfare by:

(a) Protecting existing, and providing new, recreation and scenic areas for the use and enjoyment of residents and visitors;

(b) Establishing usable space and facilities for outdoor living and recreation;

(c) Encouraging open space buffers and greenbelt areas to help define boundaries between development areas, communities or neighborhoods so that all development does not run together in a suburban sprawl pattern; and

(d) Protecting environmentally sensitive habitat.

[Added by Ord. 949, provisions eff. 5/1/96.]

Section 110.432.05 Applicability. This section sets forth the application provisions of this article.

(a) Application.

(1) This article, except for Sections 110.432.20, Commercial Open Space, and 110.432.35, Environmentally Sensitive Habitat, shall apply to all new multi-family development and the expansion of multi-family development except for those uses which are classified as follows:

(i) Group home land use types; and

(ii) Child care land use types.

(2) Section 110.432.20, Commercial Open Space, shall apply to commercial land uses.

(3) Section 110.432.35, Environmentally Sensitive Habitat, shall apply to all new development and the expansion of development.

(b) Duplicate Regulations. Unless otherwise specifically stated, if the provisions of this article are in conflict with other statutes, ordinances or regulations, the more stringent limitation or requirement shall prevail to the extent of the conflict.

[Added by Ord. 949, provisions eff. 5/1/96. Amended by Ord. 1485, provisions eff. 3/27/12.]

Section 110.432.10 Residential Private Open Space. This section sets forth development standards to provide sufficient and quality private open space for residential uses in Washoe County. These standards are intended to provide for the development and maintenance of private open space areas which serve the need for leisure, space and privacy.

(a) Types of Private Open Space. Private open space shall be comprised of one (1) or more of the following:

(1) Rear yard;

(2) Patio;

(3) Balcony;

(4) Deck; or

(5) Side yard (not at the zero setback).

(b) Requirement. The amount of private open space required per dwelling unit shall be as follows:

(1) Ground floor rear yards shall be at least four hundred (400) square feet;

(2) Ground floor patios shall be at least one hundred fifty (150) square feet; and

(3) Upper level balconies or decks shall be at least seventy (70) square feet.

(c) Minimum Dimension. The minimum dimension at any point of a private open space shall be as follows:

(1) Ground floor patio or deck shall be at least ten (10) feet wide; and

(2) Above- or below-ground floor balcony or deck shall be at least six (6) feet wide.

(d) Location. Private open space shall be located as follows:

(1) Private open space shall be adjacent to, and not more than four (4) feet above or below, the living units it serves except for rooftop private open space;

(2) Above-ground floor private open space shall not be located within five (5) feet of an interior side property line; and

(3) Below-ground floor private open space shall not be located within a required minimum front yard.

(e) Screening. Residential ground floor private open space shall be screened from adjoining incompatible uses and public rights-of-way pursuant to Article 412, Landscaping.

(f) Special Provisions for Rooftop Private Open Space. When private open space is located on a roof:

(1) Rooftop private open space shall be adjacent to, and not more than one (1) story above or below, the living units it serves;

(2) Adequate safety provisions, such as railings or other protective devices, shall be provided, and shall be constructed such that ladder-like use is impossible; and

(3) The area occupied by vents and other structures which do not enhance the usability of the space shall not be counted toward the required minimum square footage.

[Added by Ord. 949, provisions eff. 5/1/96.]

Section 110.432.15 Residential Common Open Space. This section sets forth development standards to provide sufficient and quality common open space for residential uses in Washoe County. These standards are intended to provide for the development and maintenance of common open space areas which serve the need for leisure, space and recreation.

(a) Types of Common Open Space. Common open space may be comprised of one (1) or more of the following:

(1) Courtyard;

(2) Large lawn area;

(3) Playground;

(4) Tennis court;

(5) Basketball court;

(6) Swimming pool; and

(7) Similar outdoor recreation facilities as approved by the Director of Community Development.

(b) Requirement. At least two hundred (200) square feet of common open space shall be required per dwelling unit for developments of twelve (12) or more units.

(c) Location. Common open space shall be located as follows:

(1) The space shall be accessible to all the living units it serves; and

(2) Not more than twenty (20) percent of the required space may be located on the roof of any building, attached garage or carport.

[Added by Ord. 949, provisions eff. 5/1/96.]

Section 110.432.20 Commercial Open Space. This section sets forth development standards to provide sufficient and quality open space for commercial uses in Washoe County. These standards are intended to provide for the development and maintenance of public open space areas for the use and enjoyment by workers, residents and visitors.

(a) Types of Commercial Open Space. Commercial open space shall be comprised of one (1) or more of the following:

(1) Plaza;

(2) Park;

(3) Garden;

(4) View/sun terrace;

(5) Greenhouse;

(6) Atrium;

(7) Galleria;

(8) Arcade; or

(9) Similar open space as approved by the Director of Community Development.

(b) Requirement. All commercial uses shall provide usable public open space in an amount proportional to the building size as follows:

(1) For every one hundred (100) gross square foot of non-residential floor area, at least one (1) square foot of public open space shall be provided; and

(2) Residential floor area shall be excluded for calculation purposes; however, the requirements set forth in Sections 110.432.10, Residential Private Open Space, and 110.432.15, Residential Common Open Space, shall apply to the residential portion of a mixed-use development.

(c) Minimum Dimension. The minimum dimension at any point of a commercial public open space area shall be fifteen (15) feet.

(d) Location. Commercial public open space shall be located on the same site as the building or on private or public property within five hundred (500) feet of the building.

(e) Standards. Commercial open space shall be:

(1) Located in such a manner as to provide easy, safe and convenient access to the general public;

(2) Landscaped and, where appropriate, furnished with a display of public art;

(3) Protected from excessive heat, wind and sunlight;

(4) Well lit, if intended for nighttime use;

(5) Open to the general public at times when it is reasonable to expect public use;

(6) Designed for user safety and security; and

(7) Maintained at no public expense.

[Added by Ord. 949, provisions eff. 5/1/96.]

Section 110.432.25 General Standards. This section sets forth standards to ensure the usability of all required open space.

(a) Excluded Areas. The following areas shall not be counted toward the required amount of private or common open space:

(1) Hallways;

(2) Entrances;

(3) Front porches;

(4) Off-street parking and loading areas;

(5) Driveways; and

(6) Loading and service areas.

(b) Surface Material. The surface material shall allow convenient and safe use for outdoor activity and shall consist of any practicable combination of turf, landscaping, flagstone, wood planking, concrete, asphalt, decomposed granite or other serviceable surfacing.

(c) Maintenance. The property owner, or his/her designee, shall permanently maintain all private open space associated with his/her property.

[Added by Ord. 949, provisions eff. 5/1/96.]

Section 110.432.30 Pedestrian Access and Circulation. This section sets forth development standards to allow public access to public open space areas, while protecting the established rights of private property owners.

(a) Pedestrian Access and Circulation Plan. All development subject to this section shall provide for pedestrian access and circulation consistent with provisions set

forth in the appropriate area plan contained in Volume Two: Area Plans of the Master Plan.

(b) Development Standards. The following development standards shall apply to all required access:

(1) The edge of all access easements shall be at least twenty-five (25) feet from any existing or proposed residence to provide separation between pedestrian access points and circulation routes, and to protect the privacy and security of residents and homes;

(2) Access easements shall be at least ten (10) feet wide and shall include a minimum four (4) foot wide trail;

(3) Access through environmentally sensitive habitat areas shall comply with the provisions established in Section 110.432.35, Environmentally Sensitive Habitat;

(4) Access improvements such as trails, ramps, railings, viewing areas, restrooms and parking facilities shall be sited and designed to be compatible with the natural character of the surrounding landscape, and to be accessible to people of limited mobility to the maximum extent feasible; and

(5) Access signs shall identify access location, destination areas, environmentally sensitive habitat and hazardous conditions, and shall be compatible with the natural character of the surrounding landscape by using appropriate color, size, form and material.

[Added by Ord. 949, provisions eff. 5/1/96. Amended by Ord. 1447, provisions eff. 9/9/10.]

Section 110.432.35 Environmentally Sensitive Habitat. This section sets forth development standards to preserve environmentally sensitive habitat resources in Washoe County.

(a) Required Survey. A habitat survey, prepared by a qualified biologist or botanist, may be required to determine the exact location of environmentally sensitive habitat areas and to recommend mitigation measures that address potential impacts to the habitat. This survey shall be submitted to the Director of Community Development for all new development that meets one (1) of the following criteria:

(1) The project site is located within a habitat area of a threatened and endangered fauna or flora species identified in Appendix A of the Conservation Element of the Master Plan, or through on-site investigation and review of resource information; or

(2) The project site is or may be located within one hundred (100) feet of a threatened and endangered fauna or flora species identified in the Conservation Element of the Master Plan, and/or has the potential to negatively impact the long-term maintenance of such habitat.

(b) Survey Contents. All habitat surveys shall include, at a minimum, the following information:

(1) Survey methodology;

(2) Location map and topographical site plan indicating all existing and proposed structures and roads;

(3) Any rare and/or endangered plant and animal species, including the habitat envelope and the number of species observed;

(4) Delineation of all wetlands, streams and water bodies;

(5) Direct threats to habitat resulting from new development;

(6) Delineation of a habitat buffer area to be provided along the periphery of the primary habitat; and

(7) Mitigation measures to reduce impacts and to allow for the long-term maintenance of environmentally sensitive habitats.

(c) Development Standards. The following standards are intended to protect, maintain, enhance and restore sensitive fauna and flora habitat:

(1) No new development shall be permitted within a recognized primary habitat area of an endangered species.

(2) Limited new development may be permitted within a recognized habitat buffer area, as defined in the required habitat survey, subject to the following standards:

(i) Public access shall be limited to low-intensity recreational, scientific or educational uses, provided that it is strictly managed, controlled and confined to designated trails and paths;

(ii) During breeding season, public access and construction activities shall be prohibited or controlled as recommended in the habitat survey;

(iii) Alteration of the natural topography shall be discouraged;

(iv) Runoff and sedimentation shall not adversely affect habitat areas;

(v) Alteration of landscaping shall be discouraged unless the alteration is associated with restoration and enhancement of the habitat;

(vi) Where required, necessary permits shall be obtained from the Nevada Department of Wildlife and/or the United States Fish and Wildlife Service;

(vii) All portions of the buffer shall be protected pursuant to Article 424, Hillside Development;

(viii) Contiguous open space adjacent to habitat shall be encouraged;

(ix) Potential impacts identified in the habitat survey shall be mitigated to a level of insignificance where feasible; and

(x) Mitigation measures identified in the habitat survey shall be made conditions of project approval where necessary to mitigate impacts.

[Added by Ord. 949, provisions eff. 5/1/96. Amended by Ord. 1447, provisions eff. 9/9/10.]

Article 434
REGIONAL DEVELOPMENT STANDARDS WITHIN COOPERATIVE PLANNING AREAS AND ALL OF WASHOE COUNTY

Sections:

110.434.00	**Introduction**
110.434.05	**Purpose**
110.434.10	**Applicability**
110.434.15	**Definitions**
110.434.20	**Density**
110.434.25	**Lot Adjacency Standards**
110.434.30	**Ridgelines**
110.434.35	**Earthquake Fault Areas**

Section 110.434.00 Introduction. Subsequent to adoption of the updated 2002 Truckee Meadows Regional Plan, the Regional Plan Settlement Agreement Case No. CV02-03469 (hereinafter referred to as "settlement agreement") was reached that disposed of certain litigation over the Regional Plan and related matters. Among subsequent actions required by the settlement agreement was development of certain specific objective criteria that would establish findings necessary for zone changes within areas defined as "cooperative planning areas" in the Truckee Meadows. This is addressed in Article 822, Provisions for Amendments to Local Master Plans and Zone Changes in Areas Subject to Cooperative Planning Under the Regional Plan Settlement Agreement. The settlement agreement also required development of certain minimum development standards common throughout the entire cooperative planning area to minimize potential negative impacts of new development on existing development within the incorporated and unincorporated areas. These common minimum standards are addressed in this article. Together, Articles 434 and 822 are intended to promote effective implementation of the Truckee Meadows Regional Plan of 2002 by applying specific standards and criteria, and requiring findings during the local zoning and master plan amendment process. Principle #1 of the Regional Plan, adopted May 9, 2002, states that the plan:

> "*…aims to limit the spread of the urban footprint and direct more development of homes and jobs toward the traditional core of the region—its downtowns, its designated Regional Centers, and its traditional transportation corridors. This strategy will redirect growth that might otherwise occur at the urban fringe; make more efficient use of land, natural resources and community services; save money on infrastructure; reduce dependence on the private automobile; promote multi-modal transportation choices; protect air quality; conserve energy; preserve designated open space; and create more affordable communities. This strategy, which will result in a more compact form of future development, as well as a more diverse mix of uses, will provide a variety of living and working situations, and will promote human, natural and economic capital, strengthen our communities and ensure that the region's assets are accessible to all.*"

[Added by Ord. 1191, provisions eff. 3/21/03.]

Section 110.434.05 Purpose.

(a) Articles 434 and 822 are intended to implement certain portions of the October 17, 2002 Regional Plan Settlement Agreement and to function as the master documents for the settlement agreement. These standards will be on file with all settlement signatories and the Court.

(b) The cooperative planning criteria and development standards have been developed and implemented to provide better assurance to the communities and citizens as to what, where, when and how development will occur within their neighborhoods and to what standards or criteria these areas will be developed.

(c) For the full term of the 2002 Regional Plan, the codes of Reno, Sparks and Washoe County must contain all the provisions specified in Articles 434 and 822. Codes for any of these jurisdictions may exceed these requirements, but they shall contain no provisions that contradict or weaken the effect of these provisions. Any variance to the provisions contained within this article, including any proposed modifications pursuant to special use permit or other special exception, shall be processed only as specified in NRS 278.300 (1)(c) as that statutory provision is implemented in Article 110.804 of the Washoe County Development Code and [the] corresponding provisions of the City of Sparks and City of Reno codes. Specific Plans, Transit Oriented Development, Emerging Employment Centers, Planned Unit Development or any other area within the cooperative planning areas may not be exempted from these provisions. Neither the Regional Plan, nor any of the codes of the three jurisdictions, shall be amended in any way so as to negate the provisions of these articles during the term of the 2002 Regional Plan. Notwithstanding the above, any or all of these provisions may be amended through majority vote of each of the three local governing bodies.

[Added by Ord. 1191, provisions eff. 3/21/03.]

Section 110.434.10 Applicability. These standards apply for the entire term of the 2002 Regional Plan, are part of the settlement of litigation related to that plan, and may be amended only by agreement of all parties to that settlement.

(a) The standards established in Section 110.434.25 of this article relate to potential negative impacts that may occur at or near the interface between incorporated or extra territorial jurisdiction areas and unincorporated areas outside the spheres of influence. Accordingly, these standards apply only to:

(1) New development proposed in cooperative planning areas after October 17, 2002 within five hundred (500) feet of the existing built environment, or within five hundred (500) feet of platted lots.

(2) New development within unincorporated Washoe County within five hundred (500) feet of the existing built environment, or within five hundred (500) feet of platted lots.

(b) The standards established in Sections 110.434.20 and 110.434.35 of this article relate to impacts that can have a more wide-ranging impact on the entire existing developed community. These standards apply to all cooperative planning areas.

[Added by Ord. 1191, provisions eff. 3/21/03. Amended by Ord. 1236, provisions eff. 5/21/04.]

Section 110.434.15 Definitions. The definitions in Article 822 shall apply.

[Added by Ord. 1191, provisions eff. 3/21/03.]

Section 110.434.20 Density. To the extent that land in such areas affected by this standard would be buildable under federal, state or local regulations, the full eligible density may be utilized on other locations on the site. However, the codes of all entities must provide that:

(a) No density transfers may be allowed from lands that are otherwise undevelopable.

(b) Any land from which density is transferred in a subdivision map must be deed-restricted for open space, parks or recreational use with Washoe County and the applicable City as parties to the recorded restriction.

[Added by Ord. 1191, provisions eff. 3/21/03.]

Section 110.434.25 Lot Adjacency Standards. Lots proposed within a new subdivision that share a common property line with an established subdivision shall not contain structures that exceed the maximum height of the adjacent equivalent zoning district or land use district.

(a) Large Lot Single Family Residential to Large Lot Single Family Residential. To provide adequate transition between varying sizes of single-family residential parcels designated one (1) dwelling unit per five (5) acres to one (1) dwelling unit per acre, the minimum adjacent lot size shall be one (1) acre. In no instance will the depth of any proposed lot (the extent of that lot perpendicular to the boundary line) be less than two hundred (200) feet.

(b) Single Family Residential to Single Family Residential. To provide adequate transition between varying sizes of single-family residential parcels designated as one (1) unit per acre or greater density, one of the following methods shall be utilized:

(1) Parcel Size Matching. The minimum lot sizes identified in the land use designation of the immediately adjacent developed subdivision shall be maintained at the edge of the proposed subdivision as depicted in Figure 110.434.25.1. In no instance will the depth of any proposed lot (the extent of that lot perpendicular to the boundary line) be less than that of any existing lot to which it is adjacent.

Figure 110.434.25.1

PARCEL SIZE MATCHING

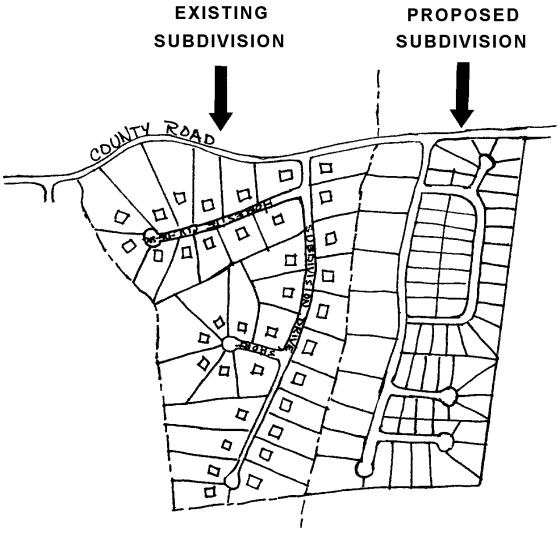

Source: Washoe County Department of Community Development.

Or

(2) Buffering. A “buffer zone” shall be established. When the buffer remains natural vegetation, the buffer zone shall be equivalent to two hundred (200) feet or the average minimum lot depth of the adjoining developed property, whichever is greater (see Figure 110.434.25.2). The buffer zone may be common open space for the proposed subdivision. This common open space may not contain above ground utility lines but may include paths, equestrian trails, trees or benches. The buffer area and amenities must be maintained by the homeowners association or a lighting and landscaping district established pursuant to NRS 278.478.

Figure 110.434.25.2

BUFFERING

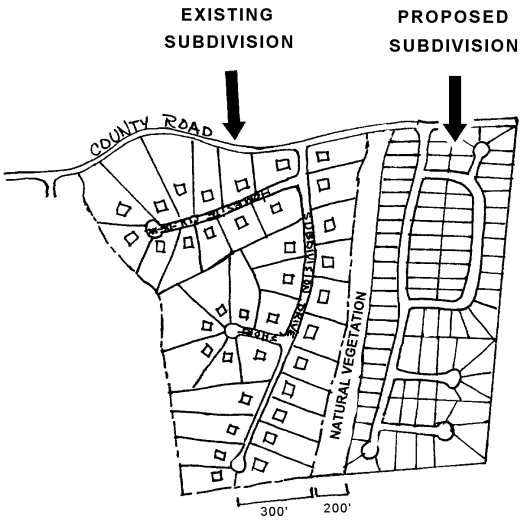

Source: Washoe County Department of Community Development.

(c) Multi-Family Residential to Single Family Residential. To provide adequate transition between multi-family and single-family residential parcels, the development code standards of the closest cooperative planning agency (City of Reno or City of Sparks) shall apply in those respective jurisdictions as those development code standards existed on October 17, 2002, except where a common code applies to all cooperative planning areas in accordance with standards provided for in the settlement agreement and in Exhibit 3, Initial Criteria for Areas within Extended SOIs of the Regional Plan Settlement Agreement Case No. CV02-03469.

(d) Single Family Residential and Multi-Family Residential to Non-Residential. To provide adequate transition between non-residential parcels and multi-family residential parcels, and between non-residential parcels and single family residential parcels, the development code standards of the closest cooperative planning agency (City of Reno or City of Sparks) shall apply in those respective jurisdictions as those development code standards existed on October 17, 2002, except where a common code applies to all cooperative planning areas in accordance with Exhibit 3, Initial Criteria for Areas within Extended SOIs of the Regional Plan Settlement Agreement Case No. CV02-03469.

(e) Non-Residential to Non-Residential. To provide adequate transition between varying uses on parcels designated non-residential, the side and rear setbacks shall be as required by the Washoe County Development Code on October 17, 2002, except where a common code applies to all cooperative planning areas in accordance with Exhibit 3, Initial Criteria for Areas within Extended SOIs of the Regional Plan Settlement Agreement Case No. CV02-03469.

[Added by Ord. 1191, provisions eff. 3/21/03.]

Section 110.434.30 Ridgelines.

(a) For visually important ridgeline (VIR) areas, the development standards of the applicable VIR area will apply, as developed in accordance with Article 822, Section 110.822.25(j).

(b) Where at buildout there will be a row of structures along a ridgeline, the setbacks must be staggered with a variation of at least twenty (20) feet in an irregular pattern to avoid creating a visual "wall." Uniformity in structures arrayed along ridgelines is to be discouraged and variation is to be encouraged.

(c) All other ridgeline design and development standards shall apply for Sparks, Reno and Washoe County as they were respectively in effect on October 17, 2002, except where a common code applies to all cooperative planning areas in accordance with Exhibit 3, Initial Criteria for Areas within Extended SOIs of the Regional Plan Settlement Agreement Case No. CV02-03469.

[Added by Ord. 1191, provisions eff. 3/21/03.]

Section 110.434.35 Earthquake Fault Areas. Development in earthquake fault areas is to be discouraged. No habitable structure, or a structure whose integrity is critical to maintaining the public health and safety, shall be located on a fault that has been active during the Holocene Epoch of geologic time or as determined by a site specific geotechnical study.

[Added by Ord. 1191, provisions eff. 3/21/03.]

[Section 110.434.30 entitled "Grading" added by Ord. 1191, provisions eff. 3/21/03 and repealed by Ord. 1236, provisions eff. 5/21/04.]

Attachment 1

MULTI-FAMILY RESIDENTIAL TO SINGLE FAMILY RESIDENTIAL ADJACENCY STANDARDS

	COUNTY	RENO	SPARKS
STRUCTURE HEIGHT	10du/ac = 40 ft. 21du/ac = 70 ft. 42du/ac = 70 ft. 110.406.05.1	14du/ac = 35 ft 21du/ac = 45 ft 30 du/ac = 45 ft. 18.06.503 Table 2	Duplex = 30 ft. 20du/ac = 30 ft. 29du/ac = 35 ft. 20.76.030, 20.74 and 20.76
SETBACKS	F/ S/ R 10du/ac = 15/5/10 21du/ac = 15/5/20 42du/ac = 20/5/20 110.406.05.1 None None	15ft/30 if street 10 ft. side 20 rear 18.06.503 table two 10 foot side & rear setback then add 1:1 height/setback ratio over 15' Building height for 2 acre site or less and 1:3 height/setback ratio over 15 feet for over 2 acres 18.06.506D	1ft height/ setback ratio 20.76.030, 20.74 and 20.76
LANDSCAPING	20% of site 1 tree/per 50 ft. frontage Living ground cover = 50% in 1 year Trees = mix conifers ½ 7 ft. & ½ 5 ft. tall Deciduous 50% 2" 50% 1" Preservation of Significant Trees Entire abutting setback area 110.412	20% of site 1 tree/per 300 sq.ft. of landscaping Living ground cover = 75% in 3 years Tree = mix 60% large = 10' 60% 2 ½ caliper Existing Tree Preservation Entire abutting setback landscaped 18.06.700	20% 1 tree/per 300 sq.ft. of landscaping 80% max turf Tree mix Conifer = 6 ft. Deciduous = 2" See Design Standards Guidelines 3-.9
SCREENING	6-7 ft. fence Trash Enclosure screened	6 ft solid 5 feet of landscaping adjacent 1 tree/30 ft. Same	Over 6 units SUP, address screening in review 15' periphery landscaping 4 trees, 24 shrubs per 100 lineal feet Same See Design Standards Guidelines 5-8
SIGNAGE	Not addressed	No signage in rear adjacent to single family	Not addressed
DESIGN STANDARDS	None None	Building Façade fenestration Vertical to horizontal articulation	Horizontal/vertical articulation over 50' Roof variation Over 6 Units requires Special Use Permit, see Design Standards 5-4

Attachment 2

NON-RESIDENTIAL TO SINGLE FAMILY RESIDENTIAL ADJACENCY STANDARDS

	COUNTY	RENO	SPARKS
STRUCTURE HEIGHT	NC/O = 60 ft. GC = 80 ft. TC = 45 ft. I = 65 ft. 110.406.05.1	OP & NC = 35 ft. GC = 65 ft. HC 65 ft. I = 55 ft. max. 18.06.503 Table 2	OP & NC = 30 ft. C1 = 30 ft. C2 = 60' TC = No Max I = 55 ft. max. 20.80.030
SETBACKS	F/ S/ R NC/O = 15/15/20 GC = 10/10/10 I = 15/10/15 110.406.05.1 None None	Adjoining Single Family Setback and add: 1:1 height/setback ratio over 15' Building height for 2 acre site or less add 1:3 height/ setback ratio over 15 feet for over 2 acres 18.06.506D	1:1 ratio of height/setback 20.83, .85 and .86
LANDSCAPING	20% of site for commercial, 10% industrial 1 tree/per 50 ft. frontage Living ground cover = 50% in 1 year Trees = mix conifers ½ 7 ft. & ½ 5 ft. tall Deciduous 50% 2" 50% 1" Preservation of Significant Trees	20% of site for OC/GO, NC, 15% for GC and I front yard with add on 18.06.702.1 1 tree/per 300 sq.ft. of landscaping Living ground cover = 75% in 3 years Tree = mix 60% large = 10' 60% 2 ½ caliper Existing Tree Preservation Entire abutting setback landscaped 18.06.700	25% of site for PO, 20% for C1, 15% for C2, 10% for TC 4 trees per 100 lineal feet Minimum 30' on center near residential Minimum planter 10' wide, 1 tree/5 shrubs ea. 25' Tree mix 50% = 6' 50% = 8 ft See Design Standards Guidelines 3.9 Perimeter Landscaping to residential
SCREENING	6-7 ft. fence Trash Enclosure screened	6 ft solid 5 feet of landscaping adjacent 1 tree/30 ft. Same	Solid and architecturally compatible, chain link with slats not allowed Same, metal doors Design Guidelines 3.9 Perimeter landscaping/screening to residential
SIGNAGE	Per sign ordinance	No signage in rear adjacent to single family	Per sign ordinance

Attachment 2 (continued)

NON-RESIDENTIAL TO SINGLE FAMILY RESIDENTIAL ADJACENCY STANDARDS

	COUNTY	RENO	SPARKS
DESIGN STANDARDS	None None None	Building Façade fenestration Vertical to horizontal articulation Consistent architecture on all sides of structure	Land Use buffering to residential, segregate to maintain livable residential environment No direct line of sight window orientation Design Guidelines 3-2 through 3-4
LOCATION	Per zoning	Per zoning	Noise, traffic or odor generating activities cannot be near residential uses

Article 436
STREET DESIGN STANDARDS

Sections:

110.436.00	**Purpose**
110.436.05	**Applicability**
110.436.10	**Relation to Other Standards**
110.436.15	**Authorization of Alternative Standards**
110.436.20	**General Requirements**
110.436.25	**Street Sections**
110.436.30	**Grades**
110.436.35	**Street Intersections**
110.436.40	**Street Crowns**
110.436.45	**Street Curves**
110.436.50	**Curbs and Gutters**
110.436.55	**Arterial Median Openings**
110.436.60	**Paving**
110.436.65	**Temporary Patches**
110.436.70	**Retaining Walls**
110.436.75	**Street Signs**
110.436.80	**Hazard Locations**
110.436.85	**Bus Turnouts**
110.436.90	**Dead-End Streets**
110.436.95	**Emergency Access Roads**
110.436.100	**Improved Maintenance Access**
110.436.105	**Private Access**
110.436.110	**Private Streets**
110.436.115	**Driveways**
110.436.120	**Cul-de-sacs and Knuckles**
110.436.125	**Partial Width Streets**
110.436.130	**Street Extensions**
110.436.135	**Pedestrian and Bicycle Ways**
110.436.140	**Street Improvement Plans: General Requirements**
110.436.145	**Street Improvement Plans: Contents**
110.436.150	**Street Improvement Plans: Plan and Profile Sheets**

Section 110.436.00 Purpose. The purpose of this article, Article 436, Street Design Standards, is to provide safe, properly designed, attractive streets that minimize environmental disturbance, including impacts on water quality, and minimize maintenance costs for the street system within Washoe County.

[Added by Ord. 908, provisions eff. 10/15/94.]

Section 110.436.05 Applicability. The provisions of this article shall apply to public and private street improvements for projects including, but not limited to, the following:

(a) Projects that will be subject to this article are:

(1) Public Works projects;

(2) Subdivisions; and

(3) Subdivisions utilizing a Grading Permit.

(b) Projects that may be subject to this article are:

(1) Projects requiring a site plan review;

(2) Projects requiring a special use permit;

(3) Projects utilizing a development agreement; and

(4) Parcel maps.

[Added by Ord. 908, provisions eff. 10/15/94.]

Section 110.436.10 Relation to Other Standards. The requirements set forth in this article make reference to and are to be used in conjunction with the following standards and guidelines:

(a) The *Standard Specifications for Public Works Construction* and the *Standard Details for Public Works Construction*, latest editions;

(b) The Washoe County Regional Transportation Commission (RTC) *Planning for Transit: A Guide for Community and Site Planning*;

(c) The Institute of Traffic Engineers (ITE) guidelines;

(d) The American Association of State Highway and Transportation Officials (AASHTO) guidelines;

(e) The *Manual of Uniform Traffic Control Devices* (MUTCD); and

(f) The Americans with Disabilities Act (ADA) standards.

[Added by Ord. 908, provisions eff. 10/15/94. Amended by Ord. 1064, provisions eff. 5/28/99.]

Section 110.436.15 Authorization of Alternative Standards. The following situations may result in the use of alternative standards:

(a) In instances where unique topographical or other physical constraints suggest the use of streets and associated systems that are not provided for in this article, the County Engineer may authorize alternative standards, provided that the alternative standards are equivalent standards in accordance with accepted engineering practices, the *Standard Specifications for Public Works Construction*, and the *Standard Details for Public Works Construction.*

(b) In instances where the street or road is on or eligible for inclusion on the Regional Road Impact Fee (RRIF) Network, these standards do not apply. Prior to commencing planning or design of RRIF Network facilities, a developer shall contact the County Engineer who will convene a meeting with the developer and the Regional Transportation Commission staff to establish appropriate design standards and provide guidance on a RRIF credit agreement application.

[Added by Ord. 908, provisions eff. 10/15/94. Amended by Ord. 1064, provisions eff. 5/28/99.]

Section 110.436.20 General Requirements. Street design requirements set forth in this section shall apply to all development subject to this article.

(a) Level of Service. Streets shall be designed to meet a Level of Service (LOS) standard C, or as otherwise provided for by Regional Transportation Commission policy.

(b) Street Improvements. All public and private streets within a development shall be improved to conform to the standards as set forth in this article.

(c) Ingress and Egress. Unless otherwise approved by the County Engineer, at least two (2) means of ingress and egress built to County standards shall be provided to serve a subdivision development. Of the two (2) means, one (1) may be constructed to emergency access standards provided in Section 110.436.95, Emergency Access Roads.

(d) Right-of-Way and Easement Acquisition. All necessary right-of-way or easement acquisition outside the boundaries of a proposed development, including any agreements pertaining to access, drainage, ownership and maintenance, shall be completed prior to the final map approval unless otherwise approved by the County Engineer.

(e) Streets Adjacent to Property Boundaries. The location of streets adjacent to property boundaries shall comply with the following provisions:

(1) Unless otherwise approved by the County Engineer, a street shown by an adopted street pattern or indicated on the Streets and Highways System Plan map that lies along a boundary of a development is to be dedicated and constructed at full width and to County standards; and

(2) A proposed street, or streets or access adjacent to or necessary to serve a proposed development, which are not within the boundaries of the development, shall be improved full width with the development in accordance with County standards as required by the County Engineer.

(f) Additional Right-of-Way. To facilitate turning movements near intersections, additional right-of-way shall be provided to the satisfaction of the County Engineer.

(g) Partial Width Streets. Where permitted, partial width streets shall comply with the provisions set forth in Section 110.436.125, Partial Width Streets.

(h) Street Extensions. Street extensions shall comply with the general provisions of this section and the provisions of Section 110.436.130, Street Extensions.

(i) Asphalt Pavement Structural Section. Asphalt pavement structural sections shall be designed in accordance with AASHTO, Asphalt Institute or other industry standard design methods as may be approved by the County Engineer.

(1) Such design sections shall be prepared by a Nevada Registered Civil Engineer and submitted with street improvement plans; and

(2) Boring logs shall be shown on street improvement plans.

(j) Traffic Studies. All traffic studies and reports shall be prepared in accordance with current ITE and AASHTO guidelines. Said studies and reports shall be prepared and stamped by a Nevada Registered Civil Engineer experienced in traffic engineering.

(k) Utilities. All new utilities shall be placed underground consistent with the street specifications provided in this article.

(l) Construction Traffic. Prior to final map approval, a proposed construction traffic haul route plan shall be submitted to the County Engineer for review and approval. Construction traffic includes all vehicles weighing in excess of 8,000 pounds unladen weight that are used to construct both off-site and on-site improvements.

(1) Existing residential streets that will be used as construction haul routes shall be evaluated by a geotechnical study to determine the existing pavement structural section and its load supporting capability; and

(2) If the pavement section is inadequate to support the proposed construction loadings but would be adequate in the absence of this construction traffic, the roadway shall be rehabilitated to support the anticipated additional loadings or reconstructed after construction use as needed to restore the existing design life, as approved by the County Engineer.

(m) Occupancy Permits. A Permit of Occupancy shall be obtained from the Nevada Department of Transportation (NDOT) for access to, from or under roads and highways maintained by the NDOT. Applicant shall submit approved Permits of Occupancy to the County Engineer.

(n) Signs. Signs and permanent markings shall be in accordance with the requirements of Section 110.436.75, Street Signs.

[Added by Ord. 908, provisions eff. 10/15/94. Amended by Ord. 1064, provisions eff. 5/28/99.]

Section 110.436.25 Street Sections. All roadways dedicated and improved in Washoe County shall be constructed in accordance with the street sections for urban, suburban and rural areas illustrated in Tables 110.436.25.1 to 110.436.25.4. These standards are to be used in conjunction with the Land Use and Transportation Element of the Master Plan and the standards set forth in this article.

(a) Exception. Any roadway that will be in the Regional Roadway Impact Fee Network must be designed in accordance with Regional Transportation Commission standards and conditions as directed under Section 110.436.15(b).

(b) Variance from Street Sections. The Planning Commission or hearing examiner may consider variations to the Street Section requirements under the provisions of Article 804, Variances, if appropriate considerations warrant different cross-section improvements.

Table 110.436.25.1

ROADWAY SECTIONS - A
GENERAL APPLICATIONS: ARTERIAL HIGHWAYS

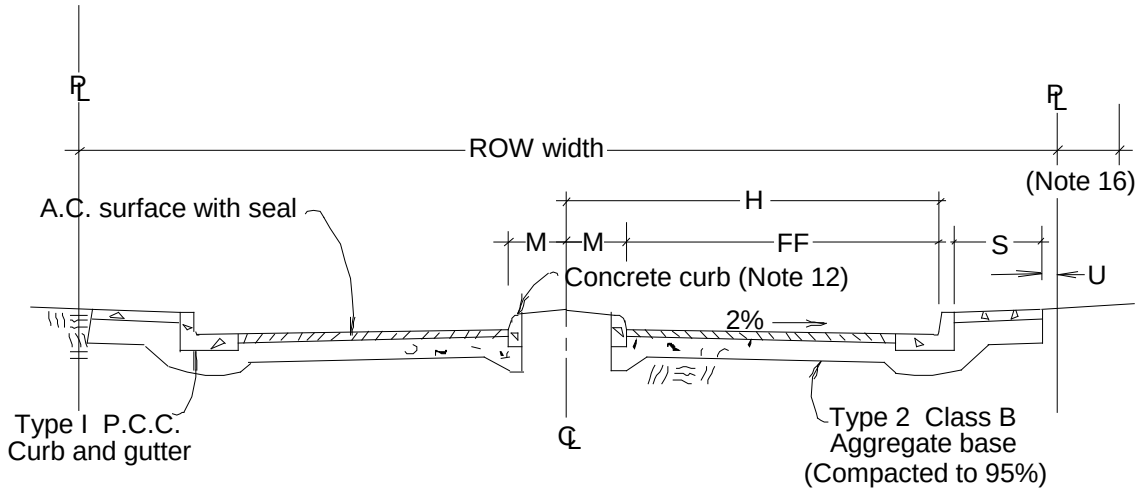

ROW	H	FF	M	S	U	ADT Maximum per 2 Travel Lanes	Remarks
100	44	36	8	5	0.5	12,100	Major Arterial
80	35	29.5		4	0.5	10,800	Minor Arterial

Notes:

1. All widths are in feet.
2. FF, H and M are measured to the front face of the curb. ROW is right-of-way; ADT is average daily traffic.
3. ADT represents the design volume for a two (2) lane facility.
4. Bicycle lanes shall be provided in accordance with the Bicycle and Pedestrian Element of the Regional Transportation Plan and to the satisfaction of the County Engineer.
5. On street parking not allowed on arterials.
6. Structural sections shall be designed by a registered engineer for a twenty (20) year life based on subgrade characteristics, as determined by a geotechnical investigation and anticipated traffic volume. Refer to Section 110.436.60(d) for minimum pavement section thickness.
7. All curb and gutter is monolithic concrete and L shaped per standard detail.
8. All sidewalk is concrete. Sidewalk shall be placed along both sides for arterials.
9. All A.C. surfaces shall be sealed in accordance with Washoe County standards.
10. Design of improvements to be done in accordance with Article 420, Storm Drainage Standards, and Article 436, Street Design Standards, of the *Washoe County Development Code*.
11. All construction is to be done to current Washoe County standards and specifications.
12. Median is concrete curb or other median construction approved by the County Engineer.
13. Residential driveway access not allowed.
14. Slope easements may be required in certain terrain to accommodate roadway section.
15. Typical stripping is for twelve (12) foot lanes.
16. A seven and one-half (7.5) foot public utility, traffic control signage and plowed snow easement on both sides of the ROW is required per standard detail.

Source: Washoe County Department of Public Works.

Table 110.436.25.2

ROADWAY SECTIONS - B
GENERAL APPLICATIONS: STREETS SERVING LOT SIZES LESS THAN 0.5 ACRES

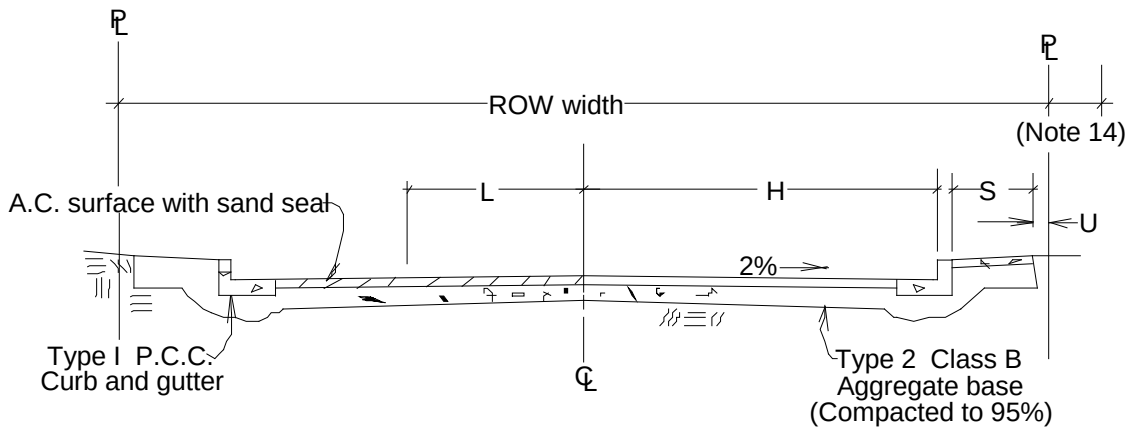

ROW	H	S	U	L	B	PL	ADT Maximum per 2 Travel Lanes	Remarks
52	20	5	0.5	12	4	0	9,600	Collector
42	16	4	0.5	11	0	2	1,000	Local

Notes:

1. All widths are in feet.
2. H is measured to the front face of the curb.
3. L is travel lane; S is sidewalk; B is bicycle lane; PL is maximum number of parking lanes allowed; ROW is right-of-way, ADT is average daily traffic.
4. ADT represents the design volume for a two (2) lane facility.
5. Bicycle lanes shall be provided in accordance with the Bicycle and Pedestrian Element of the Regional Transportation Plan and to the satisfaction of the County Engineer.
6. Structural sections shall be designed by a registered engineer for a twenty (20) year life based on subgrade characteristics, as determined by a geotechnical investigation and anticipated traffic volume. Refer to Section 110.436.60(d) for minimum pavement section thickness.
7. All curb and gutter is monolithic concrete and L shaped per standard detail.
8. Sidewalks are to be provided in accordance with Table 110.436.25.5.
9. All A.C. surfaces shall be sealed in accordance with Washoe County standards.
10. Residential driveway access not allowed to streets on which ten (10) year ADT design exceeds two thousand (2,000).
11. Design of improvements to be done in accordance with Article 420, Storm Drainage Standards, and Article 436, Street Design Standards, of the *Washoe County Development Code*.
12. All construction is to be done to current Washoe County standards and specifications.
13. Slope easements may be required in certain terrain to accommodate roadway section.
14. A seven and one-half (7.5) foot wide public utility, traffic control signage and plowed snow easement on both sides of the ROW is required per standard detail.

Source: Washoe County Department of Public Works.

Table 110.436.25.3

ROADWAY SECTIONS - C
GENERAL APPLICATIONS: STREETS SERVING LOT SIZES 0.5 - 1.5 ACRES

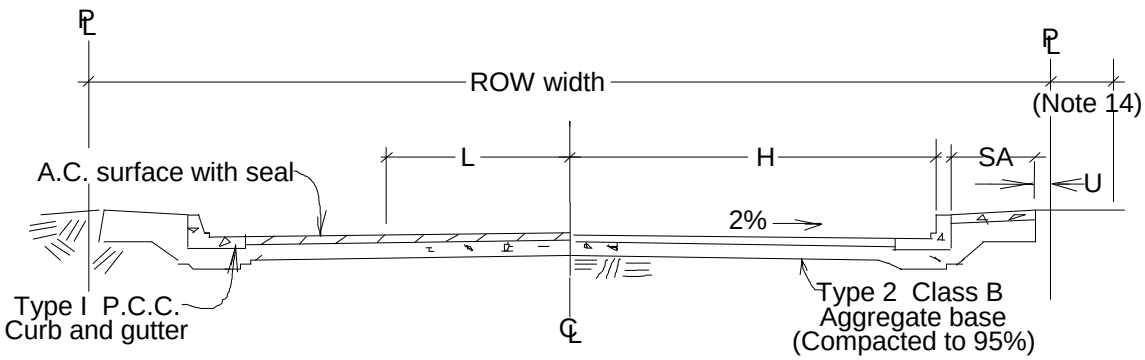

ROW	H	SA	U	L	B	PL	ADT Maximum per 2 Travel Lanes	Remarks
52	20	5	0.5	12	4	0	9,600	Collector
42	16	4	0.5	11	0	2	1,000	Local

Notes:

1. All widths are in feet.
2. H is measured to the front face of the curb.
3. L is travel lane; SA is sidewalk area; B is bicycle lane; ROW is right-of-way; PL is maximum number of parking lanes; ADT is average daily traffic.
4. ADT represents the design volume for a two (2) lane facility.
5. Bicycle lanes shall be provided in accordance with the Bicycle and Pedestrian Element of the Regional Transportation Plan and to the satisfaction of the County Engineer.
6. Structural sections shall be designed by a registered engineer for a twenty (20) year life based on subgrade characteristics, as determined by a geotechnical investigation and anticipated traffic volume. Refer to Section 110.436.60(d) for minimum pavement section thickness.
7. All curb and gutter is monolithic concrete and L shaped per standard detail.
8. Sidewalks in residential areas are to be provided in accordance with Table 110.436.25.5.
9. All A.C. surfaces shall be sealed in accordance with Washoe County standards.
10. Residential access is not allowed to streets on which ten (10) year design ADT exceeds two thousand (2,000).
11. Design of improvements to be done in accordance with Article 420, Storm Drainage Standards, and Article 436, Street Design Standards, of the *Washoe County Development Code*.
12. All construction is to be done to current Washoe County standards and specifications.
13. Slope easements may be required in certain terrain to accommodate roadway section.
14. A seven and one-half (7.5) foot wide public utility, traffic control signage and plowed snow easement on both sides of the ROW is required per standard detail.

Source: Washoe County Department of Public Works

Table 110.436.25.4

ROADWAY SECTIONS - D
GENERAL APPLICATIONS: STREETS SERVING LOT SIZES GREATER THAN 1.5 ACRES

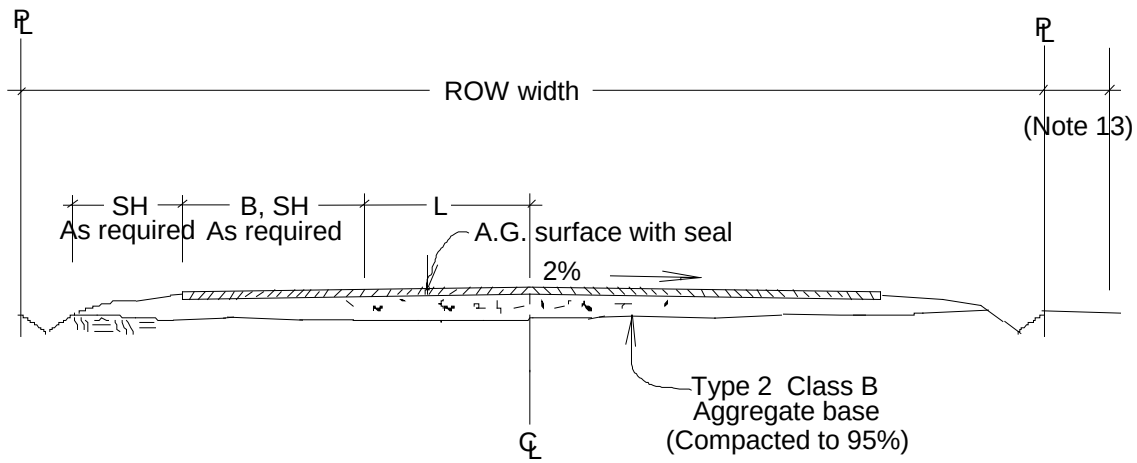

ROW	L	B	SH	ADT Maximum per 2 Travel Lanes	Remarks
60	12	0	0	9,600	Collector
50	11	0	0	1,000	Local

Notes:

1. All widths are in feet.
2. L is travel lane; B is bicycle lane; SH is shoulder; ROW is right-of-way; ADT is average daily traffic.
3. ADT represents the design volume for a two (2) lane facility.
4. Bicycle lanes shall be provided in accordance with the Bicycle and Pedestrian Element of the Regional Transportation Plan and to the satisfaction of the County Engineer.
5. Structural sections shall be designed by a registered engineer for a twenty (20) year life based on subgrade characteristics, as determined by a geotechnical investigation and anticipated traffic volume. Refer to Section 110.436.60(d) for minimum pavement section thickness.
6. All A.C. surfaces shall be sealed in accordance with Washoe County standards.
7. Residential access not allowed to streets on which ten (10) year design ADT exceeds two thousand (2,000).
8. The minimum paved shoulder width shall be two (2) feet, otherwise, the shoulder shall be engineered, Type 2 Class B aggregate base course or A.C. structural section as above, as required by the County Engineer.
9. Erosion protection required for drainage ditches.
10. Design of improvements to be done in accordance with Article 420, Storm Drainage Standards, and Article 436, Street Design Standards, of the *Washoe County Development Code*.
11. All construction to be done to current Washoe County standards and specifications.
12. Slope easements may be required in certain terrain to accommodate roadway section.
13. A seven and one-half (7.5) foot public utility, traffic control signage and plowed snow easement on both sides of the ROW is required per standard detail.

Source: Washoe County Department of Public Works

Table 110.436.25.5

SIDEWALK REQUIREMENTS

Factor	Sidewalk Both Sides	Sidewalk One Side	No Sidewalk
Street function	Collector (1)	Collector	Local/access/ cul-de-sac (3)
Traffic volume (ADT)	1,000+	251 to 1,000	250 or less
Comprehensive pedestrian plan (2)	Per plan	Per plan	Per plan

Notes:
1. May be limited to one side if separated from roadway improvements.
2. Any sidewalk/pedestrianway requirements may be supplemented with a pedestrian circulation plan at the request of the County Engineer.
3. Proximity of known or anticipated schools, shopping centers, etc., will be anticipated.

Source: Washoe County Department of Public Works

[Added by Ord. 908, provisions eff. 10/15/94. Amended by Ord. 1064, provisions eff. 5/28/99, Ord. 1378, provisions eff. 8/1/08; Ord. 1447, provisions eff. 9/9/10.]

Section 110.436.30 Grades. Street design shall comply with the following standards for minimum and maximum grades.

(a) Minimum Grades. All streets shall have a minimum grade of five-tenths (0.5) of one (1) percent.

(b) Maximum Grades:

(1) Arterials. Arterials shall have a maximum allowable grade of six (6) percent.

(2) Residential and Collector Streets. Residential collector and local streets shall have a maximum allowable grade of six (6) percent except as otherwise approved by the County Engineer, because of topographical constraints.

(3) Residential Driveways. The maximum grade for a driveway shall be fourteen (14) percent.

(4) Street Grade Exceptions. If approved by the County Engineer, the maximum grade for residential and collector streets may be increased as follows:

(i) Streets with a northern exposure may be allowed a maximum grade of nine (9) percent.

(ii) Streets with a southern exposure may be allowed a maximum grade of ten (10) percent.

(iii) All streets with grades greater than eight (8) percent shall be limited to a horizontal length of four hundred (400) feet, and shall

be provided with landings on both ends of the steeper section of the grade. The grade of the landings shall be six (6) percent or less and at least one hundred (100) feet in length.

(c) Long Grades. On long grades, the steeper grades shall be near the bottom of the ascent wherever possible, with shallower grades near the top of the ascent.

(d) Street Intersections. Street intersection grades shall conform to the provisions set forth in Section 110.436.35, Street Intersections, and in accordance with Washoe County *Standard Details for Public Works Construction* for grade changes at intersections.

(e) Horizontal Curvature. Horizontal curves shall be designed in accordance with Section 110.436.45, Street Curves.

(f) Undulating Streets. "Roller coaster" and "hidden dip" patterns are not allowed on through streets.

[Added by Ord. 908, provisions eff. 10/15/94.]

Section 110.436.35 Street Intersections. Street intersections shall be designed in accordance with the provisions of this section.

(a) Street Grades. Street grades at intersections shall be as follows:

(1) Intersections shall not be allowed when the grade on the primary street exceeds six (6) percent on streets with a northern exposure and eight (8) percent on streets with a southern exposure, unless otherwise approved by the County Engineer; and

(2) Street grades on the minor legs of intersections shall not exceed four (4) percent for a minimum distance of fifty (50) feet, measured from the extension of the face of the curb of the primary street through the intersection as improved to full County standards, unless otherwise approved by the County Engineer.

(b) Local Streets at Stop Condition. Street intersections of two (2) local streets in a stop condition shall not require a vertical curve at the intersection of the crown section with the street grade.

(c) No Stop Condition. No stop street intersections shall require a vertical curve transition at the intersection of the crown section with the street grade.

(d) Intersection Angles. Any street or highway intersecting any other street or highway shall intersect at an angle as near to a right angle as is practicable, but in no event shall it intersect at an angle of less than sixty (60) degrees, unless approved by the County Engineer.

(e) Offset Intersections. An offset distance of two hundred (200) feet or less separating two (2) local streets shall not be permitted.

(f) Intersection Grade Change. Grade changes at intersections shall be in accordance with Washoe County *Standard Details for Public Works Construction*.

[Added by Ord. 908, provisions eff. 10/15/94.]

Section 110.436.40 Street Crowns. Street crowns shall be designed in accordance with the provisions of this section.

(a) Definition. Unless otherwise approved by the County Engineer, the street crown shall be at the centerline of the traveled way.

(b) Grade Specifications. The normal street crown grades shall be two (2) percent from the centerline to the lip of the gutter. When approved by the County Engineer, street crown grades may be a minimum of one (1) percent to a maximum of four (4) percent.

[Added by Ord. 908, provisions eff. 10/15/94.]

Section 110.436.45 Street Curves. Street curves shall be designed in accordance with the provisions of this section. Consideration for adjusting the minimum design speeds may be given if warranted by topographic constraints.

(a) Vertical Curves. Vertical curves shall be provided wherever the algebraic difference between two (2) intersecting grades is two (2) percent or more, excluding intersections, unless otherwise approved by the County Engineer. Such vertical curves shall be of sufficient length to provide the following:

(1) Minimum sight and stopping distances as established by AASHTO; and

(2) Minimum Design Speeds as follows:

(i) Twenty-five (25) mph (miles per hour) for local and collector streets;

(ii) Forty (40) mph for minor arterial streets; and

(iii) Fifty (50) mph for major arterials.

(b) Horizontal Curves. Street design shall be consistent with the horizontal curve provisions set forth in this subsection.

(1) Horizontal curve radii shall be determined using the following design speeds:

(i) Fifteen (15) mph (miles per hour) for local streets of two hundred fifty (250) average daily trips (ADT) or less;

(ii) Twenty-five (25) mph for local and collector streets;

(iii) Forty (40) mph for minor arterials; and

(iv) Fifty (50) mph for major arterial and expressway streets.

(2) Horizontal curvatures shall not be introduced at or near the top of a pronounced crest vertical curve or near the bottom of a pronounced sag vertical curve.

(3) The minimum design radius shall be determined using the following formula:

$$R_{min} = \frac{V^2}{15(e+f)}$$

R = Centerline radius of roadway.
e = Super elevation rate, decimal (for a normal crown section, e is assumed negative for adverse side). Super elevation may be required by the County Engineer on higher speed streets. Maximum allowable super elevation shall be four (4) percent.
f = Friction factor from Table 110.436.45.1.
V = Design speed (mph)

(4) The friction factor (f) used in Subsection (b) (3) of this section shall be determined as follows:

(i) All collector and arterial streets shall be designed using the friction factor from the "High Speed Urban Streets" as set forth in Table 110.436.45.1; and

(ii) Local streets shall be designed using the friction factor from the "Low Speed Urban Streets" as set forth in Table 110.436.45.1.

(5) Stopping sight distances shall be in accordance with AASHTO recommended guidelines.

(c) Curve Separations. Curves on any street, except local streets, shall be separated by a tangent of not less than one hundred (100) feet.

(d) Right Angle Intersections. At each right angle street intersection, the property line at each block corner shall be rounded with a curve that conforms to the curb return radii set forth in Subsection (f) of this section.

(e) Less Than Right Angle Intersections. Where streets intersect at angles of less than right angles or where peculiar conditions of intersection occur, the County Engineer may require a different radius.

(f) Curb Returns. Curb returns shall have minimum face of curb radii as follows:

(1) Twenty (20) feet on local streets;

(2) Twenty-five (25) feet on collector streets;

(3) Thirty (30) feet on minor arterial streets; and

(4) Forty (40) feet on major arterial and expressway streets.

Table 110.436.45.1

AASHTO MINIMUM DESIGN RADIUS CRITERIA

Design Speed V (mph)	f (Friction Factor)	
	Low Speed Urban Streets	High Speed Urban Streets
20	0.30	
25	0.25	
30	0.22	0.16
40		0.15
50		0.14

Source: American Association of State Highways and Transportation Official Publication, *A Policy on Geometric Design of Highways and Streets*, 1984.

[Added by Ord. 908, provisions eff. 10/15/94.]

Section 110.436.50 Curbs and Gutters. Curbs and gutters shall be provided in accordance with the requirements of this section.

(a) Installation and Maintenance. When existing improvements are deteriorated or displaced, new curb and gutter shall be installed, including paving between street cut and gutter line on all streets.

(b) Pedestrian Ramps. Curb returns shall be provided with pedestrian ramps for the handicapped in accordance with County and ADA standards.

(c) Construction Materials. Curbs and gutters shall be constructed in accordance with the *Standard Specifications for Public Works Construction* and *Standard Details for Public Works Construction*, latest editions, unless otherwise approved by the County Engineer.

[Added by Ord. 908, provisions eff. 10/15/94.]

Section 110.436.55 Arterial Median Openings. Median openings on arterial streets that have continuous raised center medians shall not be permitted unless all of the provisions of this section are met.

(a) Major Traffic Generator. The property to be served is a major traffic generator and has a minimum continuous frontage of six hundred (600) feet along a major street, or access easements are recorded to allow use of the opening by a minimum of two (2) properties which combined generate sufficient traffic to warrant the opening.

(b) Proximity to Arterial Streets. The median opening is not less than seven hundred (700) feet from an intersection with an arterial.

(c) Proximity to Collector or Local Streets. The median opening is not less than four hundred (400) feet from an intersection with a collector or local street.

(d) Mid-block Median Openings. The median opening is not less than six hundred (600) feet from any other existing or planned mid-block median opening.

(e) Sight Distance. Sight distance is adequate for the design speed of the major street.

(f) Costs. All costs such as base material, pavements, safety lighting, traffic signals, reconstruction, or utility relocation required by a mid-block opening will be borne by the requesting party.

(g) Design. The design of median openings shall be subject to the requirements and approval of the County Engineer, including storage, lengths and tapers, and in accordance with the AASHTO and/or ITE requirements.

[Added by Ord. 908, provisions eff. 10/15/94.]

Section 110.436.60 Paving. Design of the structural section for asphalt concrete pavement for public and private streets shall be in accordance with the provisions of this section.

(a) Consistency. The design of the paving sections shall be in accordance with AASHTO, Asphalt Institute or other industry standard design methods as may be approved by the County Engineer.

(b) Approvals. All paving shall require the approval of the County Engineer and be confirmed as adequate by the applicable soils investigation.

(c) Design. The minimum design life of the structural section shall be twenty (20) years. A detailed geotechnical analysis and report shall be submitted to the County Engineer for review and approval. The resultant pavement section thickness shall be based on the geotechnical report and traffic analysis if the report indicates a structural section stronger than the minimum is required.

(d) Minimum Pavement Thickness. The criteria defining the minimum thickness of the structural sections for asphalt concrete pavement for streets are as follows unless other equivalent minimum structural sections are approved by the County Engineer based on a geotechnical report:

(1) Arterial Streets. Asphalt concrete structural sections for arterial streets shall be a minimum of five (5) inches of pavement over six (6) inches of Type 2 Class B aggregate gravel base;

(2) Collector Streets. Asphalt concrete structural sections for collector streets shall be a minimum of four (4) inches of pavement over six (6) inches of Type 2 Class B aggregate gravel base;

(3) Local Streets. Asphalt concrete structural sections for local streets shall be a minimum of three (3) inches of pavement over six (6) inches of Type 2 Class B aggregate gravel base;

(4) Bus Routes. Asphalt concrete structural sections for proposed bus routes shall be a minimum of five (5) inches of full width pavement over six (6) inches of Type 2 Class B aggregate gravel base; and

(e) Construction Haul Route. All on-site streets, both public and private, which are to be utilized by construction vehicles during development, shall be paved in accordance with the standards contained in Section 110.436.20, General Requirements.

(f) Seal. A seal for private and public streets shall be placed within twenty (20) days after the asphalt concrete pavement has been constructed unless the temperature is below fifty (50) degrees Fahrenheit or when weather conditions, in the opinion of the County Engineer, would prevent proper construction. The type of seal used shall be determined by the County Engineer.

[Added by Ord. 908, provisions eff. 10/15/94. Amended by Ord. 1064, provisions eff. 5/28/99.]

Section 110.436.65 Temporary Patches. Temporary patches shall be provided in accordance with the provisions of this section.

(a) Thickness. Temporary patches shall be a minimum of two (2) inches thick and compacted in accordance with procedures acceptable to the County Engineer.

(b) Elevation. Temporary patches shall not deviate more than three-fourths (3/4) inch above the existing pavement grade when measured from the bottom of a straight edge laid two (2) feet beyond the patch on both sides of the existing pavement. In no case shall the elevation of the patch be lower than the existing adjacent pavement elevation.

(c) Loose Material. All loose material shall be removed from the temporary patch site immediately after completion of the patch.

[Added by Ord. 908, provisions eff. 10/15/94.]

Section 110.436.70 Retaining Walls. All retaining walls shall be constructed in accordance with the provisions of this section.

(a) Design Calculations. Unless using standard County details, all retaining walls constructed within the public right-of-way and those which are to be maintained by the County shall have a complete set of design calculations submitted with the improvement plans for review. All calculations shall be signed and sealed by a Nevada Registered Civil Engineer.

(b) Private Retaining Walls. Any retaining walls associated with private streets and constructed on private property shall be reviewed by the Chief Building Inspector and shall be subject to the *Uniform Building Code* (UBC) design criteria and the provisions of this section.

(c) Anti-Graffiti Treatment. An anti-graffiti treatment shall be applied to all masonry or concrete retaining walls.

[Added by Ord. 908, provisions eff. 10/15/94.]

Section 110.436.75 Street Signs. Street signs shall conform to the provisions of this section.

(a) Conformance. Signs and pavement markings shall conform with the most recent edition of the *Manual on Uniform Traffic Control Devices* (MUTCD), published by the Federal Highway Administration.

(b) Intersections. Street signs designed to County standards shall be installed at all intersections.

(c) Public Streets and Bikeways. Signs and pavement markings shall be installed on all public streets and bikeways, as required by the County Engineer.

(d) Posted Speeds. Posted speeds on County streets shall be in accordance with the following subsections, unless designated otherwise by the County Engineer:

(1) Twenty-five (25) miles per hour (mph) on local and collector streets;

(2) Thirty-five (35) mph on minor arterial streets; and

(3) Forty-five (45) mph on major arterial streets.

(e) Sign Layout. Proposed sign layouts shall be submitted with plans showing other public improvements (e.g. street improvement plans).

(f) Private Streets. Street signs for private streets shall conform to the following requirements:

(1) Regulatory signs shall be installed at the juncture of all public streets with a private street, as approved by the County Engineer. Said sign shall state: "Private Street Not Maintained By County." All regulatory signs shall meet the *Manual on Uniform Traffic Control Devices* standards and be approved by the County Engineer.

(2) Private streets may be required by the County Engineer or Fire Marshal to be posted "No Parking" on one (1) or both sides, with the provision and maintenance of such signs being the responsibility of the homeowners or other association.

[Added by Ord. 908, provisions eff. 10/15/94.]

Section 110.436.80 Hazard Locations. High hazard locations along streets shall be mitigated by the use of protective devices approved by the County Engineer. Street right-of-way and width widening shall be provided where necessary for the installation of such protective devices.

[Added by Ord. 908, provisions eff. 10/15/94.]

Section 110.436.85 Bus Turnouts. Bus turnouts shall be provided when required by the County Engineer. The design of required bus turnouts shall be in accordance with Regional Transportation Commission (RTC) standards.

[Added by Ord. 908, provisions eff. 10/15/94.]

Section 110.436.90 Dead-End Streets. All dead-end streets shall be provided with a cul-de-sac in accordance with Section 110.436.120, Cul-de-sacs and Knuckles.

[Added by Ord. 908, provisions eff. 10/15/94.]

Section 110.436.95 Emergency Access Roads. Emergency access roads shall be designed in accordance with the provisions of this section.

(a) Placement and Structural Design. Unless otherwise approved by the Fire Marshal, emergency access roads shall comply with the following standards:

(1) Emergency access roads shall be placed within a minimum thirty (30) foot wide easement; and

(2) The roadways shall be a minimum width of twenty (20) feet and structurally designed to support a tandem axle loading of twenty-five (25) tons, with a minimum outside turning radius of forty (40) feet.

(b) Grades. Grades for emergency access roads shall not exceed the maximum for street grades, unless otherwise approved by the County Engineer.

(c) Access. Access to such roadways shall be controlled by an emergency access control gate, and shall be posted with a sign stating "For Emergency Vehicles Only." Alternatives may be approved by the County Engineer.

(d) Surfacing for Temporary Emergency Access Roads. Temporary emergency access roads shall be surfaced with a minimum of six (6) inches of Type 2 Class B aggregate base and sealed with a minimum of eight one-hundredths (0.08) gallon per square yard of asphalt or other alternative approved by the County Engineer, and shall be provided with adequate roadside drainage consistent with County standards, including Article 420, Storm Drainage Standards.

(e) Surfacing for Permanent Emergency Access Roads. Permanent emergency access roads shall be paved with a minimum of two and one-half (2.5) inches of asphalt concrete pavement on an engineered gravel base and shall be provided with adequate roadside drainage consistent with County standards, including Article 420, Storm Drainage Standards.

[Added by Ord. 908, provisions eff. 10/15/94.]

Section 110.436.100 Improved Maintenance Access. Vehicular access for maintenance of County-owned sanitary sewers and storm drainage facilities, and their related appurtenances, shall be designed in general accordance with the provisions of this section.

(a) Minimum Width. Access ways/roads shall be constructed to a minimum width of twelve (12) feet.

(b) Structural Design. Access ways shall be constructed to support a tandem axle loading of ten (10) tons.

(c) Roadside Drainage. Access ways shall be constructed to provide adequate roadside drainage consistent with County standards, including Article 420, Storm Drainage Standards.

(d) Grades. Improved maintenance access ways shall be constructed with grades not exceeding twelve (12) percent, unless approved by the County Engineer.

(e) Surfacing for Temporary Maintenance Access Roads. Temporary emergency access roads shall be surfaced with a minimum of four (4) inches of Type 2 Class B aggregate base or other equivalent as approved by the County Engineer.

(f) Surfacing for Permanent Maintenance Access Roads. Permanent maintenance access roads shall be a four (4) inch minimum thickness Type 2 Class B compacted gravel base on a compacted subgrade and shall be provided with

adequate roadside drainage consistent with County standards, including Article 420, Storm Drainage Standards.

(g) Snowplows. Snowplow maintenance turnarounds shall be located, and constructed to either permanent or temporary cul-de-sac standards, as determined by the County Engineer.

[Added by Ord. 908, provisions eff. 10/15/94.]

Section 110.436.105 Private Access. Private access roads serving not more than four (4) lots shall be designed in accordance with the following provisions:

(a) Minimum Easement Width. Private access easements serving not more than four (4) residential units shall be a minimum of twenty (20) feet in width.

(b) Improvement. Private access shall be improved to the satisfaction of the County Engineer.

(c) Drainage. The access roadway shall be provided with adequate roadway drainage consistent with County standards, including Article 420, Storm Drainage Standards.

[Added by Ord. 908, provisions eff. 10/15/94.]

Section 110.436.110 Private Streets. Private streets for newly created subdivisions shall be designed in accordance with the provisions set forth in this section.

(a) Street Section. The minimum pavement surface width for a private local street is twenty-two (22) feet and twenty-four (24) feet for a collector designated street. Concrete curb and gutter will be required for a lot size of less than 0.5 acres. The minimum required rights-of-way for these street sections shall be thirty-six (36) and thirty-eight (38) feet, respectively.

(b) Street Signs. Street signs for private streets shall conform to the provisions of Section 110.436.75, Street Signs.

(c) Traffic Carrying Capability. Lane widths of private streets shall be capable of safely carrying the projected traffic. This may need to be evidenced by a traffic report prepared by a Nevada Registered Civil Engineer, experienced in traffic engineering, to the satisfaction of the County Engineer.

(d) Design and Construction. All private streets shall be geometrically designed and constructed to the applicable ITE and AASHTO criteria (e.g. curve radii, maximum slopes, setbacks) to the satisfaction of the County Engineer.

(e) Right-of-Way. All street widths shall be sufficient to accommodate the projected traffic, attendant drainage, pedestrian demand, utilities, emergency vehicles, delivery and collection vehicles, and any bicycle lanes if planned by the developer, to the satisfaction of the County Engineer. The minimum right-of-way access widths shall be in accordance with Section 110.436.25, Street Sections, and this section.

(f) Pavement Structural Section. The minimum pavement structural section shall be as provided for in Section 110.436.60, Paving.

(g) CC&Rs. The conditions, covenants and restrictions (CC&Rs) shall prominently note to the satisfaction of the County Engineer that Washoe County will not assume responsibility for maintenance of the development's private street system or drainage system, or accept the streets for dedication to Washoe County unless the streets meet those Washoe County standards in effect at the time of offer for dedication.

(h) Security Gates. Private streets that are designed with security gates shall have adequate on-site stacking space. The specific type and size of the stacking areas must be approved by and constructed to the satisfaction of the County Engineer.

(i) Regulatory Signs. Signs must be posted in accordance with the provisions of Section 110.436.75, Street Signs.

(j) 100-Year Flood. Private streets that are designed to permit passage of a portion of the 100-year flood over the roadway will be allowed, to the satisfaction of the County Engineer, if the following conditions are met:

(1) An alternate roadway access which is not susceptible to overtopping by the 100-year flood exists and is available for use;

(2) The overtopped roadway is designed to not be washed out by the 100-year flood; and

(3) Public safety will not be compromised.

(k) Storm Drainage. Private streets for lot sizes of 0.5 acres or greater may be designed to use open drainage systems; all designs must be based on the requirements of Article 420, Storm Drainage Standards.

(l) Final Map Notes. The applicable notes on the final map shall be modified to reflect the granting of the request for private streets to the satisfaction of the County Engineer. The map shall prominently note the private streets and drainages.

(m) Turnarounds. Turnarounds shall be provided as needed.

[Added by Ord. 908, provisions eff. 10/15/94.]

Section 110.436.115 Driveways. Design and construction for driveways, approaches and curb cuts shall be in accordance with County standards and the provisions of this section.

(a) Provision of Driveways. Where car storage or access for motor vehicles is desired in business, commercial or industrial districts, provisions shall be made for a driveway.

(b) Commercial Driveways. Spacing from center to center shall be a minimum of two hundred thirty-five (235) feet on major arterials, one hundred fifty (150) feet on minor arterials, and fifty (50) feet on commercial collectors.

(c) Driveway Approaches. All driveway approaches shall enter properties via a standard curb cut.

(d) Unused Driveways. Unused driveways shall be replaced with new curb, gutter and sidewalks.

[Added by Ord. 908, provisions eff. 10/15/94.]

Section 110.436.120 Cul-de-sacs and Knuckles. Cul-de-sacs and knuckles shall be designed in accordance with the provisions of this section.

(a) Minimum Grades. Minimum grades around cul-de-sacs and knuckle-type intersections shall be one-half of one (0.5) percent.

(b) Street Crowns. The normal street crown may be increased to a maximum of four (4) percent from the centerline to the lip of the gutter.

(c) Knuckle Turnouts. Without prior approval by the County Engineer, knuckle turnouts shall not be allowed on through streets or local streets serving more than twenty (20) lots.

(d) Cul-de-sac Length. Cul-de-sacs shall not exceed fifteen hundred (1,500) feet in length as measured from the end of the cul-de-sac bulb to the intersecting street curb line. A maximum average daily traffic (ADT) of 300 is allowed.

(e) Cul-de-sac Bulb Radius. The minimum turnaround radius of the cul-de-sac bulb shall be forty-eight (48) feet measured from the radius point to the face of the curb.

(f) Cul-de-sac Bulb Right-of-Way. Minimum right-of-way for the cul-de-sac bulb shall be forty-eight (48) feet measured from the radius point to the right-of-way line.

(g) Temporary Cul-de-sacs. Temporary cul-de-sacs shall comply with the provisions of this subsection.

(1) When located within the development, temporary cul-de-sacs shall be constructed with the structural section used for the associated street, unless otherwise approved by the County Engineer. Asphalt curbing shall be used.

(2) Temporary cul-de-sacs shall be provided with adequate drainage consistent with County standards, including Article 420, Storm Drainage Standards.

(3) All temporary cul-de-sacs shall have a minimum radius of forty-eight (48) feet.

[Added by Ord. 908, provisions eff. 10/15/94.]

Section 110.436.125 Partial Width Streets. Partial width streets shall not be permitted whenever the street is used for access to a development. Where permitted, partial width streets shall comply with the provisions of this section.

(a) Property Boundaries. The location of partial width streets adjacent to property boundaries shall comply with Section 110.436.20, General Requirements.

(b) Street Improvement Plans. Partial width streets shall be clearly designated on street improvement plans as required by the provisions of Sections 110.436.140, Street Improvement Plans: General Requirements; 110.436.145, Street Improvement Plans: Contents; and 110.436.150, Street Improvement Plans: Plan and Profile Sheets, as being only a portion of a street and not a street of full width.

(c) Existing Partial Width Streets. Where a dedicated and recorded partial width street exists adjacent to proposed development, the other portion shall be dedicated with the proposed development to make the street complete.

(d) Minimum Improvements. Partial width streets which are permitted along the boundary of a development shall be improved at least to half width, but in no instance shall the paved travel way be less than twenty-four (24) feet in width (with no on-street parking). Curb, gutter and sidewalk adjacent to the development, and a minimum two (2) foot shoulder opposite the development, shall be provided. The final width of improvements shall be determined by the County Engineer.

(e) Grading and Drainage. Provisions for cut and/or fill slopes along the shoulder and any necessary sanitary sewer, storm drain or utility extensions shall be provided and constructed to County standards.

(f) Future Saw Cut. A two (2) inch by six (6) inch redwood header shall be placed along the open pavement edge, or a one (1) foot additional width shall be added to the pavement for a future saw cut.

[Added by Ord. 908, provisions eff. 10/15/94.]

Section 110.436.130 Street Extensions. Street extensions shall comply with the provisions of this section.

(a) Development Boundary. Streets constructed to full width improvements shall be extended to the development boundary for extension to future development, when required by the County Engineer.

(b) Temporary Cul-de-sac. Streets extending to the development boundary, which are proposed for future extension, shall be provided with temporary cul-de-sacs, when required by the County Engineer,

(c) Future Development. The future removal of temporary cul-de-sacs and their replacement to full width County standard street improvements shall be provided with the extension of the street by future development.

[Added by Ord. 908, provisions eff. 10/15/94.]

Section 110.436.135 Pedestrian and Bicycle Ways. Pedestrian and bicycle ways shall be designed in accordance with the provisions of this section.

(a) Sidewalk Widths. In no instance shall sidewalks be less than four (4) feet in width. In commercial areas, sidewalks shall not be less than five (5) feet in width.

(b) Bikeway Design. The design of bikeways shall conform to AASHTO *Guide for Development of New Bicycle Facilities*, latest edition, unless otherwise specified

by the County Code; *Standard Specifications for Public Works Construction*; *Standard Details for Public Works Construction*; Regional Transportation Commission guidelines; or this section.

(c) Structural Section. The structural section of public and private bicycle and pedestrian paths shall conform to the following provisions:

(1) The structural section shall be based on a soils report recommendation; and

(2) The minimum structural section shall be two and one-half (2.5) inches of Type 2 or Type 3 asphalt concrete pavement compacted to ninety-five (95) percent minimum density over an engineered subgrade. Drainage shall be consistent with County standards, including Article 420, Storm Drainage Standards. The pavement shall be sealed in accordance with Washoe County standards.

(d) Obstructions. No obstruction (i.e. power poles, street lights, signal poles and controls, water meter boxes, pull boxes, mail boxes, etc.) shall be located within sidewalk areas or pedestrian ways, except as allowed by the County Engineer. Any necessary additional right-of-way that may be required for locating such obstructions at the back of sidewalks shall be dedicated or easements provided for, if needed (e.g. for mailboxes).

(e) Cut and Fill Slopes. Cut and fill slopes shall be set back a minimum of one (1) foot from the back of the sidewalk. If no sidewalk exists, the setback shall be a minimum of five (5) feet from the back of the curb.

[Added by Ord. 908, provisions eff. 10/15/94.]

Section 110.436.140 Street Improvement Plans: General Requirements. All street improvement plans submitted to the County shall conform to the requirements of this section.

(a) Plan Size. Plans shall be on standard twenty-four (24) inch by thirty-six (36) inch sheets.

(b) Plan Information. Each sheet of the plans shall include the north arrow, scale and a title block including the following:

(1) The name of the project, owners and type of design shown on the plan;

(2) The name and seal of the Nevada Registered Professional Civil Engineer;

(3) The date, sheet number and total number of sheets; and

(4) Any information necessary to clarify the design.

(c) Existing Conditions and Improvements. The plans shall clearly indicate, in plan and profile, the distinction between existing conditions and proposed improvements, and shall designate identified improvements as public or private.

(d) Existing Paving. When showing existing pavement or concrete in relation to new work, suitable shading or delineation shall be made to highlight the proposed new work.

(e) Adjacent Property. The plans shall show adjacent property owners.

(f) Certification. All designs shall be certified by a Nevada Registered Professional Civil Engineer. Upon concurrence by the County with the plans, this engineer shall provide the County Engineer with reproducible sepia-mylar copies of the plans and at least one (1) set of prints of the plans, wet stamped and signed.

[Added by Ord. 908, provisions eff. 10/15/94.]

Section 110.436.145 Street Improvement Plans: Contents. The contents of the street improvement plan sheets shall include all items required by the County Engineer and the provisions of this section.

(a) Title Sheet. Improvement plans shall include a title sheet which shows the entire project or assessment district and includes, at a minimum, the following:

(1) Index;

(2) Legend;

(3) Vicinity map with any city limits shown thereon;

(4) Owner;

(5) Engineer; and

(6) All pertinent notes.

(b) Utility Index. Improvement plans shall include a utility index which consists of a single sheet of the subdivision or development showing the following:

(1) The general location of sanitary sewer and storm drain systems;

(2) All manholes and structures identified and numbered; and

(3) All improvements indicated as either public or private as appropriate, including all rear lot drainage ways and piping to off-site systems and drainage ways where required.

(c) Easements. The following right-of-way and easement lines shall be properly dimensioned and noted on the plans:

(1) Right-of-way lines on both sides of all streets;

(2) Boundaries of lots fronting on both sides of all streets;

(3) Drainage and utility easements;

(4) Section lines and corners;

(5) Land grant lines; and

(6) Temporary construction easements, both existing and proposed.

(d) Topography and Improvements. All pertinent topographic features and improvements shall be shown including:

(1) Street lines;

(2) Curbs, sidewalks and shoulders;

(3) Location and size of sanitary sewers, storm drains and drainage ditches;

(4) Location and sizes of utilities including water, gas, electrical, telephone lines, utility poles, and fire hydrants; and

(5) Structures, houses, trees and other flora, and all other features of the area which may affect the design.

(e) Proposed Improvements. Where proposed improvements meet existing infrastructure facilities, the plan shall show all of the following for a minimum distance of three hundred (300) feet from any boundary of the development:

(1) Pertinent existing elevations;

(2) Gutter grades;

(3) Centerline of pavement;

(4) Sewer and storm drain inverts;

(5) Driveway locations; and

(6) Traffic signal equipment, detection loops, etc.

(f) Stationing and Orientation. The stationing on plan and profile shall be from south to north and west to east insofar as practical and shall include:

(1) All street centerlines;

(2) Beginning of curves;

(3) Points of compound curves;

(4) End of curves; and

(5) Limits of work.

(g) Curve Data. Curve data shall include:

(1) Centerline radius;

(2) Length of curve; and

(3) Delta or central angle and tangent distances.

(h) Vertical Curves. Vertical curves shall include:

(1) The length of the curve;

(2) BVC (Beginning of Vertical Curve) and EVC (End of Vertical Curve) station and elevation; and

(3) K-value used (rate of vertical curvature).

(i) Benchmarks. Benchmarks shall be clearly indicated on the plans as to location, description, elevation and datum.

(j) Typical Section. A typical section(s) for each type of street within the area to be improved shall be a part of the plans and shall include the following:

(1) Structural features (delineated);

(2) Width of right-of-way;

(3) Improvement dimensions and details on both sides of all streets; and

(4) Boring logs from the soils report are to be included in the construction plans.

(k) Cross Sections. Cross sections shall be included in the plans, when directed by the County Engineer. Normally, this would occur in limited areas with unusual topographic features or when special conditions occur that would affect the work.

(l) Grading and Drainage. Plans shall include existing and proposed drainage conditions according to the following requirements:

(1) Existing contours every five (5) feet as fine continuous or dashed lines and proposed contours every five (5) feet as solid lines;

(2) All cut and fill slopes;

(3) Retaining walls;

(4) Street grades in percent;

(5) Peak flows, for the 5-year and 100-year storms, entering and leaving the development and disposition of same;

(6) The 100-year flood line;

(7) Spot elevations on streets, top of curbs, retaining walls, lots and surface drainage improvements;

(8) Drainage arrows showing individual lot drainage; and

(9) Soil requirements printed thereon.

(m) Plan and Profile Sheets. Plan and profile sheets shall be prepared in accordance with the requirements set forth in Section 110.436.150, Street Improvement Plans: Plan and Profile Sheets.

(n) Details. All County standard details being used in the project shall be shown. Any additional details shall be shown as necessary for clarification of the improvements. Any necessary general notes shall be provided, including the following note: "All construction shall conform to County standards."

(o) Permit. A Revocable Permit shall be obtained from the Nevada Department of Transportation for any facilities encroaching upon a state right-of-way or for any drainage disposal on the right-of-way. (Allow a minimum of 30 days for obtaining a permit.)

(p) Drawings of Record. Drawings of record noting all of the changes in the improvements constructed from the design plan shall be provided. The drawings of record shall be submitted on a reproducible sepia-mylar reproduced from the original drawings that have been stamped and sealed thereon by a Nevada Registered Civil Engineer verifying the drawings of record conditions. The distance from the nearest sanitary sewer manhole to each "Y" or "T" intersection, and to the terminus of each service at the property line shall be shown.

(q) Private Streets. The County will not assume maintenance responsibility for access and drainage facilities and their associated structures located outside the limits of dedicated street rights-of-way or public easements, or which are not constructed to County standards for public facilities. Private facilities for access and drainage located on private street, lots or parcels are to be owned and maintained by the property owners.

[Added by Ord. 908, provisions eff. 10/15/94. Amended by Ord. 1064, provisions eff. 5/28/99.]

Section 110.436.150 Street Improvement Plans: Plan and Profile Sheets. Plan and profile sheets shall conform to the requirements set forth in this section.

(a) Scale. Minimum vertical scale shall be 1" = 10' and minimum horizontal scale shall be 1" = 40'.

(b) Streets and Access Roads. All information for streets and access roads shall be located on the plan and profile sheets in accordance to the provisions of this subsection.

(1) Name of street(s);

(2) Plan sections shall show the following information:

(i) Monuments;

(ii) Right-of-way widths;

(iii) Improvements;

(iv) Traffic control devices;

(v) Intersecting street(s);

(vi) Centerline stationing;

(vii) Horizontal curve data and stationing;

(viii) Benchmark locations and elevations; and

(ix) Existing facilities.

(3) Profile sections shall show the following information:

(i) Existing and proposed grades along centerline, including tangency slopes;

(ii) Vertical curve elevations and data;

(iii) Station and elevation of intersecting street(s); and

(iv) Existing facilities.

(c) Storm Drains. If located within a public street section, all information for storm drains on the street plan and profile sheets shall be shown in accordance with the provisions of this subsection.

(1) Plan sections showing storm drainage facilities shall include the following information:

(i) Location of pipe in relation to street centerline and/or easements and property lines;

(ii) Type and location of manholes and catch basins, showing the station and number and rim elevations of each;

(iii) Size, class and type of pipes;

(iv) Type, location and 5-year storm flow of inlet and outlet structures;

(v) Location and type of maintenance access roads to manholes or structures, where required;

(vi) Typical channel section, where required;

(vii) Benchmark locations and elevations; and

(viii) Existing utilities.

(2) Profile sections showing storm drainage facilities shall include the following information:

(i) Existing and finished surface grades and pipe profile showing type, size, slope, Q^5 (Volume of runoff from 5-year storm event), velocity at Q^5, and the hydraulic grade line if the pipe is under pressure;

(ii) For channels, the depth of flow for the 5-year and 100-year storms;

(iii) Manhole station, number, rim elevation, and invert elevation of all pipes entering or exiting and distance between manholes; and

(iv) Existing utilities with pertinent elevations.

(d) Sanitary Sewers. If located within a public street section, all information for sanitary sewers shall be shown on the street plan and profile sheets in accordance with the provisions of this subsection.

(1) Plan sections showing sanitary sewers shall include the following information:

(i) Location of pipe in relation to street centerline and/or easements and property lines;

(ii) Type and location of manholes, showing the station and number and rim elevation of each;

(iii) Size, class and type of pipe;

(iv) Service lateral locations with reference to station and property lines;

(v) Location and type of maintenance access roads, where required;

(vi) Benchmark locations and elevations; and

(vii) Existing utilities.

(2) Profile sections showing sanitary sewers shall include the following information:

(i) Existing and finished surface grades;

(ii) Pipe profile showing type and class, size, slope and velocity at peak flow;

(iii) Manhole station, number, rim elevation, and invert elevation of all pipes entering or exiting;

(iv) Distance between manholes; and

(v) Existing utilities with pertinent elevations.

[Added by Ord. 908, provisions eff. 10/15/94. Amended by Ord. 1064, provisions eff. 5/28/99.]

Article 438
GRADING STANDARDS

Sections:

110.438.00	**Purpose**
110.438.05	**Scope**
110.438.10	**Permits Required**
110.438.15	**Grading Fees**
110.438.20	**Exempted Work**
110.438.25	**Definitions**
110.438.30	**Hazards**
110.438.35	**Major Grading Permit Thresholds**
110.438.36	**Major Grading Permit Application Requirements**
110.438.37	**Minor Grading Permit Thresholds**
110.438.38	**Minor Grading Permit Application Requirements**
110.438.39	**Financial Security for Grading**
110.438.40	**Unpermitted Grading, Stop Activity Order, Notice of Violation and Enforcement, Penalties and Procedures**
110.438.41	**Serial Grading Not Requiring Grading Permits**
110.438.45	**Grading of Slopes**
110.438.50	**Cuts**
110.438.55	**Fills**
110.438.60	**Setbacks**
110.438.65	**Drainage and Terracing**
110.438.70	**Erosion Control**
110.438.75	**Grading Inspection**
110.438.77	**Phasing and Stabilization of Grading**
110.438.80	**Notification of Completion of Work**
110.438.85	**Grading within Floodplains and Drainage Ways**
110.438.95	**Grading Plan for Tentative Maps**
110.438.100	**NDEP Permits**

Section 110.438.00 Purpose. The purpose of this article is to safeguard life, limb, property and the public welfare as well as set standards that conserve the natural character of our hillsides and minimize disruption of the natural landscape, by regulating grading on private and public property.

[Added by Ord. 1499, provisions eff. 11/2/12.]

Section 110.438.05 Scope. This article sets forth rules and regulations to control grading which includes clearing and grubbing, excavation, grading and earthwork construction, fills and embankments; establishes the administrative procedure for issuance of permits; establishes the administrative procedure to respond to grading completed without first obtaining appropriate permits and provides for approval of plans and inspection of grading construction. The appropriate American Society for Testing and Materials (ASTM) materials testing standards or equivalent as approved by the County Engineer will be used as required to verify grading and earthwork construction. This article is enforceable by the County Engineer, Director of Community Development and the County Building Official as appropriate.

[Added by Ord. 1499, provisions eff. 11/2/12.]

Section 110.438.10 Permits Required. Except as specified in Section 110.438.20, no person shall do any grading in excess of fifty (50) cubic yards of material or 10,000 square feet of grading without first having obtained a grading permit from the Building Official as enforceable under the powers of Chapter 100 and from the Department of Community Development and the County Engineer as enforceable under the powers of Chapter 110. A separate permit shall be obtained for each site, and may cover both excavations and fills.

Table 110.438.10.1

Permits Required*

Grading of any amount within a special flood hazard area as defined by the County Engineer or within any drainage facility as defined herein	Grading permit** issued by Washoe County and possibly special use permit*** depending upon the amount proposed to be graded
Grading of fifty (50) cubic yards or less or ten thousand (10,000) square feet of grading or less (outside a special flood hazard area as defined by the County Engineer and outside of any drainage facility)	No permit required
Minor grading as defined at Section 110.438.37*	Grading permit issued by Washoe County
Major grading as defined at Section 110.438.35(a)	Special use permit approved by the Washoe County Board of Adjustment, or Planning Commission, followed by a grading permit issued by Washoe County

* Except as provided for in Section 110.438.20, Exempted Work.

** A grading permit is an administrative approval through the Department of Building and Safety with the approval of the Department of Community Development and the Engineering Division.

*** A special use permit requires the approval of the Board of Adjustment or Planning Commission after a public hearing.

[Added by Ord. 1499, provisions eff. 11/2/12.]

Section 110.438.15 Grading Fees. Grading fees shall be in accordance with Chapter 100.

[Added by Ord. 1499, provisions eff. 11/2/12.]

Section 110.438.20 Exempted Work. Exemption from the permit requirements of this article shall not be deemed to grant authorization for any work to be done in any manner in violation of the provisions of this article or any other laws or ordinances of this jurisdiction. A grading permit is not required for the following:

(a) An excavation below finished grade for basements and footings of a building, retaining wall or other structure authorized by a valid building permit. This shall not exempt any fill made with the material from such excavation or exempt any excavation having an unsupported height greater than five (5) feet after the completion of such structure.

(b) Cemetery graves.

(c) Refuse disposal sites controlled by other regulations.

(d) Excavations for wells.

(e) Excavations for utilities serving individual properties.

(f) Mining, quarrying, excavating, processing or stockpiling of rock, sand, gravel, aggregate or clay where established and provided for by law, provided such operations do not affect the lateral support or increase the stresses in or pressure upon any adjacent or contiguous property.

(g) Exploratory excavations under the direction of soil engineers or engineering geologists.

(h) Surface grading for leveling and maintaining existing roadways and driveways.

(i) Excavation for sanitary septic systems.

(j) Surface grading which does not alter the contour of the land for crop production use type.

(k) Clearing of vegetation within the recommended defensible space distance of a structure for fire protection, upon the approval of a defensible space plan by the applicable fire agency, in conformance with the currently adopted International Wildland-Urban Interface Code.

[Added by Ord. 1499, provisions eff. 11/2/12.]

Section 110.438.25 Definitions. For the purposes of this article, the definitions listed hereunder shall be construed as specified in this section.

Approval. "Approval" shall mean a determination in writing that the proposed work or completed work conforms to this article in the opinion of the County Engineer, Director of Community Development, Board of Adjustment or Planning Commission as identified in the applicable code section.

As-Graded. "As-graded" is the extent of surface conditions on completion of grading.

Bedrock. "Bedrock" is in-place solid rock.

Bench. "Bench" is a relatively level step excavated into earth material.

Bench Width. "Bench width" is measured from the closest points of two (2) adjacent retaining walls, as shown in Figure 110.438.25.BW.

Borrow. "Borrow" is earth material acquired from an off-site location for use in grading on a site.

Civil Engineer. "Civil engineer" is a professional engineer registered in Nevada to practice in the field of civil works.

Civil Engineering. "Civil engineering" is the application of the knowledge of the forces of nature, principles of mechanics and the properties of materials to the evaluation, design and construction of civil works.

Clearing. “Clearing” means the removal of surface vegetation from an area or tract of land.

Cut. “Cut” means a portion of land surface which earth has been removed or will be removed by excavation.

Figure 110.438.25.BW

Bench Width

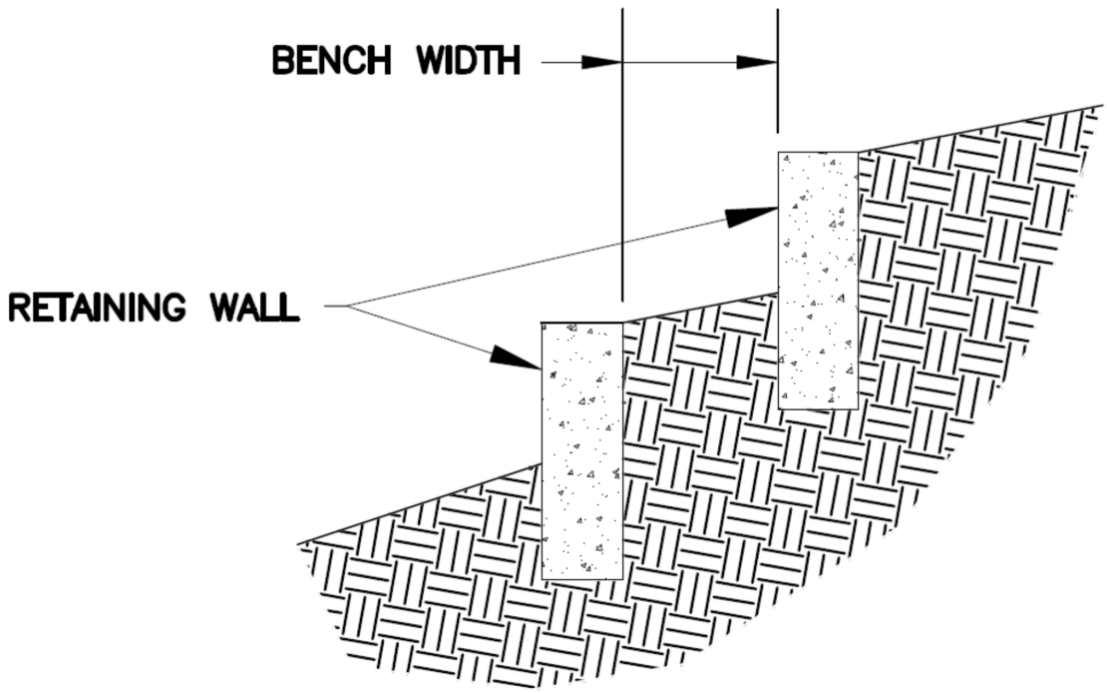

Source: Washoe County Engineering Division

Compaction. “Compaction” is the densification of a fill or subgrade by mechanical means.

Denuded. “Denuded” means an area that has been divested of covering or made bare.

Drainage Facility. “Drainage facility” means an engineered water conveyance facility which can include but not be limited to a paved or unpaved graded swale, a paved or unpaved graded ditch, a gutter, a culvert, a trench drain, a catch basin, a drop inlet, a bio retention swale, a detention/retention basin, an infiltration basin, a dam, a pond (especially those in a series), a wetland or a natural drainage-way with the approval of the County Engineer.

Earth Material. “Earth material” is any rock, natural soil or fill or any combination thereof.

Earthen Structure, Permanent. “Permanent earthen structure” means earthen material placed so as to create a berm, bench or similar structures:

(1) Which the plans show will remain at the completion of the work; or,

(2) Which will remain for more than one (1) year under separate permit and approvals for purposes of storage until a use for the soil is found elsewhere.

Earthen Structure, Temporary. "Temporary earthen structure" means earthen material placed so as to create a berm, bench or similar structures that the plans show will not remain at the completion of the work.

Engineering Geologist. "Engineering geologist" is a geologist experienced and knowledgeable in engineering geology.

Engineering Geology. "Engineering geology" is the application of geologic knowledge and principles in the investigation and evaluation of naturally occurring rock and soil for use in the design of civil works.

Erosion. "Erosion" is the wearing away of the ground surface as a result of the movement of wind, water or ice.

Excavation. "Excavation" is the mechanical removal of earth material.

Existing Grade. "Existing grade" is the grade prior to new grading activity.

Fill. "Fill" is a deposit of earth material placed by artificial means.

Final Stabilization. "Final stabilization" means the placement of permanent structures, pavement, parking areas, landscaped areas, revegetation and other required improvements upon areas previously disturbed by grading activity.

Finish Grade. "Finish grade" is the final grade of the site that conforms to the approved plan.

Gabion. "Gabion" means a container or basket fabricated of thick galvanized wire, filled with stone.

Geotechnical Engineer. See "soils engineer."

Grade. "Grade" is the vertical location of the ground surface.

Grading. "Grading" is any clearing, excavation, cutting, filling, or other disturbance of the natural state of the landform or natural vegetation and/or any combination thereof.

Grading, Major. "Major grading" is defined in Section 110.438.35.

Grading, Minor. "Minor grading" is defined in Section 110.438.37.

Key. "Key" is a designed compacted fill placed in a trench excavated in earth material beneath the toe of a proposed fill slope.

Professional Inspection. "Professional inspection" is the inspection required by this code to be performed by a civil engineer, soils engineer or engineering geologist licensed in Nevada. Such inspections include that performed by persons supervised by such engineers or geologists and shall be sufficient to form an opinion relating to the conduct of the work.

Retaining Wall Height. "Retaining wall height" is the exposed height of the retaining wall from finished grade at the bottom of the wall to the top of the wall (see Figure 110.438.25.RWH).

Riprap. "Riprap" consists of large pieces of angular rock (usually six (6) to thirty (30) inches in diameter) which have undergone only primary crushing and sizing; or larger, uncrushed pieces. Riprap is used to permanently stabilize slopes and construct erosion-control structures.

Rough Grade. "Rough grade" is the stage at which the grade approximately conforms to the approved plan.

Site. "Site" is any lot or parcel of land or contiguous combination thereof, under the same ownership, where grading is performed or permitted.

Figure 110.438.25.RWH

Retaining Wall Height

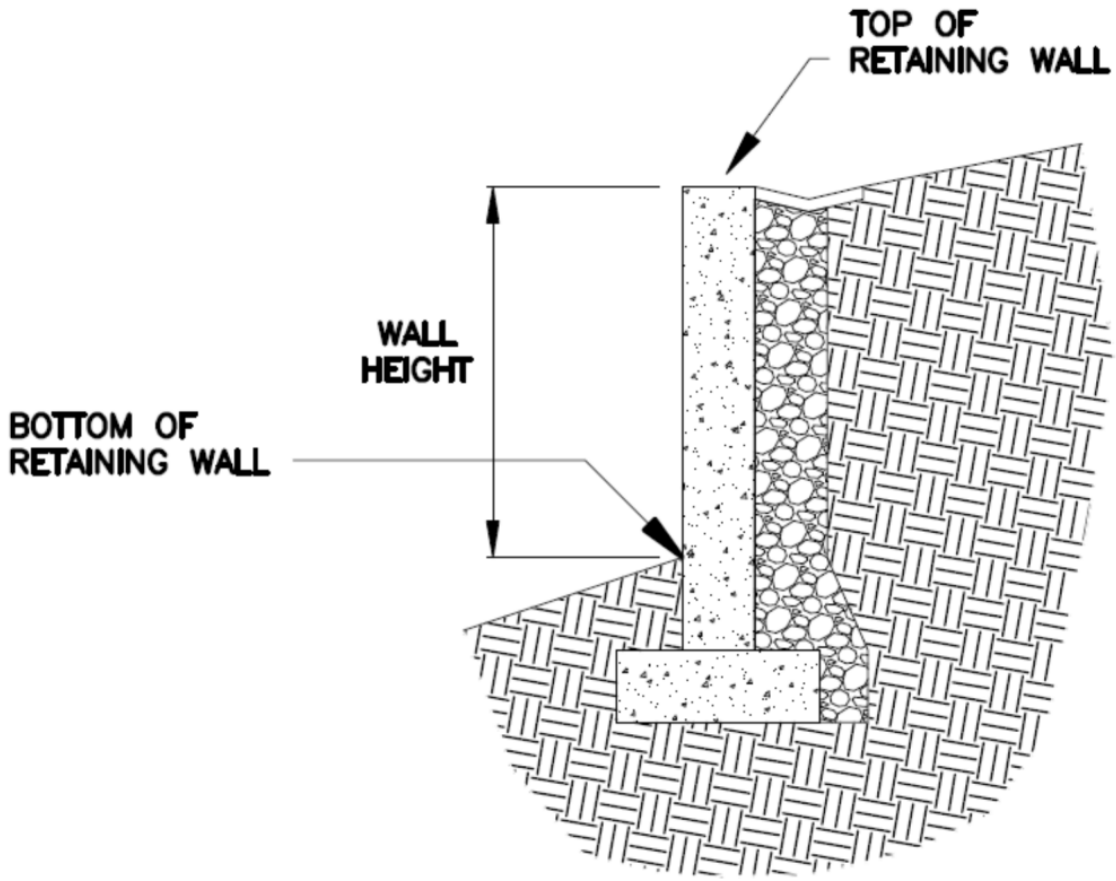

Source: Washoe County Engineering Division

Slope. "Slope" is an inclined ground surface, the inclination of which is expressed as a ratio of horizontal distance to vertical distance.

Soil. "Soil" is naturally occurring superficial deposits overlying bedrock.

Soils Engineer (or Geotechnical Engineer). "Soils engineer" or "geotechnical engineer" is an engineer experienced and knowledgeable in the practice of soils engineering (geotechnical engineering).

Soils Engineering (Geotechnical Engineering). "Soils engineering" or "geotechnical engineering" is the application of the principles of soils mechanics in the investigation, evaluation and design of

civil works involving the use of earth materials and the inspection or testing of the construction thereof.

Special Flood Hazard Area. "Special flood hazard area" means the land area covered by the floodwaters of the base flood is the Special Flood Hazard Area (SFHA) on NFIP (National Flood Insurance Program) maps. The SFHA is the area where the NFIP's floodplain management regulations must be enforced and the area where the purchase of flood insurance is mandatory.

Stabilized Soil. "Stabilized soil" means earth or soil treated by the application of other materials such as rock, chemical palliatives or vegetation to inhibit creation of dust and erosion by wind or water.

Terrace. "Terrace" is a relatively level step constructed in the face of a graded slope surface for drainage and maintenance purposes.

Terrace Width. "Terrace width" the width of a relatively level step constructed in the face of a graded slope or between two (2) retaining walls (see Figure 110.438.25.TW).

Figure 110.438.25.TW

Terrace Width

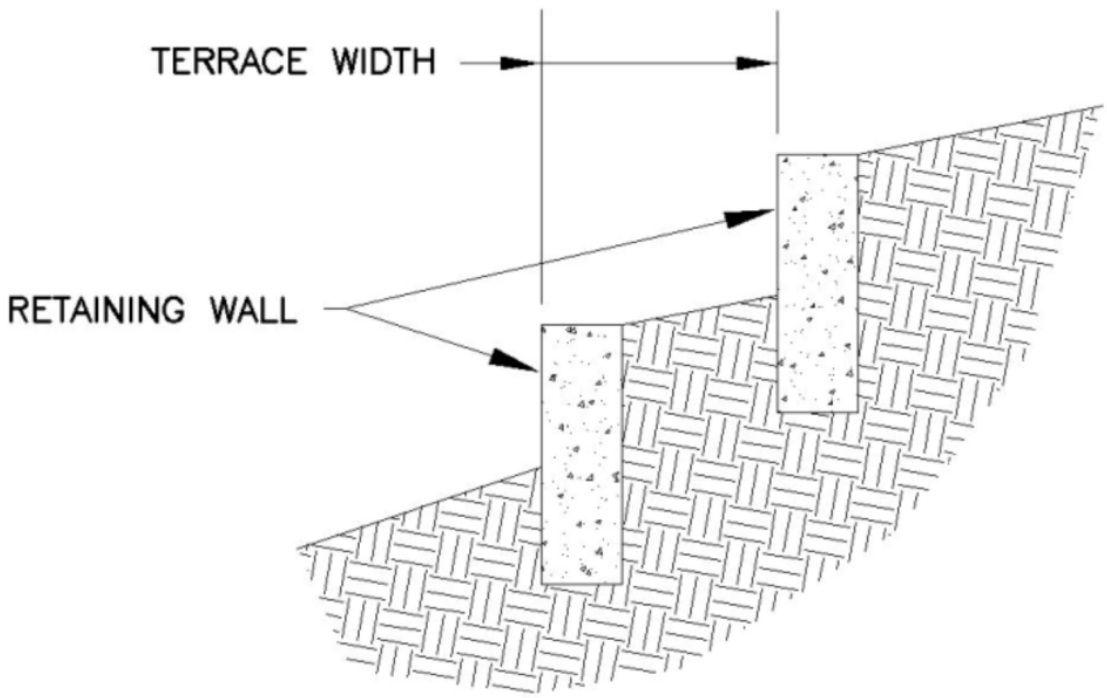

Source: Washoe County Engineering Division

[Added by Ord. 1499, provisions eff. 11/2/12.]

Section 110.438.30 Hazards. Whenever the Building Official or County Engineer determines that any existing excavation or embankment or fill on private property has become a hazard to life and limb, or endangers property, or adversely affects the safety, use or stability of a public way or

drainage channel, the owner of the property upon which the excavation or fill is located, or other person or agent in control of said property, upon receipt of notice in writing from the Building Official or County Engineer, shall within the period specified therein repair or eliminate such excavation or embankment to eliminate the hazard and to be in conformance with the requirements of this code.

[Added by Ord. 1499, provisions eff. 11/2/12.]

Section 110.438.35 Major Grading Permit Thresholds.

(a) Major Grading Permits (Grading Requiring a Special Use Permit). A special use permit, pursuant to Article 810, is required for all major grading. Major grading is any clearing, excavating, cutting, filling, grading, earthwork construction, earthen structures and storage of earth, including fills and embankments that meet or exceed any one (1) or more of the following thresholds (for the purposes of this section the County Engineer shall determine the slope of the project area):

(1) Grading on slopes of less than (flatter than) fifteen (15) percent:

(i) Area:

(A) Grading of an area of one (1) acre (43,560 square feet) or more on parcels less than six (6) acres in size; or

(B) Grading of twenty (20) percent or more (up to a maximum of four (4) acres) of the area of the parcel on parcels six (6) acres or greater in size; or

(C) Grading of and area of more than four (4) acres on a parcel of any size; or

(ii) Volume:

(A) Excavation of five thousand (5,000) cubic yards or more whether the material is intended to be permanently located on the project site or temporarily stored on a site for relocation to another, final site, or;

(B) Importation of five thousand (5,000) cubic yards or more whether the material is intended to be permanently located on the project site or temporarily stored on a site for relocation to another, final site; or

(2) Grading on slopes of fifteen (15) percent or greater (steeper):

(i) Area:

(A) Grading of one-half (0.5) acre (21,780 square feet) or more on parcels less than six (6) acres in size; or

(B) Grading of ten (10) percent or more of the area of the parcel on parcels six (6) acres or greater in size; or

(C) Grading of more than two (2) acres on any size parcel; or

(ii) Volume:

(A) Excavation of one thousand (1,000) cubic yards or more whether the material is intended to be permanently located on the project site or temporarily stored on a site for relocation to another, final site, or;

(B) Importation of one thousand (1,000) cubic yards or more whether the material is intended to be permanently located on the project site or temporarily stored on a site for relocation to another, final site; or

(3) Any driveway or road that traverses any slope of thirty (30) percent or greater (steeper); or

(4) Grading to construct a permanent earthen structure greater than four and one-half (4.5) feet in height within the required front yard setback, or greater than six (6) feet in height on the remainder of the property. The height of an earthen structure is measured from existing grade at the time of permit issuance; or

(5) Grading within a special flood hazard area that results in importation and placement of more than one thousand (1,000) cubic yards of fill material; or

(6) The creation of a dam structure that holds (retains) more than twenty-five thousand (25,000) cubic feet of water; or

(7) Any grading in the Critical Stream Zone Buffer Area (CSZBA) of any Significant Hydrologic Resource (SHR) as defined by Article 418, Significant Hydrologic Resources.

(b) A special use permit is not required for:

(1) Earthwork performed by the subdivider or developer of an approved subdivision, or other project~~s~~ that has completed a hearing process and review pursuant to which mitigation conditions could have been attached in the same manner as in the special use permit process.

(2) Public utilities within the public right-of-way or a public utility easement.

(3) The area under a building footprint, paved roadway or paved parking lot on natural slopes less than (flatter than) thirty (30) percent.

(4) The area and volume of excavation required for landscaped areas devoted to and maintained with a mixture of new native and ornamental plants such as turf, groundcover, shrubs, flowers, vines and trees, as well as additional complementary decorative features such as rocks, decorative pavement, fountains, pools, sculpture and decorative walls, as shown on approved grading plans, that include landscaping in

accordance with standards for commercial uses pursuant to Article 412, Landscaping.

(5) Areas disturbed by animal production, crop production, and the growing and harvesting of forest products that does not result in a change in elevation greater than three (3) feet.

(6) The area and volume of excavation required for the traveled way of driveways to single-family residences, on slopes less than fifteen (15) percent. Where native soil provides inadequate stabilization, the driveway shall be stabilized with a surfacing material and method satisfactory to the County Engineer. This does not exempt the area and volume of any adjacent cut and fill slopes.

(7) Grading for stabilization and restoration of areas damaged by natural disaster such as wildfire or flooding. Plans must include detailed stabilization specifications to the satisfaction of the County Engineer.

[Added by Ord. 1499, provisions eff. 11/2/12.]

Section 110.438.36 Major Grading Permit Application Requirements.

(a) Major Grading Permit Application Requirements. Major grading is equal to or greater than the limiting quantities for a special use permit as in Section 110.438.35. Application for a special use permit for grading (major grading) requires the following:

(1) Application for a major grading permit shall be accompanied by plans and specifications, and supporting data consisting of a soils engineering report and, when required by the County Engineer, an engineering geology report. The plans and specifications shall be prepared and signed by an individual licensed by the State of Nevada to prepare such plans or specifications. This individual shall be considered as the engineer or architect of record unless otherwise approved by the County Engineer.

(2) Specifications shall contain information covering construction and material requirements.

(3) Plans shall be drawn to scale and shall be of sufficient clarity to indicate the nature and extent of the work proposed and show in detail that the work will conform to the provisions of this code and all relevant laws, ordinances, rules and regulations. The first sheet of each set of plans shall give the location of the work, the name and address of the owner, and the person by whom they were prepared.

(4) Financial assurances acceptable to the County Engineer, prior to approval of a grading permit to commence work in accordance with an estimate acceptable to the County Engineer for completion of the grading request as defined at Section 110.438.39.

(5) The plans shall include the following information:

(i) General vicinity of the proposed site.

(ii) Property limits and accurate contours of existing ground and details of terrain and area drainage.

(iii) All finish grade elevations, high point locations, limiting dimensions, and finished contours to be achieved by grading, and all drainage swales, natural drainage ways, and drainage easement locations both on-site and immediately off-site as needed to verify the proposed drainage system.

(iv) Detailed plans of all surface and subsurface drainage devices, walls, cribbing, dams and other protective devices to be constructed with, or as a part of, the proposed work, together with a map showing the drainage area and the estimated runoff of the area served by any drains. All disturbed areas and cut and fill volumes shall be quantified and shown on the plans. Plans shall include diversion of runoff away from denuded slopes or other critical areas, as determined by the County Engineer, by means of barriers or ditches.

(v) Location of any buildings or structures on the property where work is to be performed and the location of any buildings or structures on land of adjacent owners that are within fifteen (15) feet of the property line or that may be affected by the proposed grading operations.

(vi) Recommendations included in the soils engineering report and the engineering geology report shall be incorporated in the grading plans or specifications. When approved by the County Engineer, specific recommendations contained in the soils engineering report and the engineering geology report, which are applicable to grading, may be included by reference.

(vii) The dates of the soils engineering and engineering geology reports together with the names, addresses and phone numbers of the firms or individuals who prepared the reports.

(viii) The destination of excavated material not used on site, how it will be used at its end destination and the location of temporary material storage site(s).

(ix) Plans shall provide for preservation of trees and natural vegetation, wherever practical.

(x) One (1) set of the following application materials and information shall be submitted in digital format. The digital files provided shall match those used for any exhibits and/or acreage information contained in the original paper application. Preferred file format will be compatible with ESRI Geographic Information System (GIS) software technology (AutoCAD files are acceptable but should only include the relevant layer information necessary to satisfy the requirements noted, and be formatted in a coordinate system acceptable to Washoe County).

(A) The location and limits of all grading work to be done including proposed contours, cuts, and fills (i.e. finished grade elevations);

(B) Proposed drainage patterns (if altering existing drainage patterns) and any walls or terraces (with proposed height); and,

(C) The location of proposed buildings and building envelopes.

(6) Soils Engineering Report. The soils engineering report required by Section 110.438.36(a) shall include data regarding the nature, distribution and strength of existing soils, conclusions and recommendations for grading procedures and design criteria for corrective measures, including buttress fills, when necessary, and opinion on adequacy for the intended use of site to be developed by the proposed grading as affected by soils engineering factors, including the stability of slopes.

(7) Engineering Geology Report. The engineering geology report required by Section 110.438.36(a) shall include an adequate description of the geology of the site, conclusions and recommendations regarding the effect of geologic conditions on the proposed development, and opinion on the adequacy for the intended use of sites to be developed by the proposed grading, as affected by geologic factors.

(8) Liquefaction Study. The County Engineer may require a geotechnical investigation and report addressing the potential for liquefaction, for construction of a dam or when, during the course of an investigation, both of the following circumstances are discovered:

(i) Shallow groundwater, fifty (50) feet or less, and

(ii) Unconsolidated sandy alluvium.

(9) Plans for major grading associated with the development of a commercial or industrial project or a residential subdivision shall include a plan to ensure that all disturbed areas are quickly stabilized to minimize the impact to human health by reducing or eliminating erosion and fugitive dust emissions. The Director of Community Development may require submittal of a phasing plan to avoid mass grading, where appropriate.

(10) Shall include specifications for final stabilization of all disturbed areas.

[Added by Ord. 1499, provisions eff. 11/2/12.]

Section 110.438.37 Minor Grading Permit Thresholds. A permit for minor grading is required for fifty (50) cubic yards of earthen material or greater or an area of ten thousand (10,000) square feet of grading of the land surface or greater, but less than the thresholds established for major grading.

[Added by Ord. 1499, provisions eff. 11/2/12.]

Section 110.438.38 Minor Grading Permit Application Requirements.

(a) Each application for a minor grading permit shall include grading plans that are drawn to scale and must be of sufficient clarity to indicate the nature and extent of the work proposed and show in detail that the work will conform to the provisions of this code and all relevant laws, ordinances, rules and regulations. The first sheet of each set of plans shall give the location of the work, the name and address of the owner, and the person by whom they were prepared. The plan shall include, as a minimum, the following information:

(1) General vicinity of the proposed site.

(2) Limiting dimensions and depth of cut and fill, including the quantities of all disturbed areas and volumes of cut and fill.

(3) Location of any buildings or structures where work is to be performed, and the location of any buildings or structures within fifteen (15) feet of the proposed grading.

(4) Location of all on-site drainage swales, natural drainage ways, and drainage easements both on-site and sufficient off-site locations as needed to verify the proposed drainage system.

(5) Property boundaries and accurate contours of existing ground and details of terrain and area drainage.

(6) Accurate contours of existing and proposed finish grading.

(7) Financial assurances as required in Section 110.438.36 for any grading in excess of one (1) acre.

(8) Specifications for final stabilization of all disturbed areas.

(b) Any application for a minor grading permit that lacks sufficient detail and clarity, in the opinion of the County Engineer, may result in the imposition of any or all requirements for plans for major grading as specified in Section 110.438.36, specifically including the requirement for submission of plans prepared by a individual licensed by the State of Nevada to prepare such plans.

[Added by Ord. 1499, provisions eff. 11/2/12.]

Section 110.438.39 Financial Security for Grading.

(a) Financial security in the amount required in Section 110.438.36(a)(4) and in Section 110.438.38(a)(7) shall be provided to the County Engineer to assure that the work, if not completed in accordance with the approved plans and specifications, will be corrected to eliminate hazardous conditions, to assure completion of the work, to assure reclamation for uncompleted or completed work, and to assure correction of illegal or nonconforming work.

(1) The amount of the financial security shall be the higher of:

(i) Two thousand dollars ($2,000) per acre of disturbed area, or

(ii) A reclamation cost estimate when required and approved by the County Engineer.

(2) The County Engineer may use the financial security at any point after cessation of work. The County Engineer may choose to suspend use of the bond or financial assurance if:

(i) Due diligence is shown to the County Engineer;

(ii) The County Engineer accepts a revised schedule for completion; or

(iii) Events beyond control of the permittee occur.

(3) The applicant shall include an agreement with the County that grading shall be done as shown on the approved plans or the applicant shall restore the project site to its original undisturbed condition.

(4) The financial security shall be released upon determination by the County Engineer of:

(i) Completion of work;

(ii) Completion of reclamation; or

(iii) Correction of illegal or nonconforming work.

(5) After financial security is spent in whole or in part on reclamation of uncompleted work, additional financial security will be required prior to resumption of work.

[Added by Ord. 1499, provisions eff. 11/2/12.]

Section 110.438.40 Unpermitted Grading, Stop Activity Order, Notice of Violation and Enforcement, Penalties and Procedures. Any major or minor grading, conducted prior to issuance of the appropriate permits as described in this article and any grading inconsistent with the amount, location and/or contour approved by such a permit, is unlawful, a misdemeanor, and a public nuisance under Washoe County Code 50.308.13. This article may be enforced by any of the remedies or procedures set out in Article 910, Enforcement. However, due to the major and irreversible impacts that grading may have on the lands of the County, special enforcement and stop activity order provisions set forth below apply:

(a) Special Enforcement Provisions. The procedural provisions in Article 910, Enforcement, regarding criminal, civil, or administrative enforcement apply to enforcement of grading violations, except as follows:

(1) The County Engineer or his/her designee is hereby designated as an "enforcement official" for enforcement of this article, in addition to a peace officer, or any person authorized to issue citations in Article 910, Enforcement. The County Engineer or his/her designee shall be the primary enforcement official charged with enforcement of this article.

(2) A Notice of Correction shall not be used. If a violation of this article is observed, the enforcement official will bypass the notice of correction and issue a notice of violation or notice of abatement.

(3) Mediation is not authorized in grading violation cases.

(4) If administrative enforcement procedures are used, a hearing before a hearing officer shall automatically be scheduled to occur within forty-five (45) days after the notice of violation or abatement is issued.

(5) If an appeal of the issuance of a notice of violation or notice of abatement is made to the Board of Adjustment or an appeal (judicial review) of the Board of Adjustment's decision is requested, during the time period in which that appeal or judicial review takes place:

(i) Unless otherwise agreed, all grading work in progress must stop pending the outcome of the appeal and the enforcement official may issue and enforce a stop activity order;

(ii) All criminal, civil or administrative proceedings shall be suspended pending the outcome of the Board of Adjustment appeal hearing, except for the issuance or enforcement of a stop activity order, and further except for the commencement of abatement proceedings as provided below.

(iii) If the Board of Adjustment affirms the issuance of the notice of violation or abatement, the criminal, civil or administrative procedures shall be resumed in order to obtain an order directing abatement and/or assessing penalties. If the Board or Court reverses the issuance of the notice of violation/abatement, all proceedings shall be terminated.

(6) The enforcement official may suspend or amend any provision in a stop activity order or notice of violation/abatement.

(7) During any of the proceedings described above, if the grading in question has caused or imminently will cause a dangerous condition as defined in NRS 244.3605, the County may, abate the condition to the extent necessary to avoid causing injury to or endangering the health, life, property or safety of the general public. An example would be grading that obstructs or interferes with drainage facilities.

(b) Stop Activity Order. Upon reasonable suspicion that unpermitted grading has occurred or is occurring, a stop activity order may be issued by a peace officer, any person authorized to issue citations in Article 910, Enforcement, or the County Engineer and/or the County Engineer's designee (the "enforcement official"). Upon issuance of a stop activity order all grading activity on the subject site must cease. Any person who has been served with a stop activity order and continues to do any work in violation of the order, except work that is directed or approved by the enforcement official and is immediately necessary to remove a violation or unsafe condition, shall be guilty of a misdemeanor, and each day or part of a day that the person continues to perform the work shall be a separate offense.

(1) The stop activity order shall:

(i) Describe the location and nature of grading observed and allege that it requires a grading permit or amendment of a grading permit.

(ii) Direct that all grading activities immediately stop until further notice and that violation of the stop activity order is punishable as a public nuisance.

(iii) Direct that the property owner or designee appear before the County Engineer within a specified number of working days [not to exceed ten (10)] to demonstrate that his/her conduct does not violate this code, or to appear before the County Building Official and/or the Director of Community Development to apply for the appropriate grading permit or other required authorization.

(iv) State the possible consequences of a failure to obey the order.

(2) Remediation Order. The County Engineer and/or the County Engineer's designee may modify the stop activity order by issuance of a "remediation order" to include immediate steps to be taken, and a time schedule for those steps, to remediate any identified threats to the health, safety, and welfare of the public caused by the unpermitted grading. Failure to comply with the remediation order may result in Washoe County undertaking the necessary civil, criminal and/or administrative actions as determined by the County Engineer and/or the enforcement official and authorized by Section 110.438.30.

(3) Rescinding of Stop Activity Order. A stop activity order may only be rescinded by:

(i) The enforcement official, when sufficient information has been provided for the County Engineer to determine that a grading permit is not required or upon the acquisition of all necessary permits, by the violator, or upon other circumstances at the discretion of the enforcement official when the intent of this code has been met, or

(ii) Order of an administrative hearing officer pursuant to Washoe County Code Chapter 125, or

(iii) Order of a court of competent jurisdiction.

(4) If the violator does not immediately stop the work described in the stop activity order the County may seek an immediate civil injunction against further grading and possible appropriate remedies to abate unpermitted grading or may pursue other criminal remedies.

[Added by Ord. 1499, provisions eff. 11/2/12.]

Section 110.438.41 Serial Grading Not Requiring Grading Permits. Any grading of less than fifty (50) cubic yards and/or grading of less than ten thousand (10,000) square feet, shall be limited to one (1) grading project each three (3) years on any parcel of land without the issuance

of a grading permit. Serial grading that results in a cumulative total greater than fifty (50) cubic yards and/or grading of more than ten thousand (10,000) square feet within any three (3) year period shall require approval of one (1) or more permits based upon the cumulative amount of all such grading.

[Added by Ord. 1499, provisions eff. 11/2/12.]

Section 110.438.45 Grading of Slopes. The standards in this section shall apply to all grading for subdivision improvements, special use permits, or other discretionary permits. The standards in this section shall also apply to all grading for building and grading permits upon or adjacent to lots less than or equal to five (5) acres in size, and to all grading within one hundred (100) feet of all property lines on parcels greater than five (5) acres in size.

(a) Grading shall not result in slopes in excess of, or steeper than, three horizontal to one vertical (3:1) except as provided below:

(1) Storm drainage improvements.

(2) Cut and fill slopes less than thirty (30) inches in height.

(3) Cut slopes proposed to be located behind civic, commercial and industrial buildings, when the cut slope is shorter than and substantially screened by the proposed building. Such slopes are subject to approval of a Director's Modification of Standards by the Director of Community Development.

(4) The County Engineer may waive this requirement for up to fifteen (15) percent of the length of the cut and/or fill where the presence of rock or, in his determination, other practical hardships exists.

(b) Within the required yard setbacks fills shall not differ from the natural or existing grade by more than forty-eight (48) inches (see Figure 110.438.45.1).

Figure 110.438.45.1

GRADING

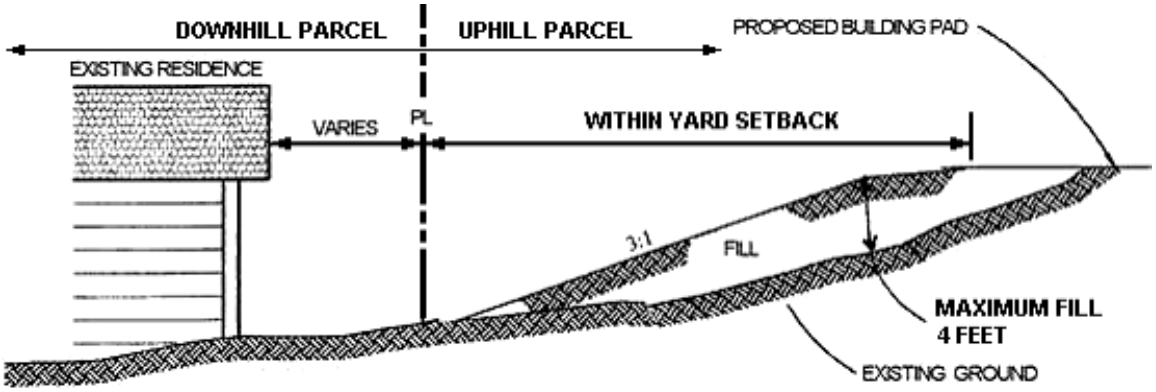

Source: Washoe County Engineering Division

(c) Finish grading shall not vary from the natural slope by more than ten (10) feet in elevation. Exposed finish grade slopes greater than ten (10) feet in height may be allowed upon the approval of a director's modification of standards by the Director of Community Development upon recommendation by the County Engineer.

(1) Approval of a director's modification of standards requires a determination that:

(i) The proposed cut and/or fill slopes include stepped-back structural containment (retaining walls) that form terraces, and;

(ii) The proposed terraces include landscaping, are a minimum of six (6) feet in width, and have a slope flatter than three horizontal to one vertical (3:1).

(iii) Retaining walls used to create terraces are limited to a maximum vertical height of ten (10) feet, when located outside any required yard setback.

(iv) Terrace widths shall be at least sixty (60) percent of the height of the higher of the two (2) adjacent retaining walls.

(v) Bench widths shall be at least four (4) feet.

(2) An exception to the terrace width may be allowed subject to the approval of a director's modification of standards by the Director of Community Development, upon recommendation by the County Engineer for cuts into stable rock, supported by a geotechnical report.

(d) Within the front yard setback area of any parcel with a residential use or zoned for residential use, retaining walls are limited to a maximum height of four and one-half (4.5) feet.

(e) Within the side and rear yard setback areas of any parcel with a residential use or zoned for residential use, as well as the front yard setback of any parcel zoned for commercial or industrial use, retaining walls are limited to a maximum height of six (6) feet.

(f) Within the side and rear yard setback areas of any parcel zoned for commercial or industrial use, retaining walls are limited to a maximum height of eight (8) feet.

(g) Utilize a gradual transition or "rounding or contouring" of the manufactured slope at the intersection of a manufactured cut or fill slope and a natural slope. Engineered slopes shall not intersect natural slopes at an angle greater than forty-five (45) degrees (see Figure 110.438.45.2).

(h) Visually integrate all slope faces (cut or fill) into the natural terrain by a gradual transition or "contouring/rounding" of the manmade landforms into the natural terrain. To the extent practicable ensure that hillside grading results in undulating naturalistic appearance, consistent with the surrounding undisturbed terrain (see Figure 110.438.45.3).

Figure 110.438.45.2

SLOPE INTERSECTION

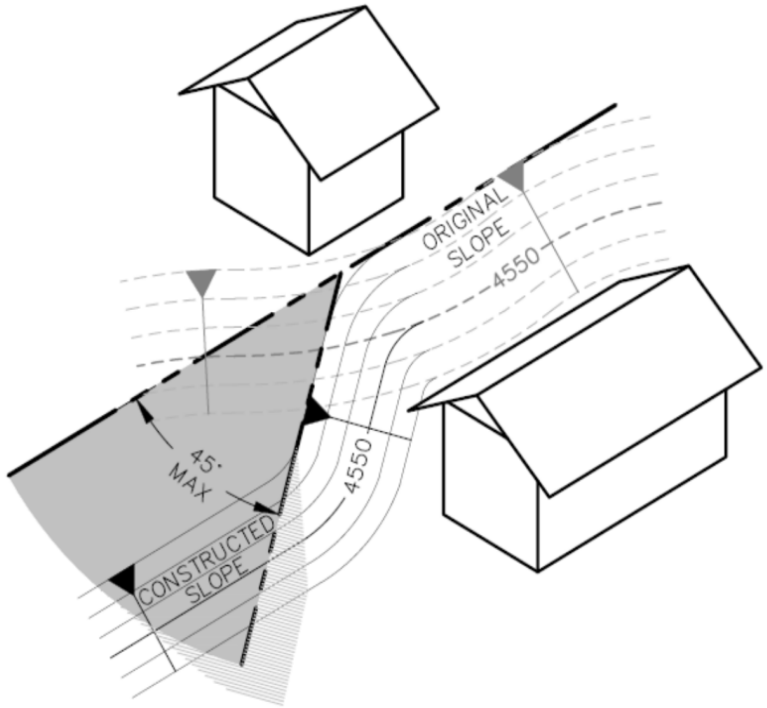

Source: Washoe County Engineering Division

Figure 110.438.45.3

SLOPE INTERSECTION

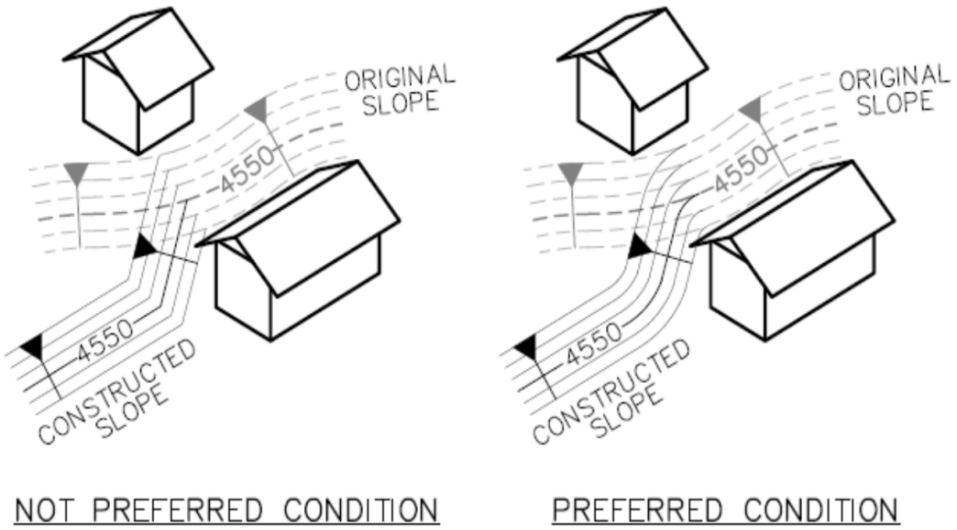

Source: Washoe County Engineering Division

(i) Cut and/or fill slopes adjacent to roadways shall be flatter than three horizontal to one vertical (3:1) for the distance of the required American Associates of State Highway Transportation Officials (AASHTO) clear zone.

(j) Ensure that when any cut is made for a structure pad, the exposed cut shall not exceed the height of the structure. The area of the cut that will be screened at buildout (by natural landscape, required landscaping and the structure) shall not be less than ninety (90) percent of the total area of the cut.

(k) Proposed storm drainage improvements may include riprap and may include slopes steeper than three horizontal to one vertical (3:1) as approved by the County Engineer.

[Added by Ord. 1499, provisions eff. 11/2/12.]

Section 110.438.50 Cuts. In addition to the requirements in Section 110.438.45, cut slope design and construction will also be based on a geotechnical report as required by Section 110.438.36 unless not required by the County Engineer.

(a) The use of riprap and gabions as a mechanical stabilization for cut slopes is prohibited, except where essential for safe access, for passage within the rights-of-way of public roads, and for storm drainage control device(s).

(b) Unless covered by soil and revegetated, all cuts into stable rock, greater than four (4) feet in height, and all riprap slopes constructed for roadways and utilities shall be treated with a permanent rock stain product to match the color of the adjacent undisturbed geology to the greatest extent practicable.

(c) All cuts into stable rock, that are proposed to remain at the end of construction, shall be treated with a permanent rock stain product to match the color of the adjacent undisturbed geology to the greatest practical extent.

(d) Modification or elimination of the standards in (b) and (c) above, may be allowed subject to the approval of a directors modification of standards upon his/her determination that the cut will be in the character of the adjacent, undisturbed land.

[Added by Ord. 1499, provisions eff. 11/2/12.]

Section 110.438.55 Fills. Fills shall be constructed in accordance with Section 110.438.45. Fill slope design and construction will also be based on a geotechnical report as in Section 110.438.36(a)(6) and (7) unless determined not required by the Building Official or the County Engineer and, as applicable, the following general specifications:

(a) Preparation of Ground. Fill slopes shall not be constructed on natural slopes steeper than two units horizontal to one unit vertical (2:1) (50 percent slope). The ground surface shall be prepared to receive fill by:

(1) Removing vegetation.

(2) Removing fill deemed unsuitable by the County Engineer.

(3) Removing topsoil and other unsuitable materials.

(4) By scarifying to provide bond with the new fill.

(5) Where slopes are steeper than five units horizontal to one unit vertical (5:1) (20 percent slope) and the height is greater than five (5) feet, by benching into sound bedrock or other competent material as determined by the soils engineer.

(6) Drainage facilities shall be provided at the toe of fills in accordance with Section 110.438.65.

(7) When fill is to be placed over a cut or bench, the cut or bench shall be accepted by the soils engineer or engineering geologist as a suitable foundation for fill prior to fill placement.

(b) Fill Material. Detrimental amounts of organic material, as determined by the geotechnical engineer, shall not be permitted in fills. Except as permitted by the Building Official or County Engineer, no rock or similar irreducible material with a maximum dimension greater then twelve (12) inches shall be buried or placed in fills. Exception: The Building Official or County Engineer may permit placement of larger rock when the soils engineer properly devises a method of placement, and continuously inspects its placement and approves the fill stability. The following conditions shall also apply:

(1) Prior to issuance of the grading permit, potential rock disposal areas shall be delineated on the grading plan.

(2) Rock sizes greater than twelve (12) inches in maximum dimension shall be ten (10) feet or more below grade, measured vertically.

(3) Rocks shall be placed so as to ensure filling of all voids with well-graded soil.

(c) Compaction. All fills shall be compacted to a minimum of ninety (90) percent of maximum dry density and in accordance with the project soils report.

[Added by Ord. 1499, provisions eff. 11/2/12.]

Section 110.438.60 Setbacks. Cut and fill slopes shall be set back from site boundaries in accordance with this section. Setback dimensions shall be horizontal distances measured perpendicular to the site boundary.

(a) Top of Cut Slope. The top of cut slopes shall not be made nearer to a site boundary line than one-fifth (1/5) of the vertical height of cut with a minimum of two (2) feet and a maximum of ten (10) feet. The setback may need to be increased for any required interceptor drains (see Figure 110.438.60.TOCS).

Figure 110.438.60.TOCS

TOP OF CUT SLOPE

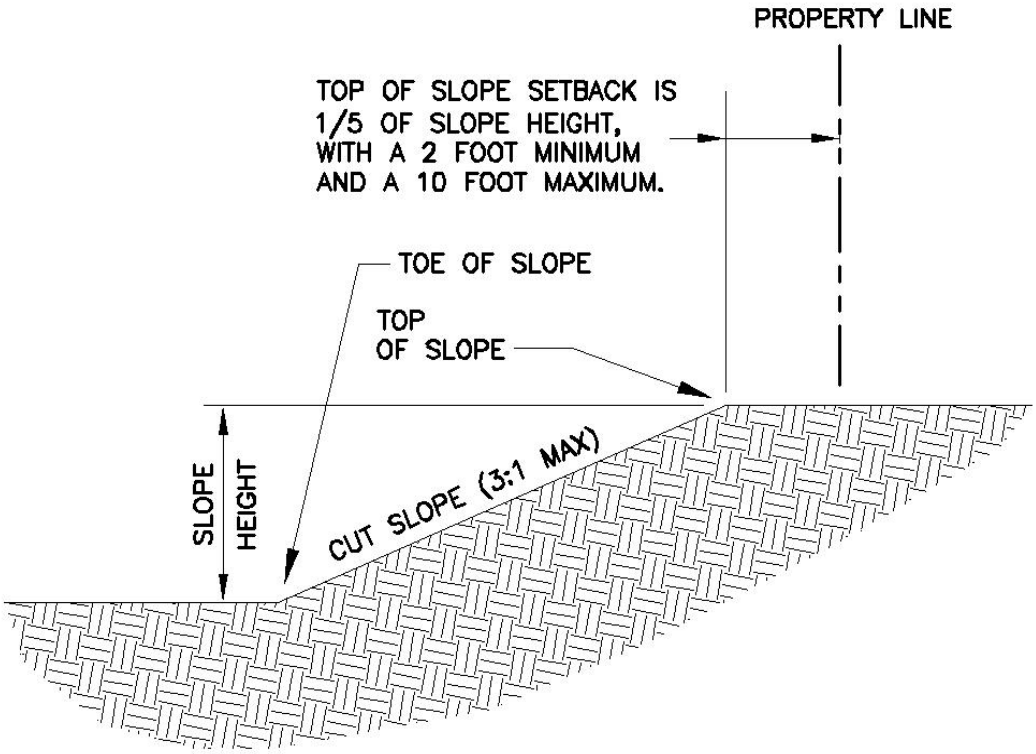

Source: Washoe County Engineering Division

(b) Toe of Fill Slope. The required setback from the toe of the slope to the site boundary line shall be one-half (1/2) the height of the slope with a minimum of two (2) feet and a maximum required setback not to exceed twenty (20) feet (see Figure 110.438.60.TOFS). Where a fill slope is to be located near the site boundary and the adjacent off-site property is developed, special precautions shall be incorporated in the work as the Building Official or County Engineer deems necessary to protect the adjoining property from damage as a result of such grading. These precautions may include but are not limited to:

(1) Additional setbacks.

(2) Provisions for retaining walls or slough walls.

(3) Mechanical or chemical treatment of the fill slope surface to minimize erosion.

(4) Provisions for the control of surface waters.

Figure 110.438.60.TOFS

TOE OF FILL SLOPE

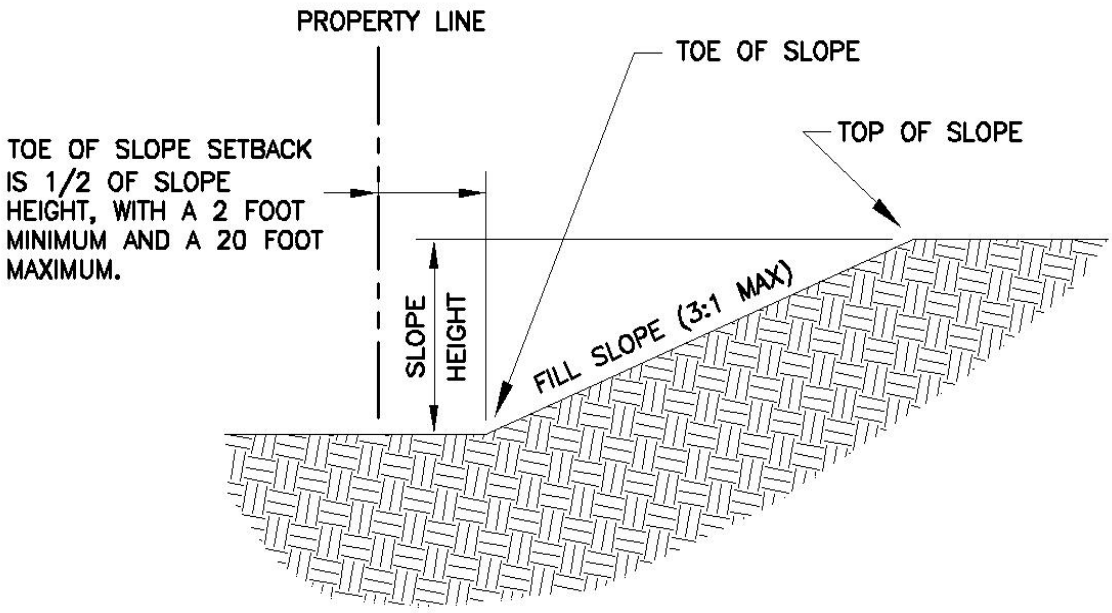

Source: Washoe County Engineering Division

(c) Modification of Slope Location. The Building Official or County Engineer may approve alternate setbacks subject to the approval of a director's modification of standards by the Director of Community Development, upon recommendation by the County Engineer. The Building Official or County Engineer may require an investigation and recommendation by a qualified professional to demonstrate that the intent of this section has been satisfied.

[Added by Ord. 1499, provisions eff. 11/2/12.]

Section 110.438.65 Drainage and Terracing. Drainage facilities and terracing shall be shown on the approved grading plan.

(a) Subsurface Drainage. Cut and fill slopes shall be provided with subsurface and surface drainage as necessary for stability.

(b) Drainage Disposal. All drainage facilities shall be designed to carry waters to the nearest acceptable drainage way approved by the Building Official or County Engineer. Erosion of ground in the area of discharge shall be prevented by installation of erosion control facilities. Building pads shall have a drainage gradient of two (2) percent toward approved drainage facilities, unless waived by the Building Official or County Engineer.

(c) Interceptor Drains. Paved interceptor drains shall be installed along the top of cut slopes and/or within terraces as recommended in the approved soils report.

[Added by Ord. 1499, provisions eff. 11/2/12.]

Section 110.438.70 Erosion Control. Except in the case where bedrock is exposed, the faces of cut and fill slopes shall be prepared and maintained with landscaping and/or revegetation to control against erosion. This control may consist of plantings such as native grasses, and drought-resistant trees, shrubs, and ground covers, which shall be planted in random groupings to reduce the constructed character of manufactured slopes. Bark mulches and stone cobble may be allowed to cover fifty (50) percent of exposed bare ground. The landscaping protection for the slopes shall be installed as soon as practicable. However, the slopes shall be treated with a dust palliative if left undeveloped for more than thirty (30) days and shall be revegetated if left undeveloped for more than ninety (90) days. Where necessary, check dams, cribbing, or other devices or methods shall be employed to control erosion and provide safety. Any grading operation which will disturb an area of one (1) acre or more also requires a Nevada Department of Environmental Protection (NDEP) permit as per Section 110.438.100 and a dust control permit issued by the Washoe County Health Department, Air Quality Management Division.

[Added by Ord. 1499, provisions eff. 11/2/12.]

Section 110.438.75 Grading Inspection. Major grading operations for which a permit is required shall be subject to inspection by the Building Official and/or County Engineer. Professional inspection of grading operations shall be provided by the civil engineer, soils engineer and the engineering geologist retained to provide such services in accordance with Section 110.438.75(d), and as required by the Building Official or County Engineer for minor grading [Section 110.438.35(c)].

(a) Civil Engineer. The civil engineer shall provide professional inspection within such engineer's area of technical specialty, which shall consist of observation and review as to the establishment of line, grade and surface drainage of the development area. If revised plans are required during the course of the work, they shall be prepared by the engineer of record.

(b) Soils Engineer. The soils engineer shall provide professional inspection within such engineer's area of technical specialty, which shall consist of observation during grading and testing for required compaction. The soils engineer shall provide sufficient observation during the preparation of the natural ground and placement and compaction of the fill to verify that such work is being performed in accordance with the conditions of the approved plan and the appropriate requirements of this section. Revised recommendations relating to conditions differing from the approved soils engineering and engineering geology reports shall be submitted to the permittee, the Building Official or County Engineer and the engineer of record.

(c) Engineering Geologist. The engineering geologist shall provide professional inspection within such engineer's area of technical specialty, which shall include professional inspection of the bedrock excavation to determine if conditions encountered are in conformance with the approved report. Revised recommendations relating to conditions differing from the approved engineering geology report shall be submitted to the soils engineer.

(d) Permittee. The permittee shall be responsible for the work to be performed in accordance with the approved plans and specifications and in conformance with the provisions of this code, and the permittee shall engage consultants to provide professional inspections on a timely basis. The permittee shall act as a coordinator between the consultants, the contractor and the Building Official or County Engineer. In the event of changed conditions, the permittee shall be

responsible for informing the Building Official or County Engineer of such change and shall provide revised plans for approval.

(e) Building Official. The Building Official and/or County Engineer shall inspect the project at the various stages of work requiring approval to determine that adequate control is being exercised by the professional consultants.

(f) Notification of Noncompliance. If, in the course of fulfilling their respective duties under this article, the civil engineer, the soils engineer or the engineering geologist find that the work is not being done in conformance with this article or the approved grading plans, the discrepancies shall be reported immediately in writing to the permittee and to the Building Official or County Engineer.

(g) Transfer of Responsibility. If the civil engineer, the soils engineer or the engineering geologist of record is changed during grading, the work shall be stopped until the replacement has agreed in writing to accept their responsibility within the area of technical competence for approval upon completion of the work. It shall be the duty of the permittee to notify the Building Official or County Engineer in writing of such change prior to the recommencement of such grading.

[Added by Ord. 1499, provisions eff. 11/2/12.]

Section 110.438.77 Phasing and Stabilization of Grading. Grading projects shall be completed in phases and quickly stabilized to minimize the impact to human health by reducing or eliminating the amount of erosion and fugitive dust emissions that may be created.

(a) Required Phasing. Grading for all projects shall be designed and completed such that final stabilization shall commence immediately, for the entire disturbed area, upon completion of grading for each phase of the project. The plan for stabilization and phasing must be acceptable to the Director of Community Development and the County Engineer.

(b) Non-Phased Projects. Grading projects may be completed in one (1) phase, upon the determination by Washoe County staff that all of the following are true:

(1) The project has been designed to be completed as one (1) phase;

(2) The entire project area will be stabilized by means of permanent structures, pavement, parking areas, landscaped areas, revegetated areas and other required improvements prior to the issuance of a certificate of occupancy for the proposed use;

(3) Areas reserved for future building footprints within commercial and industrial developments are stabilized by means of appropriate soil stabilization methods to the satisfaction of the County Engineer; and,

(4) Financial assurances have been provided to the County Engineer to ensure appropriate continuous stabilization.

[Added by Ord. 1499, provisions eff. 11/2/12.]

Section 110.438.80 Notification of Completion of Work.

(a) Restrictions Pending Completion. Notification and inspection is required before the expiration of the permit to determine whether work is completed in accordance with the final approved grading plan. No final permit, final inspection or certificate of occupancy may be issued for other structures on the property until the grading permit has received a final inspection to determine that the grading work is complete or, if uncompleted, that reclamation work has been completed.

(b) Engineering Certification. Prior to the scheduling of certain inspections, the Building Official or County Engineer shall require that a Nevada registered civil engineer or a Nevada registered land surveyor submit a certification letter on all parcels for the following:

(1) Soils investigation report indicating soils classification and design prior to the foundation inspection.

(2) Elevation, grading and drainage certification per the approved construction plans prior to the issuance of a certificate of occupancy. Exception: On parcels two (2) acres or more which do not affect the drainage on other properties, the Building Official or County Engineer may waive this certification requirement.

(3) Foundation elevation and building setback certification as per the approved plot plan prior to the foundation inspection.

(c) Permittee Notification to Building Official Or County Engineer. The permittee or his agent shall provide written verification to the Building Official or County Engineer that the grading work has been completed in accordance with approved plans and specifications. Final approval shall not be given until all work, including installation of all drainage facilities and their protective devices, and all erosion control measures have been completed in accordance with the final approved grading plan and the required reports have been submitted to the Building Official and/or County Engineer by the permittee or his agent.

[Added by Ord. 1499, provisions eff. 11/2/12.]

Section 110.438.85 Grading within Floodplains and Drainage Ways.

(a) Grading for development within Federal Emergency Management Agency (FEMA) designated floodplains shall comply with Article 416, Flood Hazards.

(b) Grading for development within floodplains other than those designated by FEMA and within natural drainage ways shall comply with Article 420, Storm Drainage Standards.

[Added by Ord. 1499, provisions eff. 11/2/12.]

Section 110.438.95 Grading Plan for Tentative Maps. Grading plan submittals for tentative maps shall be in accordance with Article 608, Tentative Subdivision Maps.

[Added by Ord. 1499, provisions eff. 11/2/12.]

Section 110.438.100 NDEP Permits. A permit from the Nevada Department of Environmental Protection (NDEP) is required when grading operations will disturb an area of one (1) acre or more. As a minimum, it is required that the receipt showing the NDEP permit fee has been paid shall be submitted to the County Engineer.

[Added by Ord. 1499, provisions eff. 11/2/12.]

[Article 438, Grading Standards, updated in its entirety by Ord. 1499, provisions eff. 11/2/12.]

Article 440
PUBLIC SCHOOL FACILITIES DESIGN STANDARDS

Sections:

110.440.00	**Purpose**
110.440.05	**General**
110.440.10	**Height Standards**
110.440.15	**Building Setbacks**
110.440.20	**Landscaping Requirements**
110.440.25	**Parking Requirements**

Section 110.440.00 Purpose. The purpose of this article, Article 440, Public School Facilities Design Standards, is to set forth the regulations governing the development of any new public school building or for any addition to or alteration of an existing public school building.

Section 110.440.05 General. The development standards established by this article have been developed in cooperation with the Washoe County School District and the Cities of Reno and Sparks. Where the specific standards established by this article are silent, general Development Code standards shall apply. The Public School Facilities (Education Use Type) are allowed, without discretionary review, in all regulatory zones, with the exception of "Industrial" and "Open Space," subject to one or more site plan review meetings between the Washoe County Planning and Development Division and the Washoe County School District. Site plan review meetings must take place at least ninety (90) days prior to submittal of building permit applications. Site plan review meetings are intended to ensure that public school facilities are compatible with and complimentary to the character of the surrounding area.

Section 110.440.10 Height Standards. There is no maximum building height for public school buildings, which provides for the flexibility to build unique facilities in urban core areas. Proposed building heights will be consistent with the character of the surrounding community.

Section 110.440.15 Building Setbacks. Public school buildings shall be set back not less than one (1) foot for every foot in building height (measured at the highest point) when adjacent to residential uses, or to land with zoning that allows residential uses. Each elevation will determine the amount of setback to the adjacent property line. School buildings may be set at a zero (0) foot setback when adjacent to non-residential uses. The site plan review process will ensure that there is enough distance to enable access for maintenance of the buildings.

Section 110.440.20 Landscaping Requirements. Landscaping details will be determined based on type of school, community character, and site specifics such as slope and soil quality. These details will be determined during a pre-site plan review meeting between the Planning and Development Division and school representatives. The meeting shall take place not less than ninety (90) days prior to anticipated submittal of building permit applications. Up to twenty (20) percent of the site may be required to be landscaped.

Section 110.440.25 Parking Requirements. Education uses shall provide at least the minimum number of parking spaces as provided below. All parking, loading and maneuvering areas shall

be permanently paved with asphalt or concrete, and shall be permanently striped. All other relevant standards, such as Americans with Disabilities Act (ADA) and American National Standards Institute (ANSI) shall also be met.

(a) **High School.** One (1) space for each one and one-half (1.5) students, and one (1) space for each faculty and staff member based on design capacity, including any additional classrooms that may be added at a later date.

(b) **Junior/Middle School.** Two (2) spaces per classroom plus one (1) space per one hundred (100) students based on design capacity, including any additional classrooms that may be added at a later date.

(c) **Elementary School.** One (1) space per classroom and one (1) space per one hundred (100) students based on design capacity, including any additional classrooms that may be added at a later date.

[Added by Ord. 1524, provisions eff. 03/07/14.]

Division Five - Signs
CONTENTS

	Page
Signs: Title and Contents	500-1
Billboard Regulations	502-1
Sign Regulations	504-1

Article 500
SIGNS: TITLE AND CONTENTS

Sections:

110.500.00	**Title**
110.500.05	**Contents**

Section 110.500.00 Title. Division Five of Chapter 110, Development Code, is entitled Signs.

Section 110.500.05 Contents. Division Five consists of the following articles:

(a) ARTICLE 500 SIGNS: TITLE AND CONTENTS

(b) ARTICLE 502 BILLBOARD REGULATIONS

(c) ARTICLE 504 SIGN REGULATIONS

[Amended by Ord. 1019, provisions eff. 6/5/98; Ord.1288, provisions eff.3/24/06.]

Article 502
BILLBOARD REGULATIONS

Sections:

110.502.00	**Purpose**
110.502.05	**Definitions**
110.502.10	**General Standards**
110.502.15	**Permits: General Requirements**
110.502.20	**Permit Issuance and Standards for New Signs**
110.502.23	**Bus Shelters**
110.502.25	**Bringing a Nonconforming Sign into Conformance**
110.502.30	**Continued Use of Nonconforming Signs**
110.502.35	**Termination of Right to Use Nonconforming Sign**
110.502.40	**Total Number of Off-Premise Signs Permitted in Unincorporated Portion of Washoe County**
110.502.45	**Community Development Director's and County Building Official's Powers; Right of Entry**
110.502.50	**Building Permit Issuance and Conditions**
110.502.55	**Sign Inspection and Responsibilities**
110.502.60	**Violations**
110.502.65	**Substitution Clause**
110.502.70	**Discontinued Billboard**

Section 110.502.00 Purpose. The purpose of this article, Article 502, Billboard Regulations, is to establish a comprehensive system for the regulation of the commercial use of billboards. It is intended that these regulations:

(a) Impose reasonable standards on the number, size, height and location of billboards and facilitate the removal or replacement of nonconforming signs in order to:

(1) Prevent and relieve needless distraction and clutter resulting from excessive and confusing sign displays;

(2) Safeguard and enhance property values; and

(3) Promote the public safety and general welfare.

(b) Promote the location of billboards in appropriate locations for the purposes of advertising the region's economy to visitors to the area and providing useful public service messages to residents of the County.

(c) Provide one of the tools essential to the preservation and enhancement of the environment, thereby protecting an important aspect of the economy of the County which is instrumental in attracting those who come to live, visit, vacation and trade while providing appropriate opportunities to local and national advertisers and public service organizations to present their message.

(d) Eliminate hazards to pedestrians and motorists brought about by distracting signs.

(e) Improve, enhance and preserve the appearance and other aesthetic qualities of the County while providing the opportunity to businesses and public service organizations to provide their message to visitors and residents.

[Amended by Ord. 1019, provisions eff. 6/5/98; Ord. 1152, provisions eff. 3/22/02; Ord.1288, provisions eff.3/24/06.]

Section 110.502.05 Definitions. As used in Sections 110.502.00 through 110.502.75, unless the context otherwise requires, the words and terms defined in this article have the meanings ascribed to them in each section.

Abandoned Sign. "Abandoned sign" means a sign which does not display a currently valid advertising message or has not been maintained in accordance with the provisions of this article for a period in excess of ninety (90) days following legal notice to the owner of the property and the owner of the advertising display. This definition shall also include any sign structure which no longer supports the sign for which it was designed.

Advertising Display. "Advertising display" means any arrangement of material or symbols erected, constructed, carved, painted, shaped or otherwise created for the purpose of advertising or promoting the interests of any person or other entity, located in view of the general public and visible from a public street. Advertising display includes signs, billboards, posters, graphic advertising messages, advertising copy, accessory signs and similar displays, the purpose of which is to sell entertainment, goods or services.

Area of a Sign. "Area of a sign" means the sum total of the geometric areas of the display surfaces which make up the total sign or advertising display. Necessary supports or uprights are excluded.

Building Official. "Building official" means the County building official of Washoe County and his/her duly authorized deputies.

Bus Shelter. "Bus shelter" means a structure that may be enclosed and may have one or more bus benches and that provides protection from the weather for riders of a public transportation system and which is installed and maintained by a public transportation operator.

Community Development Director. "Community Development Director" means the person appointed as the chief executive officer of the Washoe County Community Development Department and his/her duly authorized agents.

Copy. "Copy" means that portion of a sign or advertising display that is made up of language, letters, numbers or symbols that state a message.

Cut-out. "Cut-out" means that portion of a sign that is attached to a sign, but which is outside the rectangular or square frame of the sign.

Display Surface. "Display surface" means the area made available by the sign structure for the purpose of displaying the advertising message or display.

Elevated Roadway Structure. "Elevated roadway structure" means a traffic-carrying structure elevated over other streets, structures, railroad tracks or a natural physical feature.

Erect. "Erect" means to arrange, build, construct, attach, hang, paint, place, suspend, affix or otherwise establish an advertising display.

Height of Sign. "Height of sign" means the vertical distance measured from the adjacent street grade or upper surface of the nearest curb of a street or highway other than an elevated roadway, to the highest point of a sign or advertising display.

Illuminated Advertising Display. "Illuminated advertising display" means display illumination derived entirely from an external artificial source arranged so that no direct rays of light project into residences or streets.

Nonconforming Outdoor Advertising (Billboard) Structure. "Nonconforming outdoor advertising structure" means an outdoor advertising structure (billboard) which is constructed or erected in conformance with all applicable local ordinances or codes in effect on the date a building permit is issued for the outdoor advertising structure and which does not conform subsequently because of a change to the local ordinances or codes. The term does not include an outdoor advertising structure that is authorized by a special use permit, conditional use permit, variance, waiver, condition of zoning or other approval for the use of land if, when the special use permit, conditional use permit, variance, waiver, condition of zoning or other approval for the use of land was first approved, the special use permit, conditional use permit, variance, waiver, condition of zoning or other approval for the use of land was limited by a specific condition which allowed or required the governing body of the city or County to conduct a review of the structure.

Off-Premise Sign or Outdoor Advertising Structure (Billboard). "Off-premise sign or outdoor advertising structure" means any sign, display, billboard or other device that is designed, intended or used to advertise or inform readers about services or goods produced or sold on property other than the property upon which the sign, display, billboard or other devise is erected.

Permanent Sign. "Permanent sign" means any sign, permanently affixed at the site, which, from the nature and effect of its proposed composition, construction, message to be carried or its proposed placement, is intended for continuous display for a period of time greater than sixty (60) calendar days.

Premises. "Premises" means a parcel of property.

Public Transportation Operator. "Public transportation operator" means an operator of a bus system with fixed routes that is enabled by state statute to operate a public bus system.

Reconstruction. "Reconstruction" means the replacement of frame and support material of an existing sign with different material (e.g. replacement of wood material with metal material) and/or the changing of the support structure of an existing sign from one type of support system to a different support system (e.g. replacement of a lattice support with a monopole).

Repair. "Repair" means the replacement of frame and support material of an existing sign with the same material with no change in the support system of the existing sign.

Routine Maintenance. "Routine maintenance" means normal repair and upkeep of the structural integrity and appearance of a nonconforming outdoor advertising structure. The term does not include an increase in the size or height of the structure or any addition or enhancement to the structure that increases the visual effect of the structure or increases the impact of the use of the land in the area around the structure.

Sign. "Sign" means any arrangement of material or symbols erected, constructed, carved, painted, shaped or otherwise created for the purpose of advertising or promoting the interests of

any person, persons, firm, corporation or other entity by conveying an advertising message or attracting the attention of the public and which is located in view of the general public and visible from a traveled way. Sign includes advertising displays, billboards, posters, graphic advertising messages, advertising copy and similar displays, all parts of such device, including its structure and supports and also includes balloons, banners, pennants, flags, lights, reflectors, reflected lights, streamers or other devices which are used to attract the attention of the public, whether or not they convey a specific advertising message.

[Section 110.502.05 entitled "Applicability" deleted and Section 110.502.05 entitled "Definitions" added by Ord. 1019, provisions eff. 6/5/98. Amended by Ord. 1152, provisions eff. 3/22/02; Ord. 1186, provisions eff. 12/20/02; Ord.1288, provisions eff.3/24/06.]

Section 110.502.10 General Standards.

(a) Display Surface. Where an advertising display consists of individual letters, symbols or other such components, and where such components are without an integrated background definition or are not within a single circumscribed frame area, it shall be deemed circumscribed by a line frame and shall not exceed the square-foot limitation imposed by this article or by a retention permit or a special use permit issued pursuant to this article.

(b) Maintenance, Repair and Appearance. All advertising displays and advertising structures shall be maintained in a proper state of repair and preservation. Structures shall consist of minimum guy wire and iron or other structural elements necessary to conform to code. Display surfaces shall be neatly painted or posted.

[Amended by Ord. 889, provisions eff. 11/29/93. Section 110.502.10 entitled "Chapter 105" deleted and Section 110.502.10 entitled "General Standards" added by Ord. 1019, provisions eff. 6/5/98. Amended by Ord. 1152, provisions eff. 3/22/02.]

Section 110.502.15 Permits: General Requirements.

(a) Building Permit Required. Except as otherwise provided in Section 110.502.20, it is unlawful for any person to erect, enlarge, alter (except for normal maintenance or repair) or relocate within the County any advertising display or advertising structure without having obtained a building permit from the building official, except as provided in Section 110.502.23.

(b) Additional Information Required. An application for a building permit shall include in addition to any information required for the building permit application:

(1) Name, address and telephone number of the owner of the property, and a statement signed by the owner or authorized representative permitting the advertising display or advertising structure;

(2) Name, address and telephone number of the applicant (owner of the advertising display or structure);

(3) Name, address, telephone number and license number of the licensed contractor;

(4) A plot plan indicating the location of the building, structure, lot or parcel of property to which or upon which the advertising display is to be erected, including data showing building and property frontages; and

(5) Two (2) copies of a plan showing:

(i) The position of the advertising display or structure in relation to adjacent structures or buildings;

(ii) The design size and type of materials to be used;

(iii) The size and location of all on-premise signs within fifty (50) feet of either side of the proposed off-premise sign; and

(iv) The location of stakes identifying boundaries of the proposed sign.

(c) Structural Engineering. The Building and Safety Department may require structural engineering plans to ensure compliance with the Washoe County Building Code.

(d) Business License. Owners or applicants who are in the business of constructing advertising structures or leasing such structures for advertising purposes shall provide evidence that they have a valid business license from the licensing authority of the County.

[Added by Ord. 1019, provisions eff. 6/5/98. Amended by Ord. 1152, provisions eff. 3/22/02; Ord. 1186, provisions eff. 12/20/02.]

Section 110.502.20 Permit Issuance and Standards for New Signs. Each of the following standards must be complied with as part of the approved plans for an approved building permit:

(a) Size and Height of Billboard; Number of Faces. A billboard shall not exceed the following height and size requirements, or the number of faces:

(1) A billboard shall not exceed thirty-five (35) feet in height above the grade of the road to which it is oriented and may not exceed fifty (50) feet in height above the foundation grade of the sign.

(2) A billboard shall not exceed six hundred seventy-two (672) square feet in size, except as provided in this section.

(3) Each face of a billboard may have a cut-out attached to the face of the sign, the size of the cut-out may not exceed ten (10) percent of the rectangular or square face of the sign to which it is attached.

(4) A billboard may not contain more than two (2) sides on which a message is attached and one (1) side may not be angled from the other side by more than twenty (20) degrees as measured from the back of the structure supporting the side.

(5) A billboard may not be stacked upon another off-premise or on-premise sign.

(b) Spacing Requirements. A billboard shall conform to the following spacing standards:

(1) Spacing Between Billboards. The distance between billboards shall conform to the following:

(i) A billboard shall not be closer than one thousand (1,000) feet to another conforming or nonconforming billboard located on the same side of the road, street or highway.

(ii) A billboard shall not be closer than one thousand (1,000) feet to another conforming or nonconforming billboard located on an intersecting street and when the signs are on the same side of the street where the intersection of the two (2) streets occurs.

(iii) For the purposes of measuring the distance between billboards, the measurement shall be parallel to the streets on which the signs are located.

(iv) No more than two (2) billboards may exist at the intersection of streets and the signs shall be located diagonally opposite each other at the intersection of streets.

(2) Spacing Between Billboards and On-Premise Signs. A billboard shall not be closer than fifty (50) feet to an existing free-standing sign regulated by Sections 110.504.40 through 110.504.70.

(3) Spacing from Residential Regulatory Zones. A billboard shall not be closer than five hundred (500) feet to an established residential regulatory zone that is Rural, Suburban, Urban or the General Rural Agricultural (GRA) or General Rural (GR) Regulatory Zones.

(4) Spacing from Streams and Drainages; Truckee River. A billboard shall conform to the following spacing requirements from streams, drainages and the Truckee River:

(i) A billboard shall not be located within any stream or drainage channel where the sign or advertising display might be deluged and swept under any structure or against any supports of any road, street or highway structure.

(ii) A billboard shall not be located within three hundred (300) feet of the centerline of the Truckee River or within three hundred (300) feet of the outer boundary of any area designated as Truckee River Greenbelt or open space adjacent to the Truckee River.

(5) Spacing from Public, Semi-Public Buildings and Spaces. A billboard shall not be located at any location which fronts on any street within two hundred (200) feet of any property which is used for a public park, public school, church, courthouse, building used for County services, or public museum which fronts on the same street.

(c) Location Requirements. A billboard shall conform to the following location requirements:

(1) Permitted Roadway Segments. A billboard shall only be located adjacent to and be visible from the following roads and portions of roads:

(i) Gerlach-Nixon Highway (SR 447);

(ii) Longley Lane;

(iii) McCarran Boulevard, except for the segment between Interstate 80 west of Reno and South Virginia Street;

(iv) Sullivan Lane;

(v) That portion of West Fourth Street (SR 647) east of the intersection with Intersection 80;

(vi) That portion of U.S. 395 and Interstate 580 located south of the intersection with Red Rock Road and north of the northern most intersection of U.S. 395/Interstate 580 and South Virginia Street located at Nevada Department of Transportation structure I1799 at mile post IR 580 - WA 21.64;

(vii) That portion of North Virginia Street located south of the intersection with Stead Boulevard and that portion of South Virginia Street north of the intersection with the Mt. Rose Highway (SR 431);

(viii) That portion of Interstate 80 from mile post IR 080 - WA-1.9E to IR 080 - WA-2.6W; and

(ix) That portion of Interstate 80 from the intersection with Mae Anne Drive to the Lyon County line.

(2) Permitted Regulatory Zones. A billboard shall only be located in the following regulatory zones: General Commercial (GC), Tourist Commercial (TC) and Industrial (I) as established pursuant to this article.

(d) Aesthetic Requirements. A billboard shall conform to the following aesthetic standards:

(1) Lighting of the sign shall be low-level and indirect, no strobe lighting or lighting that would impair the vision of a driver shall be permitted;

(2) Earth-tone colors shall be used to paint the support(s) of the structure and the frame around the sign;

(3) The minimum number of supports shall be used to provide support of the sign frame;

(4) No signs made of canvas shall be permitted;

(5) No sign may have streamers, balloons, pennants, banners, or wind driven devices as part of the sign or attached to the sign;

(6) No sign may emit a noise via an artificial device;

(7) No sign may emit smoke, fire or odor;

(8) No sign or portion of a sign may simulate the appearance of an official sign; and

(9) No sign may emit blinking lights that simulate a warming or stop light.

(e) No Variances to Standards. Except as permitted in Section 110.502.45, no variance application shall be accepted to alter the standards of this article.

(f) Prohibition on the Erection of New Signs. Until all nonconforming billboards are removed, no new billboard may be erected pursuant to this section.

[Added by Ord. 1019, provisions eff. 6/5/98. Amended by Ord. 1152, provisions eff. 3/22/02, Ord. 1288, provisions eff. 3/24/06; Ord. 1475, provisions eff. 1/12/12.]

Section 110.502.23 Bus Shelters.

(a) Off-Premise Advertising Display Permitted. Off-premise advertising copy may be permitted on any bus shelter that is installed and maintained by a public transportation operator. No building permit shall be required for the installation of a bus shelter installed by a public transportation operator.

(b) Limitation on Permitted Advertising Display. The following shall apply to the area that may be used for off-premise advertising display:

(1) Advertising copy shall only be permitted on bus shelters installed by a public transportation operator.

(2) Advertising copy shall not obstruct the ability of a bus operator to view riders who wish to board a bus, nor shall advertising copy obstruct riders from safely exiting a bus.

(3) Advertising copy may not exceed a total of sixty-four (64) square feet at each bus shelter location.

(4) Advertising copy on a bus shelter may not exceed the size of the panel on which it is affixed and no one panel may have advertising copy that exceeds thirty-two (32) square feet in size.

(c) Limitation of Off-Premise Signs. The number of bus shelters installed by a public transportation operator that may have advertising copy shall not count toward the number of off-premise signs permitted by Section 110.502.40(a).

(d) Installation of Bus Shelters. The installation of bus shelters by a public transportation operator that may contain advertising shall not be prohibited pursuant to Section 110.502.20(f).

[Added by Ord. 1186, provisions eff. 12/20/02.]

Section 110.502.25 Bringing a Nonconforming Billboard into Conformance. To bring a nonconforming billboard into conformance with the provisions of this article, the sign owner shall satisfy the permit issuance and standards for new billboards as enumerated in Section 110.502.20.

[Added by Ord. 1019, provisions eff. 6/5/98; Ord. 1288, provisions eff. 3/24/06.]

Section 110.502.30 Continued Use of Nonconforming Billboards. An advertising display which becomes nonconforming as the result of the adoption of this article may be continued, repaired or reconstructed pursuant to the following requirements:

(a) Alteration of Nonconforming Sign. A nonconforming sign shall not be altered in its location, size or height, except as provided in paragraph (b) through (e) of this section.

(b) Damage of Nonconforming Sign by Natural Causes. A nonconforming sign damaged by wind or other natural causes to an extent less than fifty-one (51) percent of its replacement value, as determined by a member of the American Institute of Real Estate Appraisers selected by the building official, may be repaired or reconstructed. If the building official determines that an appraisal is necessary to satisfy the requirements of this section, he/she shall notify the owner of the sign who shall give him/her written authorization to hire an appraiser and acknowledge owner's responsibility to pay all fees incurred as a result thereof. No permit for repair or reconstruction of the damaged sign shall be issued until the building official is presented with satisfactory evidence that the appraisal fees have been paid.

(c) Damage of Nonconforming Sign by Vandalism. A nonconforming display which is damaged or destroyed as a result of vandalism or other malicious act may be repaired or reconstructed. Upon request of the building official, the owner of the sign shall provide evidence that a report to the Sheriff was made regarding the alleged vandalism.

(d) Routine Maintenance of Nonconforming Sign. Routine maintenance of a nonconforming sign may occur only after notification of the Building and Safety Department that said repairs are being undertaken and that said maintenance meets the definition of routine maintenance as defined in this article.

(e) Reconstruction of Nonconforming Sign. A nonconforming sign may be reconstructed providing the following occurs:

(1) Prior to any reconstruction work, the sign owner provides to the building official a complete set of as-built plans detailing the size, height, location of the current nonconforming sign and materials of which the current off-premise sign is constructed; type of material to be used in the reconstruction of the sign; and the anticipated dates of reconstruction.

(2) No change in the location of the sign, no change in the height of the sign (except to reduce its height) and no change in the size of the sign (except to reduce its size).

(3) A notarized statement from the sign owner that no increase in value of the sign will be claimed in any future proceedings due to the reconstruction of the sign.

(4) A notarized statement from the sign owner acknowledging that reconstruction of the sign does not affect the termination of the right to use the nonconforming sign as enumerated in Section 110.502.35.

(f) Building Permit Required for Reconstruction, Notification Required for Repair or Routine Maintenance. A building permit shall be applied for and issued prior to any reconstruction of a nonconforming sign. No building permit shall be required for repair or routine maintenance of a nonconforming sign, but prior to any repair work or routine maintenance occurring, the sign owner shall notify the building official of his intent to repair or perform routine maintenance on the nonconforming sign and shall advise the building official of the extent of the repairs or maintenance.

[Added by Ord. 1019, provisions eff. 6/5/98. Amended by Ord. 1152, provisions eff. 3/22/02; Ord. 1288, provisions eff. 3/24/06.]

Section 110.502.35 Termination of Right to Use Nonconforming Billboard.

(a) Cessation of Right to Maintain Abandoned Sign. The right of a person to maintain an abandoned, nonconforming sign shall terminate following his/her receipt of notification that the Building and Safety Department or succeeding agency has deemed the sign abandoned.

(b) Damage of Nonconforming Sign by Natural Causes. A nonconforming sign damaged by wind or other natural causes to an extent greater than fifty (50) percent of its replacement value, as determined by a member of the American Institute of Real Estate Appraisers selected by the building official, shall not be reestablished. If the building official determines that an appraisal is necessary to satisfy the requirements of this section, he/she shall notify the owner of the sign who shall give him/her written authorization to hire an appraiser and acknowledge owner's responsibility to pay all fees incurred as a result thereof. No permit for reconstruction of the damaged sign shall be issued until the building official is presented with satisfactory evidence that the appraisal fees have been paid.

(c) Removal Due to Approval of Development Application. A nonconforming sign may be ordered removed if the parcel on which the sign is located is the subject of a building permit application and after a public hearing is conducted.

(d) Public Hearing Required. A public hearing before the Planning Commission shall be noticed and conducted pursuant to the provisions for a public hearing for a special use permit (Refer to Article 810, Special Use Permits) before a nonconforming sign may be ordered removed pursuant to subsection (c) above. When determining that a nonconforming sign must be removed, the Planning Commission shall find that the continuation of the location of the nonconforming sign is not compatible with the proposed development for the property as submitted under an application enumerated in subsection (c) above.

(e) Responsibility for Removal. Responsibility for removal of an abandoned, nonconforming sign rests with the owner of the sign or the owner of the property upon which the sign is constructed.

[Added by Ord. 1019, provisions eff. 6/5/98. Amended by Ord. 1152, provisions eff. 3/22/02; Ord. 1288, provisions eff. 3/24/06.]

Section 110.502.40 Total Number of Billboards Permitted in Unincorporated Portion of Washoe County.

(a) Limitation to Number of Permitted Signs. Notwithstanding the total number of conforming locations that may be permitted for new signs as provided in Section 110.502.20, Permit Issuance and Standards for New Signs, the total number of billboards existing in the unincorporated portion of Washoe County shall not exceed one hundred nine (109) at any one time.

(b) Limitation Based on Inventory of Existing Signs. The total number of permitted billboards enumerated in paragraph (a) of this section is determined by an inventory completed on January 31, 2002 of all existing conforming and nonconforming signs located in the unincorporated portion of Washoe County and confirmed by the Board of County Commissioners on December 10, 2002, the date of an amendment to this article.

(c) Adjustment of Limitation. The total number of permitted billboards enumerated in paragraph (a) of this section shall be reduced each time by the number of off-premise signs and permitted billboard locations that are incorporated within the corporate boundaries of the City of Reno or City of Sparks.

(d) No Entitlement. Notwithstanding the total number of permitted signs enumerated in paragraph (a) of this section, no entitlement to the maximum number of signs enumerated in this section is extended to any current or future owner of an off-premise sign through the provisions of this section. The retention of the location of current nonconforming signs and the provision of locations for new, permitted signs is strictly governed by the location standards enumerated in this article.

[Added by Ord. 1019, provisions eff. 6/5/98. Amended by Ord. 1152, provisions eff. 3/22/02; Ord. 1186, provisions eff. 12/20/02; Ord. 1288, provisions eff. 3/24/06.]

Section 110.502.45 Community Development Director's and County Building Official's Powers; Right of Entry.

(a) Authority. The building official and the Director of Community Development and his/her agents are authorized and directed to enforce all the provisions of this article. The Director of Community Development may, in his/her sole discretion, permit variations in spacing and height requirements if undue hardship is shown. No variation shall exceed ten (10) percent of spacing and height limitations imposed by this article.

(b) Right of Entry. Whenever necessary to make an inspection to enforce any of the provisions of this article, or whenever the building official or Director of Community Development or his/her agents have reasonable cause to believe that there exists a condition which makes a sign unsafe, he/she may enter the premises upon which such sign is located at all reasonable times to inspect the sign or to perform any duty imposed by this article, provided that:

(1) If the premises upon which the sign is located are occupied, he/she shall first present proper credentials and demand entry; and

(2) If the premises are unoccupied, he/she shall first make a reasonable effort to locate the owner or other persons having charge or control of the premises and demand entry.

If such entry is refused, the building official or Director of Community Development or his/her agents may pursue every remedy provided by law to secure entry.

(c) Failure to Permit Entry. Any owner or occupant or any other person having charge, care or control of any building or premises who fails or neglects, after proper demand is made as provided by this article, promptly to permit entry therein by the building official or Director of Community Development or his/her agents for the purpose of inspection and examination pursuant to this section shall have violated this article.

[Added by Ord. 1019, provisions eff. 6/5/98. Amended by Ord. 1152, provisions eff. 3/22/02.]

Section 110.502.50 Building Permit Issuance and Conditions.

(a) Permit Issuance. The application, plans and specifications, and other data filed by an applicant for a building permit shall be reviewed by the Department of Community Development. Such plans may be reviewed by other departments of this jurisdiction to verify compliance with any applicable laws under their jurisdiction. If the Department of Community Development finds that the work described in an application for a building permit and the plans, specifications and other data filed therewith conform to the requirements of this article and that the fees specified in this section have been paid, a building permit shall be issued to the applicant within twenty (20) days of receipt of the building permit application. An applicant shall be advised in writing within twenty (20) days of receipt of the building permit application of any deficiencies of information submitted with the application and what would be required to cure those deficiencies. The applicant may then resubmit the application and will receive a decision within twenty (20) days. An applicant shall have six (6) months from the date of issuance of the building permit to commence work pursuant to the building permit, or all approvals are null and void. Once a building permit has been issued and exercised, all work shall be done in accordance with the approved plans unless the building official and the Community Development Director have given authorization for any changes or alterations.

(b) Plan-Check Fee. Every person who applies for a building permit under the provisions of this article shall submit to the Building and Safety Department with his/her application a plan-check fee established by the Board of County Commissioners.

(c) Permit Number; Address; Owner. On granting a permit for a billboard, the building official shall assign a permit number and address which shall be painted on every sign erected pursuant to the permit. The sign shall also identify the owner of the sign.

(d) Validity of Permit. The issuance or granting of a permit or approval of plans and specifications shall not be construed to be a permit for, or an approval of, any violation of any of the provisions of this article or any other law or ordinance. A permit presuming to give authority to violate or cancel the provisions of this article or any other law shall not be valid except to the extent the work of use which it authorizes is lawful.

(e) Suspension or Revocation. The building official may, upon service of a written notice, suspend or revoke a permit issued pursuant to the provisions of this article wherever the permit is issued:

(1) On the basis of incorrect information supplied by the applicant; or

(2) In violation of any state statute, any provision of this article or any other ordinance or regulation.

(f) Stop Work Order. Whenever any advertising display or structure is being erected or maintained contrary to the provisions of this article, the building official may order the work stopped by serving the permittee or owner of the property or by posting a notice on the work being done. The owner or person responsible for the performance of such work shall promptly cease performing any work on the advertising display or structure until the building official gives him authority to proceed.

[Added by Ord. 1019, provisions eff. 6/5/98. Amended by Ord. 1152, provisions eff. 3/22/02; Ord. 1288, provisions eff. 3/24/06.]

Section 110.502.55 Sign Inspection and Responsibilities.

(a) Inspection. Every advertising display or advertising structure erected in the County is subject to inspection by the building official or Community Development Director to assure compliance with the provisions of this article.

(b) Responsibility. The owner of the advertising display or advertising structure is responsible for its proper construction, maintenance, repair and compliance with the provisions of this article.

[Added by Ord. 1019, provisions eff. 6/5/98. Amended by Ord. 1152, provisions eff. 3/22/02.]

Section 110.502.60 Violations.

(a) Procedure for Violations. Any advertising display or structure erected or maintained, or any use of property contrary to the provisions of this article, is unlawful and a public nuisance. The following procedure applies to enforcement of the provisions of this article:

(1) In the event of a violation of this article, the building official or Director of Community Development shall deliver to the person or persons in violation of this article a "Notice of Violation (Order to Comply and Abatement Order)" ordering the persons to comply with the provisions of this article within ten (10) days of receipt of the notice.

(2) Upon failure of the persons in violation to comply, the building official or Director of Community Development may issue to the persons in violation a citation to appear before any justice's court within the County and may refer a copy of the citation to the District Attorney for commencement of an action or actions for the abatement, removal and enjoinment of such violation as a public nuisance pursuant to Chapter 125 of the Washoe County Code, and the institution of a criminal action in the manner provided by law.

(b) Remedies. All remedies provided for in this article are cumulative and not exclusive. The conviction and punishment of any person under this article do not relieve such person from the responsibilities of correcting conditions or removing prohibited sign displays and structures that are in violation of this article.

(c) Penalties. Any person violating any of the provisions of this article or any applicable provisions of the Uniform Building Code is guilty of a separate offense for each day or a portion thereof during which a violation of any of the provisions of this article is committed, continued or permitted, and upon conviction for any such violation shall be punished by a fine of not more than one thousand dollars ($1,000), or by imprisonment for not more than six (6) months, or by both fine and imprisonment.

[Added by Ord. 1019, provisions eff. 6/5/98. Amended by Ord. 1152, provisions eff. 3/22/02.]

Section 110.502.65 Substitution Clause. Notwithstanding any other provision of this article to the contrary, any noncommercial message may be substituted for a commercial message on any billboard permitted by this article, and any other commercial message may be substituted for any noncommercial message on any billboard permitted by this article.

[Added by Ord. 1152, provisions eff. 3/22/02; Ord. 1288, provisions eff. 3/24/06.]

Section 110.502.70 Discontinued Billboards.

(a) Removal of Discontinued Billboards. Any billboard or billboard structure which has been discontinued for a period of six (6) months shall be removed or restored to use within thirty (30) days after a notice that the billboard has been discontinued is issued to the owner of the sign. Notice shall be given by the Director of Community Development using certified mail. The Director of Community Development may allow a discontinued billboard or billboard structure to remain in place; provided that the billboard or billboard structure is maintained in good condition, and that there is a reasonable possibility that the billboard can be restored to use within a one (1) year period.

(b) Criteria for Establishing That a Billboard Has Been Discontinued. A billboard or billboard structure shall be considered discontinued when any of the following occurs:

(1) Any copy thereon is out of date.

(2) The structure no longer supports a billboard or the billboard no longer contains an advertising display.

(3) The billboard structure or advertising display is visibly damaged or partially missing.

[Added by Ord. 1288, provisions eff. 3/24/06.]

[Section 110.502.30 entitled "Exempt Advertising Displays", Section 110.502.35 entitled "Prohibited Signs" and Section 110.502.60 entitled "Appeals Procedure" added by Ord. 1019, provisions eff. 6/5/98 and repealed by Ord. 1152, provisions eff. 3/22/02.]

Article 504
SIGN REGULATIONS

Sections:

110.504.00	**Title; Effect; Construction**
110.504.05	**Purpose**
110.504.10	**Definitions**
110.504.15	**General Standards**
110.504.20	**Permits and Enforcement**
110.504.25	**Regulated Signs; Variance**
110.504.30	**Exempted Signs**
110.504.35	**Prohibited Signs**
110.504.40	**Signs Requiring a Special Use Permit**
110.504.45	**Special Standards by Type of Sign**
110.504.50	**Special Standards by Zone**
110.504.55	**On-Premise Sign Credits; Types; Computation**
110.504.60	**Nonconforming Signs**
110.504.65	**Abandoned Signs**
110.504.70	**Signs on Public and Utility Property**

Section 110.504.00 Title; Effect; Construction. This article supplements other articles of this division and supersedes any conflicting articles or sections. These sections shall be liberally construed to effect the purpose of reducing the number and size of signs, and to effect the purpose of advancing the declaration of Section 110.504.05, Purpose. These sections may not be construed or applied in such a way that would give a preference or greater degree of protection to a sign conveying a commercial message than is given to a sign similarly situated and constructed conveying a noncommercial message. These sections must be construed to apply to all signs irrespective of the commercial or noncommercial character of the content, except that specific types of commercial signs are to be regulated more strictly. Any ambiguity or question shall be resolved by allowing a noncommercial sign the same benefits, exemptions and other preferences that may be given to a commercial sign similarly constructed and situated, or by imposing on such commercial sign the same restriction imposed on the noncommercial sign similarly constructed and situated. These sections apply to existing signs and to proposed signs. Proposed signs for which construction has not lawfully begun, but for which an application has been made or for which a permit has been issued, must conform to these sections.

[Added by Ord. 1035, provisions eff. 8/28/98.]

Section 110.504.05 Purpose.

(a) The purpose of this article, Article 504, Sign Regulations, is to establish a comprehensive control of the erection and relocation of signs, except for those signs regulated pursuant to Article 502, Billboards. It is intended that these regulations:

(1) Impose standards on the number, size, height and location of signs other than billboards and facilitate the removal or replacement of nonessential or nonconforming signs in order to:

(i) Prevent and relieve needless distraction and clutter resulting from excessive and confusing sign displays;

(ii) Safeguard and enhance property values; and

(iii) Promote the public safety and general welfare.

(2) Provide one of the tools essential to the preservation and enhancement of the environment, thereby protecting an important aspect of the economy of the County which is instrumental in attracting those who come to live, visit, vacation and trade.

(3) Eliminate hazards to pedestrians and motorists brought about by distracting signs.

(4) Improve, enhance and preserve the appearance and other aesthetic qualities of the County.

(b) The types of signs for which a special use permit is required have a potential substantially greater than other types of signs for creating needless distraction and clutter, confusion and hazards, and for impairing and destroying property values and the appearance and aesthetic qualities of the area, and for adversely affecting the environment.

[Added by Ord. 1035, provisions eff. 8/28/98. Amended by Ord. 1288, provisions eff. 3/24/06.]

Section 110.504.10 Definitions. As used in Sections 110.504.00 through 110.504.70, unless the context otherwise requires, the words and terms defined in this article have the meanings ascribed to them in each section.

Abandoned Sign. "Abandoned sign" means a sign which does not display a currently valid advertising message or which has not been maintained in good repair. This definition shall also include any sign structure which no longer supports the sign for which it was designed.

Administrator. "Administrator" means the Director of Community Development of Washoe County or his authorized representative.

Advertising Display. "Advertising display" means the copy, symbols, logotype or graphics on a sign which convey the advertising message.

Advertising Message. "Advertising message" means any copy, symbol, logotype or graphics which identify, promote or advertise any product, service, business, institution or interest of any person.

Allowable Sign Area. "Allowable sign area" means the total sign area permitted under this article for any site or business.

Amortization. "Amortization" means the elimination of nonconforming signs over a period of time intended to allow the owner to realize the value of his investment in the sign.

Animated Sign. "Animated sign" means a sign which uses lights or mechanical devices to simulate or create the effect of motion in the advertising display.

Architectural Graphic. "Architectural graphic" means a painted design, mural, relief, mosaic or similar feature which is incorporated into the architectural design of a building and conveys no advertising message.

Area Identification Sign. "Area identification sign" means a permanent, decorative sign used to identify a neighborhood, subdivision, commercial or office complex, industrial district or similar distinct area of the community.

Building Frontage. "Building frontage" means the length of the face or wall of a completely enclosed building which fronts directly on a public street or other public area.

Business Frontage. "Business frontage" means the length of building frontage occupied by an individual building occupant. An occupant may have more than one (1) business frontage if it occupies building frontage facing on two (2) or more streets or public areas.

Civic Display. "Civic display" means a temporary display of banners, balloons, flags, lights or similar decorations erected on a public street or other public property in connection with a holiday, civic event or celebration.

Commercial Sign. "Commercial sign" means, when describing the content of a sign, a sign advertising, identifying, directing attention to, or otherwise relating to commerce and to property, goods or services for sale, lease, exchange or any other transaction where value is given or received by any party to the transaction. Noncommercial sign means, when describing the content of a sign, a sign not conforming to the definition of a commercial sign.

Community Director Sign. "Community director sign" means a sign, or a group of signs designed as a single display, which gives information about local churches or civic organizations.

Directional Sign. "Directional sign" means a permanent sign which directs the flow of traffic or pedestrians on private property and which contains no advertising message.

Directory Sign. "Directory sign" means a sign, or a group of signs designed as a single display, which gives information about the location of businesses, buildings or addresses within a residential, office, commercial or industrial complex.

Flashing Sign. "Flashing sign" means a sign which uses blinking, flashing or intermittent illumination or light reflectors, either direct, indirect or internal.

Frontage. See "building frontage", "business frontage" and "site frontage".

Freestanding Sign. "Freestanding sign" means a sign which is supported by its own structure apart from a building, but which is not regulated as a billboard.

Fuel Price Sign. "Fuel price sign" means a sign which displays prices of various types of gasoline or diesel fuel available at a service station. A fuel price sign may include a brand name if it does not occupy more than one-third (1/3) of the area of the advertising display.

Gaming. "Gaming" means that the occupant of the premises holds and exercises a valid nonrestricted gaming license issued by the State of Nevada, that the occupant actually conducts all gaming activities allowed by the license, and that the occupant holds a valid gaming license and business license issued by the County.

Height. "Height" means the vertical distance from the topmost part of a sign to the grade of the nearest building or street other than an elevated street.

Holiday Decoration. "Holiday decoration" means any display commonly associated with a local, state, national or religious holiday, and which is not left in place for more than forty-five (45) days during any single observance.

Indirect Illumination. "Indirect illumination" means illumination which is cast on a sign from a source outside the sign with the source of the light shielded from direct view.

Indoor Poster. "Indoor poster" means a temporary sign or poster displayed inside a window for a period not to exceed thirty (30) days to provide information about a specific product, price, event or activity.

Inflatable Sign. "Inflatable sign" means any device which is supported by air pressure or inflated with air or gas which is used to attract the attention of the public, whether or not it displays any specific advertising message.

Internal Illumination. "Internal illumination" means illumination produced by a light source contained within a sign and not directly visible from outside.

Kiosk. "Kiosk" means a structure not exceeding six (6) feet in any horizontal dimension or twelve (12) feet in vertical dimension which is used to provide surfaces for the posting of notices.

Logo. "Logo" means a graphic symbol representing an activity, use or business, or supporter of a non-profit organization or educational institution. Permitted logo types shall be symbols commonly used, including registered trademarks, and may include lettering in addition to graphic designs.

Mobile Sign. "Mobile sign" means a sign supported by a sign structure that is mounted on wheels, skids or other device designed to make the structure conveniently movable or portable. Mobile signs include vehicles, trailers and frameworks not structurally attached to the ground or a building.

Moving Sign. "Moving sign" means any sign which includes visible moving or rotating parts or beam of light.

Neighborhood Bulletin Board. "Neighborhood bulletin board" means any surface outside a building provided specifically to allow the posting of notices.

Nonconforming Sign. "Nonconforming sign" means any sign which was lawfully erected prior to the adoption of this article, or amendments thereto, which would not be permitted under the current provisions of this article. This definition shall include signs which were erected without a special use permit and which would require a special use permit under the current provisions of this article.

Official Sign. "Official sign" means any sign erected by or at the direction of a governmental agency.

Off-Premise Directional Sign. "Off-premise directional sign" means any sign which directs the public to a building, business, institution or activity not located on the same site as the sign. This definition does not include any sign which displays an advertising message other than the name, phone number and address of the building, business, institution or activity.

Off-Premise Sign (Billboard). "Off-premise sign" (billboard) means any sign which identifies, advertises or directs attention to a business, activity, product, service or interest of any person

not located on the premises where the sign is located and that is regulated by Article 502, Billboards.

On-Premise Sign. "On-premise sign" means any sign which identifies, advertises or directs attention to a business, activity, product, service or interest of any person located on the premises where the sign is located.

Permanent Sign. "Permanent sign" means any sign which is designed, constructed and affixed at the site in such a manner that it cannot be conveniently moved from place to place.

Person. "Person" means a natural person or any organization, association or entity having an existence recognized by law.

Portable Sign. "Portable sign" means any sign which is designed and constructed in such a manner that it can conveniently be moved from place to place. This definition shall include cardboard, paper, fabric, canvas and plastic banners and flags.

Premises. "Premises" means a single parcel of land.

Projecting Sign. "Projecting sign" means a sign which is supported by a decorative bracket or hanger and extends at right angles from the face of a building. This definition shall also include any sign which, because of its shape or thickness, extends more than twelve (12) inches from the face of a building when mounted flat against the face of the building, but shall not include a marquee which is designed as an integral part of a building.

Project Sale Sign. "Project sale sign" means a sign which is erected for the purpose of promoting the sale or lease of property in a residential, office, commercial or industrial project on the site where the sign is located, and which is under construction or has been substantially complete for less than one (1) year.

Real Estate Sign. "Real estate sign" means a sign offering for sale, rent or lease the real property on which it is located.

Roof. "Roof" means a horizontal or sloping surface of a building which serves as a cover for the building or its entry, portico or other appurtenances. This definition includes any part of a building which resembles a roof in form or function.

Roof Sign. "Roof sign" means a sign painted on, supported by or attached to the roof or roof structure of a building. This definition does not include a sign attached flat against the wall of a penthouse, or other integral part of a building, which projects above the main roof.

Sign. "Sign" means a design or device displayed to the public for the purpose of identifying, advertising or promoting the interests of any person, persons, firm, corporation or other entity by conveying an advertising message or attracting the attention of the public. This definition includes all parts of such device, including its structure and supports and also includes balloons, banners, pennants, flags, lights, reflectors, reflected lights, streamers or other devices which are used to attract the attention of the public, whether or not they convey a specific advertising message.

Sign Structure. "Sign structure" means those parts of a sign designed to support it in place.

Site. "Site" means a lot or parcel, or contiguous lots or parcels of land on which a building or complex of buildings is located.

Site Frontage. "Site frontage" means the linear dimension of a site abutting on a public or private street right-of-way.

Supporter. "Supporter" means an individual, institution, company or organization that provides assistance to a non-profit organization or educational institution in the furtherance of that organization's/institution's primary mission. Assistance may be, but not limited to, funding, equipment and/or volunteer staff.

Suspended Sign. "Suspended sign" means a sign supported from, located below, and completely covered by a building soffit or permanent canopy.

Temporary Sign. "Temporary sign" means a sign made of paper, cardboard, cloth, plastic or similar material having limited durability if exposed to the elements; a sign, irrespective of its durability, intended for display for less than one hundred (100) days or only until the scheduled event it advertises or relates to has happened. Temporary signs do not include signs carried by a natural person, or changing copy on permanent signs lawfully erected and maintained.

Time and Temperature Sign. "Time and temperature sign" means a sign which displays only the current time, temperature, and/or news of current events and carries no advertising message. A time and temperature sign shall not be considered a flashing or animated sign.

Wall Sign. "Wall sign" means a sign which is painted on, supported by or attached to a wall or other vertical surface of a building.

Wind Sign. "Wind sign" means any sign, part of a sign or series of signs, designed or erected in such a manner as to move when subjected to wind pressure. Wind sign does not include "suspended signs".

[Added by Ord. 1035, provisions eff. 8/28/98. Amended by Ord. 1213, provisions eff. 9/19/03; Ord.1288, provisions eff. 3/24/06.]

Section 110.504.15 General Standards.

(a) Allowable Sign Area. Where the allowable sign area is a function of business frontage, no more than two (2) business frontages may be counted in calculating the allowable area for any building occupant.

(b) Sign Area Computation.

(1) Except for signs covered by Sections 110.504.25 through 110.504.40, the allowable sign area shall apply to the maximum geometric area of all sign faces visible from any one (1) point at eye level. Where an on-premise sign consists of individual letters, numbers or symbols, painted on or attached directly to a building, which are without an integrated background and are not enclosed in a frame or cabinet, the area of the display shall be the average height of the display times the average width. If such a display consists of more than one (1) line of component, the area of each line or component may be calculated separately. Where a display is enclosed in a frame or cabinet, or has an integrated background, the entire area within the frame, cabinet or background must be included.

(2) Where both on-premise signs and billboards are located on the same site, the allowable on-premise sign area shall not be reduced by the amount of billboard sign area.

(c) Number of Signs. The number of signs located on any business frontage shall not exceed two (2), exclusive of freestanding signs and suspended signs. Except in the Tourist Commercial (TC) Regulatory Zone and General Commercial (GC) Regulatory Zone that has gaming, the number of signs visible from any one (1) point at eye level shall not exceed four (4), exclusive of freestanding signs and suspended signs, for any single business or building occupant. In the Tourist Commercial (TC) Regulatory Zone and General Commercial (GC) Regulatory Zone that has gaming, the number of signs visible from any one (1) point at eye level shall not exceed six (6). Any advertising display contained within a single frame, cabinet or integrated background shall count as one (1) sign. If a display is not so contained, a single message or business name shall be counted as one (1) sign. A business name combined with a brief slogan may be counted as one (1) sign if the elements are visually integrated. Multiple signs on a single freestanding structure are allowed if the other requirements of paragraph (b) and this paragraph are satisfied; provided, that all signs supported by a single structure are visually compatible with one another.

(d) Freestanding Signs.

(1) A special use permit shall be required for any freestanding sign structure greater than six (6) feet in height on a site less than one (1) acre in size, and for any freestanding sign structure in excess of one (1) for each nine (9) acres of site area or fraction thereof. A special use permit is required for any freestanding sign, irrespective of the size of the premises, if the sign is greater than twenty (20) feet in height.

(2) The number and height of on-premises freestanding signs may be increased by sign credits without a special use permit, even if a special use permit, if applied for, is denied, provided that the height may not exceed ten (10) percent of the maximum heights for the applicable zone.

(e) Maintenance, Repair and Appearance. All signs shall be maintained in good repair and shall be neat in appearance. Any sign which is determined by the administrator to be unsafe or unsightly because of bent, broken or missing parts or poor maintenance generally may be declared a public nuisance.

(f) Location of Signs: Signs located on private property shall not extend across property lines into adjacent property or public rights-of-way. Signs may be located within, or project into, setbacks, except that no sign may be located in a manner that would create a hazard for traffic or pedestrians. A freestanding sign may not be located less than fifty (50) feet from another freestanding sign, whether on or off the premises, except that a new on-premise sign may be located within fifty (50) feet of an existing billboard if the billboard is subject to removal under the terms of a scenic easement recorded in accordance with Section 110.504.55, Sign Credits; Types; Computation.

(g) Wall Signs. Wall signs may not extend above or beyond the wall or surface to which they are attached and may not project more than one (1) foot from the wall.

(h) Roof Signs. Roof signs may not exceed four (4) feet in vertical dimension, may not be mounted on roofs having a pitch of less than 3 in 12, may not extend above the upper edge of the roof, below the lower edge of the roof, or beyond any other terminating edge of the roof. Roof signs must be constructed separately from the roof surface, must be mounted perpendicular to level grade and parallel to the nearest horizontal roof line, and must have all supports enclosed or otherwise made not visible from a public street or other public area.

(i) Projecting Signs. Projecting signs are allowed subject to the following conditions:

(1) The sign may not extend above the wall or other surface to which it is attached.

(2) The sign may not be attached to or located above a roof and must be attached perpendicular to a vertical surface.

(j) Freestanding Off-Premise Signs. A freestanding sign shall be permitted and regulated as an on-premise sign if the premises being advertised abuts and is under the same ownership as the premises where the sign is located and if the premises where the sign is located and all connection premises are legal parcels on which a structure other than a sign can be built or occupied.

[Added by Ord. 1035, provisions eff. 8/28/98. Amended by Ord.1288, provisions eff. 3/24/06.]

Section 110.504.20 Permits and Enforcement.

(a) Permit Required. Except as otherwise provided in this article, it is unlawful for any person to erect, enlarge, alter or relocate any sign without first having obtained a sign permit and paying the permit fees.

(b) Application for Permit. Application for a sign permit shall be made on forms provided by the County and shall include, or be accomplished by, the following:

(1) Name, address, telephone number and signature of the property owner.

(2) Name, address and telephone number of the applicant (owner of the sign).

(3) Name, address and telephone number of the contractor.

(4) A plot plan showing the boundaries of the parcel on which the sign(s) is to be located, as well as the location of the sign(s) and all structures on the site. Parking, landscaping and other site features shall also be indicated.

(5) Drawings of the proposed sign(s) showing the design, dimensions, mounting height, materials of construction and structural details.

(6) Drawings of all existing signs on the site showing their sizes and locations and the total area of all existing signs.

(7) Any other information deemed necessary by the administrator or his representative.

(c) Issuance of Permits. When all requirements of this article and the Washoe County Code have been satisfied and all fees paid, a sign permit shall be issued by the administrator or his representative.

(d) Fees. Fees for sign permits shall be based upon valuations and penalties contained in Chapter 100 of this code.

(e) Inspection. Any sign which is subject to this article shall be inspected by County inspectors to insure compliance with this article and Chapter 100.

(f) Suspension and Revocation. Any permit issued in error, or in reliance on a falsified application, may be revoked by the administrator. Any sign erected or partially erected under a permit issued pursuant to a falsified application may be ordered removed at the owner's expense.

(g) Enforcement. Any sign which is erected, altered, enlarged or relocated without a valid sign permit is a violation of this article and is subject to the penalties and abatement procedures contained in the Washoe County Code.

[Added by Ord. 1035, provisions eff. 8/28/98.]

Section 110.504.25 Regulated Signs; Variance.

(a) All signs regulated by this article that are erected or located in the County, which are not exempted by Section 110.504.30, Exempted Signs, are subject to the provisions of this article as to their location, size, height, type and function. Engineering and construction of signs are subject to Chapter 100. Types of signs which are not specifically mentioned are permitted subject to the regulations contained in this article.

(b) The Director of Community Development may, in his sole discretion, permit variations not exceeding ten (10) percent of spacing and height requirements if undue hardship is shown in the manner required by Section 110.804.25, Findings, of this code.

[Added by Ord. 1035, provisions eff. 8/28/98. Amended by Ord. 1288, provisions eff. 3/24/06.]

Section 110.504.30 Exempted Signs. Except to the extent they are subject to special standards, the following types of signs and displays are not subject to the provisions of this article and need not be included in any aggregate area computations:

(a) Official traffic-control or regulatory signs, signals or devices, street-name signs or other signs required by law.

(b) Changes in copy or advertising display on an existing sign which do not alter the structure, size or configuration of the sign. Not exempted is the change of an off-premise sign to an on-premise sign or the change of an on-premise sign to an off-premise sign.

(c) Holiday decorations.

(d) Safety or caution signs, legal notices, public utility signs.

(e) Memorial tablets, plaques or markers of bronze, stone or concrete.

(f) "Open", "Closed", "No Trespassing", "Warning" and similar signs not exceeding two (2) square feet.

(g) Address numbers or plates and residential nameplates.

(h) Civic displays.

(i) Flags, emblems or insignia of any nation, state or political subdivision, provided that they do not number more than three (3), that the individual surface area is not greater than sixty (60) square feet, and that the supporting structures are not greater than the larger of twenty (20) feet high or ten (10) feet more than the permitted height for a freestanding sign. Such signs not exempted are counted and regulated in accordance with this article.

(j) Indoor posters.

(k) Architectural graphics.

(l) Signs which are located within a structure and not visible from a public street, sidewalk or alley or other public area.

(m) Directional signs.

(n) Time and temperature signs.

(o) Stationary lights which illuminate a building or adjacent grounds and do not directly illuminate another sign; and lights which outline building features and are not part of the integrated background or outline of a sign.

[Added by Ord. 1035, provisions eff. 8/28/98.]

Section 110.504.35 Prohibited Signs. The following types of signs and displays are prohibited:

(a) Signs which constitute a hazard to traffic or pedestrians.

(b) Signs located within any stream or drainage channel.

(c) Mobile signs or portable signs unless carried by a natural person or by a motor vehicle as provided in Section 110.504.45, Special Standards by Type of Sign.

(d) Three dimensional figures of humans or animals.

(e) Signs which produce odor, sound, smoke, flame or other emissions.

(f) Signs which imitate or simulate official signs, or which use yellow or red blinking or intermittent lights resembling danger or warning signs.

(g) Strobe lights or individual light bulbs exceeding 75 watts, if rays of light project directly from the source into residences or streets, or any moving beam of light.

(h) Signs on public property or rights-of-way; signs attached to utility poles, street-light standards, trees or fences.

(i) Wind signs, other than those exempted.

(j) Moving signs.

[Added by Ord. 1035, provisions eff. 8/28/98.]

Section 110.504.40 Signs Requiring a Special Use Permit. The following types of signs are allowed only when approved by special use permit reviewed by the Board of Adjustment:

(a) Freestanding signs as provided in Section 110.504.15, General Standards.

(b) Signs which are integrated into the architectural design of a building and which would be prohibited by a strict application of this article.

(c) Kiosks or neighborhood bulletin boards.

(d) Electrically animated and flashing signs and electronic variable message signs.

[Added by Ord. 1035, provisions eff. 8/28/98, amended by Ord. 1378, provisions eff. 8/1/08.]

Section 110.504.45 Special Standards by Type of Sign.

(a) Mobile and portable signs are permitted under the following conditions:

(1) The sign must be painted or otherwise directly attached flat against the exterior surface of the body of the vehicle or trailer or, if on a cargo-type body, the sign must be attached flat against the stake racks or other standard vehicle accessories used to confine cargo loads on the bed of the vehicle or trailer.

(2) The vehicle or trailer must be currently licensed and registered by the Nevada Department of Motor Vehicles and Public Safety and must be legally operable and capable of being operated on the public roads.

(3) The vehicle or trailer is required for and is used to transport people or goods in connection with the business or other activity or interest being advertised.

(4) The sign may not be illuminated and may not contain letters or symbols which are manually replaceable in order that the copy can be easily changed from time to time.

(b) Directory signs shall be permitted at major entrances to residential, commercial, industrial or office complexes to identify occupants, addresses or building numbers for the convenience of visitors and to facilitate emergency services. Directory signs shall not exceed six (6) feet in height. No more than three (3) square feet shall be devoted to any single occupant. Directory signs shall not be included in allowable sign-area limit computations or when calculating the number of signs on a site. A permit is required.

(c) Community directory signs shall be permitted at major entrances to an identifiable community in the County.

(d) Directional signs not exceeding twelve (12) square feet in area shall not be included in allowable sign area computations or when calculating the number of signs on a site. A permit is required.

(e) Two (2) fuel price signs not exceeding sixteen (16) square feet per face shall not be included in allowable sign-area computations or when calculating the number of signs on a site. A permit is required.

(f) Area identification signs shall be permitted at major entrances to neighborhoods, subdivisions, residential complexes, shopping centers, and office or industrial complexes. Area identification signs shall not exceed six (6) feet in height, or one hundred twenty-eight (128) square feet in area and shall not be included in allowable sign-area computations or when calculating the number of signs on the site. A permit is required.

(g) Unless specifically required in this section, a permit is not required for temporary signs. A person may erect a temporary sign without a permit if:

(1) The sign area is not more than one hundred twenty-eight (128) square feet.

(2) The height of the sign is not more than eight (8) feet.

(3) The aggregate sign area of all temporary signs on the premises is not more than one hundred twenty-eight (128) square feet.

(4) The sign, if it is a commercial sign, complies with the requirements of paragraphs (h) through (j) of this section.

(5) The location is at a distance not less than fifteen (15) feet from any public road from which the sign is visible by passing motorists, unless a building is so located on the premises as to preclude erecting the sign anywhere on the premises, in which case the sign may be attached to or mounted against the building.

(h) In addition to the location requirements of paragraph (g) of this section, no person may erect a temporary commercial sign on private property unless:

(1) The sign is not more than four (4) square feet.

(2) The height of the sign is not more than five (5) feet.

(3) The aggregate sign area of all temporary commercial signs on the premises is not more than eight (8) square feet.

(4) The sign is firmly attached to a structure.

(i) Notwithstanding the area and height limitations of paragraph (h) of this section, temporary project sales signs shall be allowed during the period when a developer or builder is actively engaged in the sale of lots or houses, or the sale or lease of space in a commercial, industrial or office development, provided they are maintained in good condition. One (1) sign is allowed for each of no more than two (2) major public entrances to the project area. Individual signs may not exceed one hundred twenty-eight (128) square feet or eight (8) feet in height. A permit is required.

(j) Additional restrictions on temporary real estate signs are as follows:

(1) One (1) sign conforming to the height and area limitations in paragraph (h) of this section is allowed on residential property and on any property less than one (1) acre in size. On commercial, industrial or office properties over one (1) acre, one (1) sign not to exceed thirty-two (32) square feet in size shall be allowed for each street frontage.

(2) Two (2) signs with or without a supporting structure, each no larger than four (4) square feet, carrying the words “open house”, “open for inspection” or words of similar import are allowed while the building being shown is in fact open to the public.

(k) Additional restrictions on temporary residential real estate signs in areas within the jurisdiction of the Tahoe Regional Planning Agency are as follows:

(1) One (1) sign is allowed if the sign:

(i) Does not exceed one (1) square foot in area.

(ii) Is placed inside a window, or if no window is visible from a public street, is attached to a building. If no building is on the premises, the sign must be attached to a freestanding structure at least three and one-half (3.5) inches in cross-section. If freestanding, the sign must be parallel to the street to which it is oriented.

(2) Two (2) signs conforming to paragraph (j)(2) of this section are allowed.

(l) A logo or a series of logos may be permanently affixed to one (1) sign erected on the site of a non-profit organization or educational institution with the following restrictions:

(1) The area of the sign on which the logo(s) are affixed may not exceed fifteen (15) percent of the total sign area.

(2) Animated signs shall not display a logo as an animated message.

(3) The logos shall only identify supporters of the organization or institution.

(i) If the sign on which a logo or logos are to be affixed was erected prior to the effective date of the ordinance adding this section (September 19, 2003), the non-profit organization or educational institution shall identify to the Director of Community Development the supporters that the organization/institution wishes to recognize and the proposed location of the logos on the sign prior to the affixing of any logos to an existing sign.

(ii) If a sign on which a logo or logos are to be affixed is to be erected after the effective date of the ordinance adding this section (September 19, 2003), the supporters that the organization/institution wishes to recognize and the proposed location of the logos shall be identified at the time of application for a permit to erect the sign.

(4) Should the organization/institution physically relocate from, or physically cease to exist on, the site on which the sign that has supporters’ logos

affixed, the aforementioned sign shall be altered to remove the logo(s) within thirty (30) days of cessation of operations or relocation of the organization/institute.

(m) The perimeter wall of an athletic field used primarily by teams sponsored by non-profit organizations or educational institutions may have advertising located on the inside of the perimeter wall/fence (facing the playing field), and scoreboards associated with an aforementioned athletic field and erected behind or in front of a perimeter wall/fence of the athletic field may have advertising located on the scoreboard insofar that the advertising faces the playing field. Advertising may be located with the following restrictions:

(1) For advertising located on the perimeter wall/fence of the athletic field, the advertising display shall not extend above the height of the perimeter wall.

(2) For advertising located on a scoreboard, the advertising area shall be an integral part of the scoreboard and not an addition to the perimeter of the scoreboard structure.

(3) The advertising shall only identify supporters of the organization/ institution and the organization's/institution's associated teams that primarily use the athletic field.

[Added by Ord. 1035, provisions eff. 8/28/98. Amended by Ord. 1213, provisions eff. 9/19/03.]

Section 110.504.50 Special Standards by Regulatory Zone. The following special standards, by regulatory zone, shall apply:

(a) Rural, Suburban and Urban Residential Regulatory Zones; General Rural Agricultural (GRA) and General Rural (GR) Regulatory Zones; except as provided in paragraphs (b) and (c) of this section:

(1) Maximum height of freestanding signs is the larger of six (6) feet or height permitted in Section 110.504.45, Special Standards by Type of Sign.

(2) Allowable sign area shall be as proved in Section 110.504.45, Special Standards by Type of Sign. Other permanent signs may not exceed sixteen (16) square feet.

(3) Illumination shall be indirect only.

(4) Moving, animated or flashing signs are not allowed.

(5) Projecting signs are not allowed.

(b) Office uses permitted in Residential Regulatory Zones:

(1) Maximum height of freestanding sign is the larger of six (6) feet or height permitted in Section 110.504.45, Special Standards by Type of Sign.

(2) Allowable sign area may not exceed three-quarter (.75) square feet per one hundred (100) square feet of gross floor area.

(3) Illumination shall be indirect only.

(4) Moving, animated or flashing signs are not allowed.

(5) Projecting signs not exceeding four (4) square feet per sign are allowed.

(c) Commercial uses permitted in Residential Regulatory Zones and Neighborhood Commercial/Office (NC) Regulatory Zones:

(1) Maximum height of freestanding sign is twenty-five (25) feet.

(2) Allowable sign area shall be the larger of two (2) square feet per linear foot of allowable business frontage or one (1) square foot per lineal foot of site frontage.

(3) All types of illumination are allowed.

(4) Flashing, animated or moving signs are not allowed.

(5) Projecting signs not exceeding six (6) square feet per sign are allowed.

(d) Uses permitted in General Commercial (GC), Office Commercial (OC) and Tourist Commercial (TC) Regulatory Zones:

(1) Maximum height of freestanding sign is thirty (30) feet.

(2) Allowable sign area shall be the larger of two and one-half (2.5) square feet per linear foot of allowable business frontage or one (1) square foot per linear foot of site frontage.

(3) All types of illumination are allowed.

(4) Flashing, animated or moving signs are not allowed.

(5) Projecting signs not exceeding six (6) square feet are allowed.

(e) Unlimited gaming uses in General Commercial (GC) and Tourist Commercial (TC) Regulatory Zones:

(1) Maximum height of freestanding sign is forty (40) feet.

(2) Allowable sign area shall be the larger of five (5) square feet per linear foot of allowable business frontage or one (1) square foot per linear foot of site frontage.

(3) All types of illumination are allowed.

(4) Mechanically animated signs and moving signs are not allowed. Animated signs which use lights to simulate or create the effect of motion and flashing signs are allowed, subject to the condition that the area of the sign which contains or is illuminated by an electronic variable message shall be multiplied by two (2) when computing allowable sign area.

(5) Projecting signs are allowed.

(f) Uses permitted in Industrial (I) Regulatory Zones:

(1) Maximum height of freestanding sign is twenty-five (25) feet.

(2) Allowable sign area shall be the larger of one (1) square foot per one hundred (100) square feet of gross floor area or one (1) square foot per linear foot of site frontage not to exceed one hundred twenty-eight (128) square feet per occupant.

(3) All types of illumination are allowed.

(4) Flashing, animated or moving signs are not allowed.

(5) Projecting signs not exceeding six (6) square feet are allowed.

[Added by Ord. 1035, provisions eff. 8/28/98. Amended by Ord. 1475, provisions eff. 1/12/12.]

Section 110.504.55 Sign Credits; Types; Computation.

(a) Signs Qualifying for Credits.

(1) Support Structure. In addition to the requirements of paragraphs (2) and (3), the sign must be supported by a steel structure having a capability of supporting the sign for at least fifty (50) years.

(2) Structure Credit. If a billboard to be removed is more than two hundred (200) square feet in sign area and is more than twenty-five (25) feet in height, twenty (20) structure credits are allowed. Each credit equals one (1) lineal foot of height that may be added to height limitations on the signs to which the credits are applied as follows: As provided in Section 110.504.15(d), up to twenty (20) feet may be added, without a special use permit, to the height otherwise allowed without a special use permit (20 feet). Twenty (20) credits may be used for an additional freestanding sign.

(3) Sign Area Credit. If a billboard to be removed is more than twenty-five (25) feet in height and is more than two hundred (200) square feet in sign area, sign area credits are allowed equal to the lawfully existing off-premise sign area. No more than one-half (.5) of the sign area credits may be applied to any one (1) freestanding on-premise sign. The remaining credits may be applied to wall signs, projecting signs and roof signs or may be converted as follows: two hundred (200) sign area credits may be converted to a single freestanding sign twenty (20) feet in height and fifty (50) square feet in sign area.

(b) Procedure for Obtaining and Using Sign Credits; Scenic Easement.

(1) In General Commercial (GC), Office Commercial (OC), Tourist Commercial (TC) and Industrial (I) Regulatory Zones, the owner or occupant of the premises may obtain sign credits by the removal of lawfully existing billboards and structures if:

(i) A perpetual restrictive covenant, scenic easement and agreement satisfactory to the County prohibiting off-premise signs is recorded with the County Recorder; and

(ii) All billboards and supporting structures are removed in accordance with the terms of the agreement.

(2) With respect to credits attributable to a single billboard, one-half (.5) of the sign area credits may be used immediately upon recording of the documents. One-half (.5) of the sign area may not be used until the billboard and structure are completely removed, unless the structure credits are waived, in which case all sign area credits may be used immediately (for wall signs, projecting signs and roof signs) upon recording of the documents.

(3) In a General Commercial (GC) and Tourist Commercial (TC) Regulatory Zone where unlimited gaming exists or is permitted, sign area credits are allowed as follows:

(i) One and one-half (1.5) square feet per lineal foot of allowable business frontage if fifty (50) to one hundred (100) hotel or motel rooms are located on or proposed for the premises; or

(ii) Three (3) square feet per lineal foot of allowable business frontage if more than one hundred (100) hotel or motel rooms are located on or proposed for the premises.

(4) In all regulatory zones, the maximum height of a freestanding sign may be increased by ten (10) percent, without a special use permit, if the sign is installed in a planter landscaped with drought resistant evergreen plants and having an area two (2) times the area of the sign.

(c) Exemption from Requirements. To the extent a sign is based on credits, it shall be allowed without a special use permit in excess of otherwise applicable limits on area, number and height.

(d) Transfer of Credits. Credits are appurtenant to, and may not be transferred from, the premises from which the credits were derived, except that credits may be used on abutting premises under the same ownership.

[Added by Ord. 1035, provisions eff. 8/28/98. Amended by Ord.1288, provisions eff. 3/24/06.]

Section 110.504.60 Nonconforming Signs.

(a) Right to Maintain and Continue the Use of a Nonconforming Sign. A nonconforming sign subject to the provisions of this article may be maintained and continued in use, provided that:

(1) It is not altered, enlarged or relocated without a sign permit.

(2) It is maintained in good repair and does not become unsightly or hazardous.

(b) Termination of Right to Nonconforming Sign.

(1) Any nonconforming sign which is declared a hazard by the administrator shall be removed or repaired within ten (10) days of notice to the owner of the sign.

(2) Any nonconforming sign which requires repairs costing in excess of fifty (50) percent of its replacement value shall be removed or made to comply with the provisions of this article.

(c) Alteration, Enlargement or Relocation. No permit shall be issued for the alteration, enlargement or relocation of a nonconforming sign unless the changes will bring the sign into conformance with the provisions of this article.

(d) Reporting. Applicants for new business licenses or for renewals of existing business licenses shall submit, with the application, information showing the size and location of existing signs and buildings on the premises where the business will be conducted.

[Added by Ord. 1035, provisions eff. 8/28/98. Amended by Ord.1288, provisions eff. 3/24/06.]

Section 110.504.65 Discontinued Signs.

(a) Removal of Discontinued Signs. Any sign or sign structure which has been discontinued for a period of six (6) months shall be removed or restored to use within thirty (30) days after a notice that the sign has been discontinued is issued to the owner of the sign. Notice shall be given by the Director of Community Development using certified mail. The Director of Community Development may allow a discontinued sign or sign structure to remain in place; provided that the sign or sign structure is maintained in good condition, and that there is a reasonable possibility that the sign can be restored to use within a one (1) year period.

(b) Criteria for Establishing That a Sign Has Been Discontinued. A sign or sign structure shall be considered discontinued when any of the following occurs:

(1) Copy on the sign is out of date.

(2) Any business advertised on the sign is no longer located on the premises.

(3) Any product or service advertised on the sign is no longer offered on the premises.

(4) The structure no longer supports a sign or the sign no longer contains an advertising display.

(5) A sign structure or advertising display is visibly damaged or partially missing.

[Added by Ord. 1035, provisions eff. 8/28/98. Amended by Ord.1288, provisions eff. 3/24/06.]

Section 110.504.70 Signs on Public and Utility Property.

(a) Signs Prohibited. No person may erect a sign on or over real or personal property, easements or rights-of-way owned by a public agency or by a privately owned public utility.

(b) Exemptions. Signs exempted from the prohibition in paragraph (a) are:

(1) Signs approved by the public agency or public utility.

(2) Signs which are erected for the safety of motorists and pedestrians in connection with hazardous activities being conducted on the property, easement or right-of-way or on adjacent private property.

(3) Official signs and signs required by law.

(4) Signs for which an encroachment permit has been issued.

(5) House numbers painted on curbs.

(6) Signs carried by natural persons.

(c) Removal. Any sign found erected contrary to the provisions of this section shall be removed by the Sheriff's Office or the Department of Public Works. Advance notice of removal need not be given. The removed signs must be stored for thirty (30) days. During that period, the sign must be made available to the owner and must be returned upon payment of the cost incurred in the removal.

[Added by Ord. 1035, provisions eff. 8/28/98.]

Division Six - Subdivision Regulations
CONTENTS

	Page
Subdivision Regulations: Title and Contents	600-1
General Subdivision Provisions	602-1
Design Requirements	604-1
Parcel Maps	606-1
Tentative Subdivision Maps	608-1
Final Subdivision Maps	610-1
Division of Land into Large Parcels	612-1
Reversion to Acreage	614-1
Amendments of Map	616-1
Boundary Line Adjustment	618-1

Article 600
SUBDIVISION REGULATIONS: TITLE AND CONTENTS

Sections:

110.600.00	**Title**
110.600.05	**Contents**

Section 110.600.00 Title. Division Six of Chapter 110, Development Code, is entitled Subdivision Regulations.

Section 110.600.05 Contents. Division Six consists of the following articles:

(a) ARTICLE 600 SUBDIVISION REGULATIONS: TITLE AND CONTENTS

(b) ARTICLE 602 GENERAL SUBDIVISION PROVISIONS

(c) ARTICLE 604 DESIGN REQUIREMENTS

(d) ARTICLE 606 PARCEL MAPS

(e) ARTICLE 608 TENTATIVE SUBDIVISION MAPS

(f) ARTICLE 610 FINAL SUBDIVISION MAPS

(g) ARTICLE 612 DIVISION OF LAND INTO LARGE PARCELS

(h) ARTICLE 614 REVERSION TO ACREAGE

(i) ARTICLE 616 AMENDMENTS OF MAP

(j) ARTICLE 618 BOUNDARY LINE ADJUSTMENT

Article 602
GENERAL SUBDIVISION PROVISIONS

Sections:

110.602.00	**Purpose**
110.602.05	**Subdivision Regulations: Purpose**
110.602.10	**Statement of Policy**
110.602.15	**Applicability**
110.602.20	**Required Mapping**
110.602.25	**Compliance**
110.602.30	**Strict Conformance**
110.602.35	**Monument Locations**
110.602.40	**Monument Identification**
110.602.45	**Monument Physical Requirements**
110.602.50	**Monument Inspection**
110.602.55	**Proposed Street and Highway Names**
110.602.60	**Dedications Required**
110.602.65	**Animals**

Section 110.602.00 Purpose. The purpose of this article, Article 602, General Subdivision Provisions, is to set forth definitions and other general provisions which shall apply throughout Division Six of the Development Code.

Section 110.602.05 Subdivision Regulations: Purpose. The purposes of the subdivision regulations are the following:

(a) Plan Implementation. To implement the Washoe County Master Plan, including the area plans, and any specific plans adopted by the County;

(b) Orderly Process. To establish reasonable standards of design and reasonable procedures for subdivision and re-subdivision in order to further the orderly layout and use of land and insure proper legal descriptions and monumenting of subdivided land; and

(c) Public Health, Safety and General Welfare. To safeguard the public health, safety and general welfare by establishing minimum standards of design and development for any subdivision platted in the unincorporated area of Washoe County.

[Amended by Ord. 1447, provisions eff. 9/9/10.]

Section 110.602.10 Statement of Policy. It is the policy of Washoe County regarding subdivisions that:

(a) County Control. The subdivision and subsequent development of land shall conform to the adopted Master Plan, including the area plans and any specific plans of Washoe County, and the other provisions of the Development Code;

(b) Safety of Development. All subdivided land should be of such character that it can be used safely for building purposes by future holder of title without unreasonable danger to health or peril from fire, flooding or other hazards; and

(c) Facilities and Services. In accordance with the Master Plan policies, provisions shall be made for water supply; runoff and wastewater management; streets, roads and highways; and other public facilities and services.

[Amended by Ord. 1447, provisions eff. 9/9/10.]

Section 110.602.15 Applicability. The regulations provided by the subdivision regulations shall apply to all subdivisions and parts of subdivisions hereafter made entirely or partially within the unincorporated territory of Washoe County except as provided next and as otherwise stated in Chapter 110, Development Code.

(a) Exempt Subdivisions. Division Six of this Development Code, including without limitation, any requirements relating to the adjustment of boundary lines or the filing of a parcel map or record of survey, does not apply to the division, exchange or transfer of land for agricultural purposes if each resulting parcel meets all of the following requirements:

(1) Is ten (10) acres or more in size or meets the minimum lot size enumerated in Article 406, whichever is greater;

(2) Has a regulatory zoning classification that permits agricultural uses or is consistent with the designation in the Master Plan;

(3) Qualifies for an agricultural use assessment pursuant to NRS Chapter 361A and applicable regulations and any applicable regulations adopted pursuant thereto;

(4) Has permanent, documented, and code compliant access either by way of an existing public street or through adjacent property under the same ownership as the created parcel, covenanted for such purpose, or served by an irrevocable easement that is retained with the land through the created parcel;

(5) Its legal description is clear and complete with graphic depiction and by reference to the standard subdivisions used in the United States Public Land Survey System; and

(6) No new residential or commercial structures are proposed to be built on the property after the parcel is created.

(b) Application Required and Deed. This exemption is established only upon approval by the Director of the Department of Community Development ("Director") of the owner's application therefore, prepared on a form authorized by the Director, and accompanied with proof to establish that each parcel resulting from such creation is deed restricted with disclosures about potential disqualification of this exemption and the consequences (including compliance with land division improvements under NRS Chapter 278 and deferred property tax recapture under NRS Chapter 361A). The proof must also establish that each parcel resulting from such creation satisfies the requirements addressed in subsection (a) above. The Director shall determine in writing, in conjunction with

applicable departments and within 30 working days of submission of the application, whether the proof is adequate and complete. Any related document to be recorded must be entitled "Deed of Division For Agriculture Purposes."

(c) Disqualification of Exemption. The failure to prove all requirements for this exemption shall be grounds for denial of the application, and failure of a resulting parcel to maintain the requirement of Sections (a)(3) and (a)(6) above after the date of the division, exchange or transfer, shall disqualify such resulting parcel from this exemption by operation of law, in which case the current owner shall be required to comply with all applicable property tax and land division law, including without limitation the laws concerning survey, land improvements, and recapture of deferred property tax.

[Amended by Ord. 1364, provisions eff. 4/4/08.]

Section 110.602.20 Required Mapping. All subdivisions in Washoe County shall be recorded with either a final map, parcel map or division of land into large parcels.

Section 110.602.25 Compliance. If any property in a subdivision is offered for sale before a final map is recorded in the Office of the County Recorder for that property, the seller or his or her authorized agent shall disclose to any potential buyer that the final map has not yet been recorded. Any offer to sell, contract to sell, sale or transfer contrary to the provisions of NRS 278 is a misdemeanor, and shall be punished by a fine of not more than $1,000.00.

Section 110.602.30 Strict Conformance. When strict conformance to the requirements of Division Six is impracticable or impossible, modifications which are not in violation of the spirit and purpose of the entire Development Code may be allowed pursuant to Article 804, Variances.

Section 110.602.35 Monument Locations. All monuments shall be located as set forth in this section.

(a) Final Monument Locations. Final monuments shall be set at:

(1) Each corner of the boundary of the subdivision and at intermediate points at approximately 1,000 feet or at lesser distances if topographical conditions warrant;

(2) Intersections of centerlines of streets;

(3) Sufficient locations along the centerlines of streets so that the centerline may be retraced; these locations may be at, or on an offset to, an angle to the centerline of a street, the center of a cul-de-sac, a point which defines a curve (the beginning or end of a curve or a point of intersection of a tangent) or an intersection with a boundary of the subdivision; and

(4) A position for a corner system of rectangular surveys directly relevant to property lines and corners of the subdivision.

(b) Exceptions to Final Monument Locations. If a monument required by Subsection (a) of this section cannot be set because of steep terrain, water, marsh or existing structures, or if it would be obliterated as a result of proposed construction, one or more reference monuments must be set. In addition to the physical requirements for a monument, the letter "RM" and "WC" must be stamped in the tablet, disc or cap. If only one reference monument is used, it

must be set on the actual line or a prolongation thereof. Otherwise, at least two (2) reference monuments must be set. These monuments shall be deemed final monuments.

Section 110.602.40 Monument Identification. All monuments set as required herein shall be permanently marked or tagged with the letters "PLS" followed by the professional land surveyor's registration number that set the monument.

Section 110.602.45 Monument Physical Requirements. All monuments shall meet the physical requirements as set forth in this section.

(a) General Final Monument Requirements. The final monument shall, except as otherwise provided in Subsections (b) and (c) of this section, consist of a nonferrous tablet, disc or cap securely attached to the top of a metallic shaft solidly imbedded in the ground, with a minimum diameter of five-eighths (5/8) of an inch and a length adequate to resist removal.

(b) Final Monuments in Paved Areas. A final monument required by Section 110.602.35 which falls into a paved area shall consist of a well lid placed so that the top of the tablet, disc or cap of the monument is not less than four (4) inches below the surface of the pavement.

(c) Final Monuments on Bedrock or Concrete. If a monument required by Section 110.602.35 falls on solid bedrock or on a concrete or stone roadway, curb, gutter or walk, a durable nonferrous metal tablet, disc or cap shall be securely anchored in the rock or concrete.

Section 110.602.50 Monument Inspection. All monuments shall be subject to inspection by the County Engineer.

Section 110.602.55 Proposed Street and Highway Names. The naming of all new streets and highways, or the proposed re-naming of streets and highways, shall conform to the procedures adopted by the Regional Street Naming Committee.

[Amended by Ord. 876, provisions eff. 7/7/93.]

Section 110.602.60 Dedications Required. Dedications for watercourse channels, streams or creeks may be required and the dedication of land for park, recreation, school or other public purposes in an amount and location consistent with the type, proposed character and location of such subdivision may be required as a condition precedent of tentative plat approval.

Section 110.602.65 Animals. Animals kept for private, non-commercial use in new subdivision developments are allowed as set forth in Article 306, Accessory Uses and Structures, and pursuant to all provisions of Washoe County Code, Chapter 55; all Washoe County District Health regulations; and NRS 574. Animals kept for commercial or agricultural uses are regulated by Article 304, Use Classification System.

[Added by Ord. 876, provisions eff. 7/7/93.]

Article 604
DESIGN REQUIREMENTS

Sections:

110.604.00	**Purpose**
110.604.05	**Applicability**
110.604.10	**Streets**
110.604.15	**Setbacks**
110.604.20	**Intersections**
110.604.25	**Pedestrian Circulation and Access**
110.604.30	**Utilities**
110.604.35	**Street Lighting**
110.604.40	**Energy Conservation**
110.604.45	**Existing Vegetation**
110.604.50	**Snow Storage**
110.604.55	**Subdivisions Adjacent to Public Land**
110.604.60	**Conversion of Manufactured Home Park Spaces to Individually Owned Lots**

Section 110.604.00 Purpose. The purpose of this article, Article 604, Design Requirements, is to set forth subdivision design requirements.

Section 110.604.05 Applicability. The design requirements within this article shall apply to all tentative subdivision maps, parcel maps and division into large parcels.

Section 110.604.10 Streets. Streets within the subdivision shall be designed in conformance with Article 436, Street Design Standards.

[Amended by Ord. 908, provisions eff. 10/15/94.]

Section 110.604.15 Setbacks. Setback requirements shall be in conformance with this section.

(a) Front Yard Setback Requirements. A lot shall have a front yard setback as stated in Article 406, Building Placement Standards.

(b) Minimum Building Setback Requirements. No building in any regulatory zone shall be constructed or altered closer than fifty (50) feet to the centerline of any major arterial, or forty (40) feet to the centerline of any minor arterial, or thirty (30) feet to the centerline of any through street.

Section 110.604.20 Intersections. Intersections within the subdivision shall be designed in conformance with Article 436, Street Design Standards.

[Amended by Ord. 908, provisions eff. 10/15/94.]

Section 110.604.25 Pedestrian Circulation and Access. In all subdivisions, a plan for pedestrian circulation and access in conformance with the appropriate area plan of the Washoe

County Master Plan shall be prepared and implemented to the satisfaction of the County Engineer.

[Amended by Ord. 1447, provisions eff. 9/9/10.]

Section 110.604.30 Utilities. All public utilities shall be placed underground, except in the case where underground placement of utilities is shown to not be feasible, in which case the County Engineer may approve exceptions to this requirement.

Section 110.604.35 Street Lighting. Street lights are required for major street intersections or hazardous street intersections. Major street intersections are those intersections having at least one intersecting street with a minimum designed vehicular speed limit of forty-five (45) miles per hour. Hazardous intersections are those intersections determined to be hazardous by the traffic-control committee because of detrimental physical characteristics. All street lighting shall be luminaries in accordance with local utility standards, and as determined appropriate by the County Engineer to be required. Light poles shall be either wooden or metal, or other material, as required by the County Engineer.

Section 110.604.40 Energy Conservation.

(a) Design. The design of a subdivision for which a tentative map is required shall provide, to the extent feasible, for future passive or natural heating or cooling opportunities in the subdivision.

(1) Examples of passive or natural heating opportunities in subdivision design include design of lot size and configuration to permit orientation of a structure in an east-west alignment for southern exposure.

(2) Examples of passive or natural cooling opportunities in subdivision design include design of lot size and configuration to permit orientation of a structure to take advantage of shade or prevailing breezes.

(b) Considerations. In providing for future passive or natural heating or cooling opportunities in the design of a subdivision, consideration shall be given to local climate, contour, configuration of the parcel to be divided and other design and improvement requirements. This provision shall not result in reducing allowable densities, or the percentage of a lot which may be occupied by a building or structure under applicable plans in force at the time the tentative map is filed.

(c) Exceptions. The requirements of this section do not apply to condominium projects which consist of the subdivision of airspace in an existing building when no new structures are added.

(d) Definitions. For the purposes of this section, "feasible" means capable of being accomplished in a successful manner within a reasonable period of time, taking into account economic, environmental, social, and technological factors.

Section 110.604.45 Existing Vegetation. The subdivision shall be designed to preserve the greatest practicable amount of existing vegetation, including trees with a trunk caliper of eight (8) inches or greater. Native or ornamental trees required to be preserved, as shown on the tentative map, shall not be damaged. Trees and other vegetation damaged, destroyed, or removed without prior authorization of the Director of Community Development shall be replaced by the subdivider. The size and species of the replacement vegetation shall be in accordance with the provisions of Article 412, Landscaping.

Section 110.604.50 Snow Storage. Site plans, parcel maps, and tentative maps shall provide snow storage areas appropriate for the elevation and historic snowfall amounts.

Section 110.604.55 Subdivisions Adjacent to Public Land. When shown to be in the public's best interest, any site plan, parcel map, and tentative subdivision map adjacent to publicly owned land shall provide access easements of an appropriate width to the public land. Said easements shall be offered for dedication to an appropriate public agency.

Section 110.604.60 Conversion of Manufactured Home Park Spaces to Individually Owned Lots. Should a tentative subdivision map be approved pursuant to Article 606, Parcel Maps, or Article 608, Tentative Subdivision Maps, for the conversion of existing manufactured home park spaces to individually owned lots, the approval may not alter the existing density, uses, space sizes, setbacks or other similar restrictions as existed when the property was used as a manufactured home park. An approval may impose reasonable conditions to address health and safety concerns.

[Previous Section 110.604.60 entitled "Open Space and Recreational Trails" amended by Ord. 876, provisions eff. 7/7/93; Ord. 908, provisions eff. 10/15/94; and repealed by Ord. 949, provisions eff. 5/1/96. Added by Ord. 1220, provisions eff. 11/7/03.]

Article 606
PARCEL MAPS

Sections:

110.606.00	**Purpose**
110.606.05	**Parcel Map Required**
110.606.10	**Survey Required**
110.606.15	**Submittal of Tentative Parcel Map**
110.606.20	**Data to Accompany Tentative Parcel Map**
110.606.25	**Form of Tentative Parcel Map**
110.606.30	**Tentative Parcel Map Review Procedures**
110.606.35	**Submittal of Final Parcel Map**
110.606.40	**Form of Final Parcel Map**
110.606.45	**Contents of Final Parcel Map**
110.606.50	**Review Procedures for Final Parcel Map**
110.606.55	**Appeals**
110.606.60	**Certificates and Statements**
110.606.65	**Recordation**
110.606.70	**Expiration Date**
110.606.75	**Waiver of Parcel Map**
110.606.80	**Document Required if Parcel Map Waived**

Section 110.606.00 Purpose. The purpose of this article, Article 606, Parcel Maps, is to prescribe the requirements for, and waiver of, parcel maps.

Section 110.606.05 Parcel Map Required. A parcel map shall be required as set forth in this section.

(a) Parcel Map Required. A parcel map shall be required for all subdivisions, merger and re-subdivision of existing lots, and common-interest communities consisting of four (4) or fewer units, except as provided in this section.

(b) Exempt Divisions. A parcel map is not required when the division is for the express purpose of:

(1) The creation or realignment of a public right-of-way by a public agency;

(2) The creation or realignment of an easement;

(3) An adjustment of the boundary line between two (2) abutting parcels or the transfer of land between two owners of abutting parcels which does not result in the creation of any additional parcels;

(4) The purchase, transfer or development of space within an apartment building or an industrial or commercial building;

(5) Carrying out an order of any court of dividing land as a result of an operation of law;

(6) Creation of cemetery plots; or

(7) Creation of a lot for agricultural purposes that complies with Section 110.602.15.

(c) Exempt Transactions. A parcel map is not required for any of the following transactions involving land:

(1) The creation of a lien, mortgage, deed of trust, or any other security instrument;

(2) The creation of a security or unit of interest in any investment trust regulated under the laws of this state or any other interest in an investment entity;

(3) Conveying an interest in oil, gas, minerals or building materials which are severed from the surface ownership of real property;

(4) Conveying an interest in land acquired by the Department of Transportation pursuant to Chapter 408 of NRS; or

(5) Filing a certificate of amendment.

(d) Waiver. A parcel map may be waived pursuant to Section 110.606.75, Waiver of Parcel Map. The following division is eligible for consideration of a waiver: creation of sites for utility services, such as well sites, pump stations, transformer boxes, as long as the utility is a regulated utility or operated by a government entity. A waiver will require conformance with Section 110.606.80, Document Required if Parcel Map Waived.

(e) Separate Lots. When two (2) or more separate lots, parcels, sites, units or plots of land are purchased, they remain separate for the purposes of this article.

(f) Conveyance. When lots, parcels, sites, units or plots are resold or conveyed, they are exempt from the provisions of this article until further divided.

[Amended by Ord. 876, provisions eff. 7/7/93; Ord. 1088, provisions eff. 1/28/00; Ord. 1347, provisions eff. 11/2/07; Ord. 1364, provisions eff. 4/4/08.]

Section 110.606.10 Survey Required. A parcel map shall be based on a survey made for that purpose, unless this requirement is waived by the County Surveyor within forty-five (45) days of the submittal of an application for the waiver, unless this time is extended by mutual consent. The requirement of a survey may be waived if, in the judgment of the County Surveyor, a survey is not required to accomplish the purposes of this article. Failure of the County Surveyor to act on the waiver request within the time prescribed in this section shall result in approval of the waiver.

[Amended by Ord. 1041, provisions eff. 12/1/98; Ord. 1088, provisions eff. 1/28/00.]

Section 110.606.15 Submittal of Tentative Parcel Map. A tentative parcel map must be submitted to the Department of Community Development for the purpose of review prior to or concurrent with the final parcel map. Every tentative parcel map shall be prepared by a professional land surveyor and shall contain the following data:

(a) Existing Parcels. Boundary lines and dimensions of the parcel being divided, regulatory zone designation, and date of creation of the parcel being proposed to be subdivided.

(b) Pre-Existing Parcels. Pre-existing, contiguous parcels, held under the same ownership, may be merged into a single parcel with a simultaneous re-subdivision of that parcel as proposed in the tentative parcel map.

(c) Proposed Parcels. Proposed division lines using solid lines with dimensions of each parcel being created and proposed yards of each parcel being created that meet the requirements of this chapter using lines that are not solid.

(d) Area. The area of the original parcel and of each proposed new parcel.

(e) Rights-of-Way. Names, locations and widths of all streets, alleys or rights-of-way adjoining the property showing relationships to the streets in the proposed minor subdivision.

(f) Easements. The dimensions and approximate location of all existing or proposed road easements, sight triangles easements that preserve safe sighting at street intersections, slope and curve easements, conservation easements, open space easements, recreation or trail easements, drainage easements, sewer easements, irrigation ditch easements, or public utility easements, whether for public or private purposes.

(g) Slope. A general indication of the slope of the land.

(h) North Point and Scale. North arrow and scale of drawing.

(i) Street Names. All street names, denoting if they are existing or proposed.

(j) Parcel Data. Parcel designation and a graphic border around the proposed division. The area of each parcel and lot, and the total area of land to be divided. If the area is two (2) acres or more, the area shall be calculated to the nearest one-hundredth of an acre. If the area is less than two (2) acres, then the area shall be calculated in square feet.

(k) Monuments. All monuments found, set, re-set, replaced or removed, describing their size and location and other data.

(l) Bearings. Bearing or witness monuments, basis of bearings, bearing and length of lines, and scale of map.

(m) Legal Designation. The name and legal designation of the tract or grant in which the survey is located and any ties to adjoining tracts.

(n) Date of Survey. The date of the survey.

(o) Owners. The owner or owners of the land to be divided.

(p) Vicinity Map. A vicinity map of the location of the map.

(q) Other Data. Any other data necessary for the intelligent interpretation of the various items and locations of the points, lines, area shown and required yards.

[Renamed from "Preliminary Parcel Maps" and amended by Ord. 876, provisions eff. 7/7/93. Amended by Ord. 1088, provisions eff. 1/28/00.]

Section 110.606.20 Data to Accompany Tentative Parcel Map. The following data shall accompany a tentative parcel map:

(a) Owner. Name, legal address and telephone number of the owner of the land. In addition, an affidavit from the legal owner of the land acknowledging that a tentative parcel map is being prepared with his permission. If the subdivider of the land is different from the owner of the land, the name, legal address and telephone number of that person shall also be included.

(b) Preparer. Name, address and telephone number of the person who prepared the map.

(c) Legal Description. Legal description of original parcel. It is sufficient to give the County Recorder's book and page of deed and the County Assessor's parcel number.

(d) Proposed Use. Proposed use of each parcel.

(e) Water Supply and Sewage. Source of water supply and proposed method of sewage disposal for each parcel.

(f) Survey Computations. A copy of all survey computations.

(g) Existing Structures. If applicable, a map showing all structures located on the property and their distances from the proposed property lines and each other, and all septic and well locations.

[Renamed from "Data to Accompany Preliminary Parcel Map" and amended by Ord. 876, provisions eff. 7/7/93.]

Section 110.606.25 Form of Tentative Parcel Map. The tentative parcel map shall be legibly drawn. The size of each sheet must be twenty-four (24) by thirty-two (32) inches. A marginal line must be drawn completely around each sheet, leaving an entirely blank margin of one (1) inch at the top, bottom and right edges, and of two (2) inches at the left edge along the twenty-four (24) inch dimension.

[Added by Ord. 876, provisions eff. 7/7/93; Ord. 1088, provisions eff. 1/28/00.]

Section 110.606.30 Tentative Parcel Map Review Procedures. The review procedures for tentative parcel maps shall be as set forth in this section.

(a) Filing. The subdivider shall file with the Department of Community Development a complete application and the required supporting materials as outlined in the application packet. The subdivider shall pay the required fees upon the filing of the application.

(b) Application Review. The Community Development staff will review the submitted packet and accept or reject the application as complete within three (3) working days after the published application submittal date. If the application is complete, the Department of Community Development shall distribute the parcel map application to the Parcel Map Review Committee.

(c) Action Required by the Parcel Map Review Committee. If the application is determined to be complete, the Parcel Map Review Committee shall approve, conditionally approve, or disapprove the tentative parcel map within sixty (60) days of the date that the application is determined to be complete, unless the time limit is extended in writing by the mutual consent of the subdivider and the Director of Community Development. Failure of the Parcel Map Review Committee to take action within the time prescribed in this section shall result in approval of the parcel map.

(d) Notice of Property Owners by Mail of Submittal of Tentative Parcel Map (Second or Subsequent Tentative Parcel Maps). If the application for a tentative parcel map is for the subdividing of a lot or lots created within five (5) years of the recording of a map creating the original parcel, notice shall be provided to the following persons within ten (10) days of the meeting of the Parcel Map Review Committee, setting forth the time, place, purpose of hearing, and map or physical description of the land involved:

(1) All owners of real property that are the subject of the tentative parcel map application;

(2) Advisory boards created by the Board of County Commissioners for the area in which the property that is the subject of the tentative parcel map application is located;

(3) All owners of real property within five hundred (500) feet of the property which is the subject of the tentative parcel map application;

(4) All tenants of any mobile home or manufactured home park that is located within five hundred (500) feet of the property which is the subject of the tentative subdivision map application; and

(5) All General Improvement Districts (GID) for the area in which the property that is the subject of the tentative parcel map application is located.

(e) Notice of Property Owners by Electronic Means. If requested by a party pursuant to subsection (d) of this section and if receipt can be verified, an electronic notice must be provided at least ten (10) days before the meeting, setting forth the time, place, purpose of hearing, and map or physical description of the land involved.

(f) Number of Notices. If the number of notices sent pursuant to this section does not identify thirty (30) or more separate property owners, the County shall send out additional notices to achieve a total of at least thirty (30) separate property owners. These notices shall be sent to owners of real property that are closest to the property in question, not including those owners provided notice pursuant to Subsection (d) of this section.

(g) Compliance with Noticing Requirements. Owners of all real property to be noticed pursuant to this section shall be those owners identified on the latest County Assessor's ownership maps and records. Such notice is complied with when notice is sent to the last known addresses of such real property owners as identified in the latest County Assessor's records. Any person who attends the public hearing shall be considered to be legally noticed unless those persons can provide evidence that they were not notified according to the provisions of this section.

(h) Contents of Notice. Such notice as required by this section shall describe the proposed tentative parcel map's location and number of new lots to be created, describe the closing date for providing public comment to the Parcel Map Review Committee, and describe the content of public comment allowed to be considered by the Parcel Map Review Committee in making a decision.

(i) Review Criteria. Prior to approving a tentative parcel map, the Parcel Map Review Committee shall determine that the following are or will be adequately provided for:

(1) General improvement considerations for all parcel maps including, but not limited to:

(i) Environmental and health laws and regulations concerning water and air pollution, the disposal of solid waste, facilities to supply water, community or public sewage disposal and, where applicable, individual systems for sewage disposal;

(ii) The availability of water which meets applicable health standards and is sufficient for the reasonably foreseeable needs of the subdivision;

(iii) The availability and accessibility of utilities;

(iv) The availability and accessibility of public services such as schools, police and fire protection, transportation, recreation and parks;

(v) Conformity with the zoning ordinances and master plan;

(vi) General conformity with the governing body's master plan of streets and highways;

(vii) The effect of the proposed subdivision on existing public streets and the need for new streets or highways to serve the subdivision;

(viii) Physical characteristics of the land such as floodplain, slope and soil;

(ix) The recommendations and comments of those entities reviewing the tentative parcel map pursuant to NRS 278.330 and 278.348, inclusive;

(x) The availability and accessibility of fire protection including, but not limited to, the availability and accessibility of water and services for the prevention and containment of fires including fires in wild lands;

(xi) Community antenna television (CATV) conduit and pull wire; and

(xii) Recreation and trail easements.

(2) Subdivision improvement considerations for second or subsequent parcel maps pursuant to Section 110.606.30(d) and which are in addition to the criteria listed above.

(j) Conditions. An approval of any tentative parcel map may be subject to conditions relating to the items specified in Section 110.606.30(f), Review Criteria, as are reasonably necessary. For all tentative parcel maps subject to the notice required in this article, subdivision improvements shall be required, unless the Parcel Map Review Committee makes a finding that they are not appropriate. In addition, dedications and easement relating to such items may be required as a condition of approval.

(k) Notice of Action. The applicant shall be notified in writing of the decision of the Parcel Map Review Committee. If the tentative parcel map is conditionally approved, the notice of decision shall contain a statement of all conditions imposed. If the tentative parcel map is disapproved, a statement of the reasons for such disapproval shall be included.

(l) Appeal. The applicant may appeal any conditions imposed on the tentative parcel map or a disapproval of the parcel map to the Board of County Commissioners as set forth in Section 110.606.55, Appeals.

(m) No Guarantee of Final Map Approval. Approval or conditional approval of a tentative parcel map imposes no obligation on the part of the Director of Community Development, or the Board of County Commissioners to approve the final parcel map or to accept any public dedication shown on the tentative or final parcel map.

(n) Cessation of Further Action. Failure to submit a complete final parcel map and pay the required fees within the two (2) year time period shall cease any further action on the map and shall render the tentative map as expired. The provisions of Section 110.606.65 and Section 110.606.70 are also applicable to the filing of a final parcel map.

[Renumbered and renamed from Section 110.606.25 "Preliminary Parcel Map Review Procedures" and amended by Ord. 876, provisions eff. 7/7/93. Amended by Ord. 1041, provisions eff. 12/1/98; Ord. 1088, provisions eff. 1/28/00; Ord. 1156, provisions eff. 3/22/02; Ord. 1288, provisions eff. 3/24/06.]

Section 110.606.35 Submittal of Final Parcel Map. After approval or conditional approval of the tentative parcel map, the applicant may submit a final parcel map for review.

[Renumbered and renamed from Section 110.606.30 "Submittal of Parcel Map" and amended by Ord. 876, provisions eff. 7/7/93. Amended by Ord. 1041, provisions eff. 12/1/98; Ord. 1088, provisions eff. 1/28/00; Ord.1288, provisions eff. 3/24/06.]

Section 110.606.40 Form of Final Parcel Map. The final parcel map shall be legibly drawn in permanent black ink on tracing cloth or produced by the use of other materials of a permanent nature generally used for such purpose in the engineering profession. The size of each sheet must be twenty-four (24) by thirty-two (32) inches. A marginal line must be drawn completely around each sheet, leaving an entirely blank margin of one (1) inch at the top, bottom and right edges, and of two (2) inches at the left edge along the twenty-four (24) inch dimension.

[Renumbered and renamed from Section 110.606.35 "Form of Parcel Map" and amended by Ord. 876, provisions eff. 7/7/93.]

Section 110.606.45 Contents of Final Parcel Map. In addition to the information required by Sections 110.606.15 and 110.606.20, the following information must be shown on the final parcel map:

(a) Monuments. All monuments found, set, reset, replaced or removed, describing their kind, location and giving other data relating thereto;

(b) Oaths. A memorandum of oaths;

(c) Surveyor. The signature of the surveyor;

(d) Owners. The signature of the owner or owners of the land to be divided;

(e) Easements and Dedications. Any easements granted or dedications made including, but not limited to, community water and wastewater systems; and

(f) Survey. Name of the person or persons for whom the survey on which the map is based was made.

[Renumbered and renamed from Section 110.606.40 "Contents of Parcel Map" and amended by Ord. 876, provisions eff. 7/7/93. Amended by Ord. 1088, provisions eff. 1/28/00.]

Section 110.606.50 Review Procedures for Final Parcel Map. The review procedures for final parcel maps shall be as set forth in this section.

(a) Filing. The subdivider shall file with the Department of Community Development and County Engineer a final parcel map and the required supporting materials showing that all conditions imposed by the Parcel Map Review Committee have been met within twenty-two (22) months from the date of approval of the tentative parcel map. The subdivider shall pay the required fees upon the filing of the final parcel map.

(b) Application Review. The Community Development staff and County Engineer will review the submitted final parcel map and supporting materials and recommend to the Director or Community Development acceptance or rejection of the map as complete within fourteen (14) working days after submittal, unless the time limit is extended in writing by the mutual consent of the subdivider and the Director of Community Development.

(c) Action Required by Director of Community Development. Within twenty-five (25) working days of submittal of the final map application, the Director of Community Development shall determine whether the conditions placed on the tentative parcel map approval have been met. The final map application shall be considered incomplete if the Director of Community Development cannot make a determination that all of the tentative map conditions have been met. If the final parcel map is determined to be complete, the Director of Community Development shall approve or disapprove the map within thirty (30) working days of the submittal date, unless the time limit is extended in writing by the mutual consent of the subdivider and the Director of Community Development.

(d) Review Criteria. Prior to approving a final parcel map, the Director of Community Development shall determine that the following have been met:

(1) Completion of all conditions imposed on the subdivision prior to approval of the final parcel map or, in the alternative, acceptance by the Director of Community Development of a satisfactory guarantee of completion and faithful performance of all conditions. The amount of the guarantee shall be in a sum which, in the opinion of the County Engineer, equals one hundred twenty (120) percent of the cost of performance of the conditions. If a subdivider fails to perform any condition within the time specified, the Board of County Commissioners, upon recommendation of the County Engineer, may cause the guarantee to be forfeited in an amount necessary to finish the uncompleted portion of the work. If a security was previously posted to guarantee completion of improvements for two (2) or more contiguous parcels and those improvements will not be completed because of a merger and subsequent re-subdivision pursuant to this article, a credit on a pro-rata basis of the security posted by the owner shall be credited toward the financial assurance required for the parcel map re-subdivision.

(2) Completion of all certificates and statements required by Section 110.606.60, excepting (a) of that section.

(e) Notice of Action. The applicant shall be notified in writing of the decision of the Director of Community Development. If the final parcel map is disapproved, a statement of the reasons for such disapproval shall be included.

(f) Appeal. The applicant may appeal a disapproval of the final parcel map to the Board of County Commissioners as set forth in Section 110.606.55, Appeals.

[Renumbered and renamed from Section 110.606.45 "Review Procedures for Parcel Maps" and amended by Ord. 876, provisions eff. 7/7/93. Amended by Ord. 899, provisions eff. 5/31/94; Ord. 1041, provisions eff. 12/1/98; Ord. 1088, provisions eff. 1/28/00; Ord. 1156, provisions eff. 3/22/02; Ord. 1288, provisions eff. 3/24/06.]

Section 110.606.55 Appeals. All appeals regarding tentative and final parcel maps shall be made as provided in this section.

(a) Process for Tentative Parcel Map. A party aggrieved by a decision of the Parcel Map Review Committee may appeal the decision to the Board of County Commissioners in accordance with Section 110.912.20 of the Development Code.

(b) Process for Final Parcel Map. A person aggrieved by a decision of the Director of the Planning and Development Division regarding a Final Parcel Map may be appealed to the Board of Adjustment in accordance with Section 110.912.10 of the Development Code.

[Amended by Ord. 876, provisions eff. 7/7/93; Ord. 1041, provisions eff. 12/1/98; Ord. 1088, provisions eff. 1/28/00; Ord. 1156, provisions eff. 3/22/02; Ord. 1555, provisions eff. 5/8/15.]

Section 110.606.60 Certificates and Statements. Language satisfying the intent of the following certificates and statements shall appear on a parcel map before it can be filed for record. Final parcel maps that have been approved for recordation prior to July 31, 1993, but which have not been recorded, shall not be required to comply with this section.

(a) Certificate of Director of Community Development. A certificate for execution by the Director of Community Development stating that the map has been approved for subdivision purposes and accepted or rejected on behalf of the public any parcel of land, or portion of a parcel, offered for dedication for public use in conformity with the terms of the offer of dedication. If the final parcel map includes a merger of pre-existing lots and the re-subdivision of those lots, the certificate shall acknowledge that any public streets, easements or utility easements that will not remain were abandoned pursuant to Article 806.

(b) Summary Statement of Conditions Required. A summary statement of the conditions imposed by the Parcel Map Review Committee or Planning Commission.

(c) Certificate of Surveyor. A certificate by the surveyor responsible for the parcel map giving the date of survey on which the map is based, and stating that the survey was made by him or under his direction and setting forth the name of the owner who authorized him to make the survey, and that the parcel map is true and complete as shown. This certificate shall also state:

(1) That the monuments are of the character and occupy the position indicated or that they will be set in such positions and at such time as is agreed upon under the provisions of Chapter 278 of NRS;

(2) That the monuments are or will be sufficient to enable the survey to be retraced; and

(3) The completion date.

(d) Certificate of Record Title Owner. A certificate signed and acknowledged by all persons having any record title in the land subdivided, evidencing their grant or permanent easements for utility installations and access, as designated on the map.

(e) Certificate of Public Utilities Concerning Easements. A statement acknowledging such easements, signed by each public utility company or agency in whose favor the easements are created or whose utility services are to be required for the platted parcels. It is the responsibility of the applicant to obtain acknowledgement of serving utility companies as to location of any utility easements which are to be shown on the parcel map.

(f) Statement from County Treasurer. A written statement by the County Treasurer indicating that all property taxes on the land have been paid for the period identified in NRS 278.

(g) Guarantee of Title. A subdivision guarantee of title, in a form acceptable to the County Engineer and District Attorney, issued by a competent title company to and for the benefit and protection of the County. Said guarantee of title shall be continued complete up to the instant of filing the final map with the County Recorder, guaranteeing that the names of all persons whose consent is necessary to pass a clear title to the land being subdivided, and all public easement being offered for dedication, and all acknowledgements thereto, appear on the proper statements and are correctly shown on the map, both as to contents as to the making thereof and affidavits of dedication where necessary.

(h) Certificate of Department of Water Resources, Utility Services Division, Concerning Water Right Dedications. A certificate for execution by the Chief Sanitary Engineer stating that the provisions of Article 422, Water and Sewer Resource Requirements, related to the dedication of water resources have been satisfied.

[Amended by Ord. 876, provisions eff. 7/7/93; Ord. 1088, provisions eff. 1/28/00.]

Section 110.606.65 Recordation. The approved parcel map with the certificates and statements set forth in Section 110.606.60 and the required filing fee advanced by the owner shall be transmitted to the County Recorder by the County Engineer for recording and filing. The land division is complete when the approved parcel map with its required certificates and statements have been filed in the Office of the County Recorder within two (2) years from the date of approval of the tentative map. There shall be no extension of this time period. The recordation time shall be extended as a part of the two (2) year time period set forth in this section should an appeal be filed until the date of the Board of County Commissioners action on the appeal plus an additional ten (10) days.

[Amended by Ord. 876, provisions eff. 7/7/93; Ord. 1041, provisions eff. 12/1/98; Ord. 1088, provisions eff. 1/28/00; Ord. 1156, provisions eff. 3/22/02.]

Section 110.606.70 Expiration Date. Failure of the applicant to record an approved parcel map within two (2) years from the date of approval of the tentative parcel map requires that all proceedings on the parcel map terminate, and a new application shall be required. There shall be no extension of this time frame. The expiration date shall be extended as part of the two (2) year time period set forth in this section should an appeal be filed until the date of the Board of County Commissioners action on the appeal plus an additional ten (10) days.

[Amended by Ord. 876, provisions eff. 7/7/93; Ord. 1041, provisions eff. 12/1/98; Ord. 1088, provisions eff. 1/28/00; Ord. 1156, provisions eff. 3/22/02.]

Section 110.606.75 Waiver of Parcel Map. The requirement for filing a parcel map for minor subdivisions may be waived by the Planning Commission, or an authorized subcommittee of the Planning Commission, if it finds all the following:

(a) Conformity with Laws. That the proposed minor subdivision conforms with Chapter 278 of NRS and this Development Code;

(b) Conformity with Regulations. That the proposed minor subdivision conforms to state and County requirements as to area, improvement and design, and flood water drainage control;

(c) Environmental Effects. That the proposed minor subdivision will not have an adverse effect on the environment;

(d) Conformity with Master Plan. That the proposed minor subdivision conforms to the Washoe County Master Plan, including the area plans and any specific plans adopted by the County;

(e) Change in Nonconformity. That no existing nonconformity with the other divisions in this Development Code will be increased;

(f) Conformity with Other Ordinances. That the proposed minor subdivision conforms with all other County ordinances;

(g) Lack of Need. That unusual circumstances exist so that a parcel map is not necessary to insure proper legal description of property, location of property lines and monumenting of property lines; and

(h) Facilities. That appropriate improved public roads, adequate sanitary disposal facilities, and adequate water supplies are available.

[Amended by Ord. 1041, provisions eff. 12/1/98; Ord. 1088, provisions eff. 1/28/00; Ord. 1447, provisions eff. 9/9/10.]

Section 110.606.80 Document Required if Parcel Map Waived. If the requirement for a parcel map is waived by the Planning Commission or an authorized subcommittee of the Planning Commission, said requirement having been waived within sixty (60) days of the date of the request to waive the tentative map requirement, the applicant shall comply with the provisions of this section.

(a) Document Recordation. The County Surveyor may require the applicant to prepare and record a document which contains:

(1) A legal description of all parts based on a system of rectangular surveys;

(2) A provision for the dedication or reservation of any road right-of-way or easement; and

(3) The approval of the authority which granted the waiver.

(b) Description of Metes and Bounds. The County Surveyor shall require a description of metes and bounds if necessary to describe the parcel division. The description shall be prepared by a professional land surveyor with a signature and stamp.

(c) Waiver. The person preparing the document shall include the following statement:

"This document was prepared from existing information (identifying it and stating where filed and recorded) and the undersigned assumes no responsibility for the existence of monuments or correctness of other information shown on or copied from any prior documents."

(d) Statement Indicating That No Property Taxes Delinquent. A document recorded pursuant to this section shall be accompanied by a written statement by the County Treasurer indicating that all property taxes on the land have been paid pursuant to NRS 278.

[Amended by Ord. 876, provisions eff. 7/7/93; Ord. 1041, provisions eff. 12/1/98; Ord. 1088, provisions eff. 1/28/00; Ord. 1156, provisions eff. 3/22/02.]

[Previous Section 110.606.50 entitled "Planning Commission Action" repealed by Ord. 876, provisions eff. 7/7/93.]

Article 608
TENTATIVE SUBDIVISION MAPS

Sections:

110.608.00	**Purpose**
110.608.05	**Requirement for Application**
110.608.10	**Contents**
110.608.15	**Review Procedures**
110.608.16	**Notice**
110.608.20	**Review Considerations**
110.608.25	**Findings**
110.608.30	**Expiration Date**

Section 110.608.00 Purpose. The purpose of this article, Article 608, Tentative Subdivision Maps, is to prescribe rules and procedures for the regulation and approval of tentative subdivision maps.

Section 110.608.05 Requirement for Application. A tentative subdivision map shall be required for all requests for a subdivision, merger and re-subdivision of existing lots, or a common-interest community consisting of five (5) or more units, as defined in Article 902, Definitions, except for divisions of land into large parcels as defined in Article 612, Divisions of Land into Large Parcels, and except for the creation of a lot or parcel for agriculture purposes that complies with Section 110.602.15.

[Amended by Ord. 876, provisions eff. 7/7/93; Ord. 1088, provisions eff. 1/28/00; Ord. 1364, provisions eff. 4/4/08.]

Section 110.608.10 Contents. Tentative maps shall show the proposed subdivision's design and improvements and conditions existing in and around the subdivision, and shall contain information sufficient to allow the Planning Commission to make the findings required by Section 110.608.25. Tentative maps shall meet all requirements of NRS 278. The following information shall be shown on the tentative map and/or accompanying drawings:

(a) Names and Addresses. Name and address of legal owner, subdivider, and person preparing the map and certificate of registration serial number of the person preparing the map;

(b) Pre-existing Parcels. Pre-existing, contiguous parcels, held under the same ownership, may be merged into a single parcel with a simultaneous re-subdivision of that parcel as proposed in the tentative parcel map.

(c) Legal Description. Sufficient legal description to define the boundary of the proposed subdivision and evidence of ownership of the property to be subdivided;

(d) Subdivision Name. Name of subdivision (not to conflict with existing recorded subdivision maps);

(e) Property Lines. Property lines, approximate distances and bearings;

(f) Contours. Contours at five (5) foot intervals, or where, in the opinion of the County Engineer or the Director of Community Development, topography is a major factor in the subdivision design at two (2) foot contour intervals;

(g) Land Uses. Existing and proposed land uses, existing regulatory zone designations;

(h) Landmarks. Indication of prominent landmarks, areas of unique natural beauty, rock outcroppings, vistas and natural foliage which will be deciding considerations in the design of the subdivision;

(i) Rights-of-Way. The width of right-of-way, proposed name and approximate grade of each highway, street, alley or public way within the proposed subdivision and approximate radius of all curves and diameter of each cul-de-sac;

(j) Numbering Blocks. All blocks shall be numbered and block numbers shall be consecutive and shall begin with the number "one" or the letter "A";

(k) Yards. The yards that are proposed for each lot in the subdivision shall be designated on the map;

(l) Easements. The width, type and approximate locations of all existing or proposed road easements, sight triangles easements that preserve safe sighting at street intersections, slope and curve easements, conservation easements, open space easements, recreation or trail easements, drainage easements, irrigation ditch easements, or public utility easements for water, sewer, gas, electric, telecommunications and franchised community antenna television (where franchised service is permitted) services, whether for public or private purposes;

(m) Public Use Lands. Location and size of any land to be reserved or dedicated for parks, recreation areas, common open space area, schools or other public uses;

(n) Flooding Potential. If any portion of the land within the boundary of the subdivision is subject to inundation or storm water overflow, as shown on the adopted Federal Emergency Management Agency's Flood Boundary and Floodway Maps or as shown by a Nevada registered engineer's hydrologic analysis for the 100-year storm, that fact and the land so affected shall be clearly shown on the map by a prominent note on each sheet;

(o) Flood Elevation. Information indicating the 100-year flood elevation as well as width and direction of flow of each water course within the boundaries of the subdivision;

(p) Septic Tanks. If septic tanks are proposed, consistency with FEMA requirements as set forth in Article 416, Flood Hazards;

(q) Existing Structures. The location and outline of each existing building or structure which is not to be moved in the development;

(r) Vicinity Map. Vicinity map showing the proposed subdivision in relation to the surrounding area;

(s) Dimensions and Acreage of Lots. Dimensions of each lot. Accurate measurements in square feet or acreage of the amount of land utilized in streets, parking, building site, and open space and/or recreation;

(t) Date, North Point and Scale. Date, north point, scale and number of sheet in relation to the total number of sheets;

(u) Snow Storage Areas. Location of snow storage area sufficient to handle snow removed from public and private streets, if applicable;

(v) Potential Hazards. All known potential hazards including, but not limited to, earth slide areas, Holocene era geologic faults, avalanche areas or otherwise hazardous slopes shall be clearly designated on the map;

(w) Master Plan of Storm Drainage. Preliminary master plan of storm drainage system, including pipe sizes, detention/retention/infiltration areas, and the location and magnitude of the ten (10) and one hundred (100) year storm flows entering and leaving the site;

(x) Preliminary Grading Plan. Preliminary grading plan showing areas of phased excavation and fill including the depth of excavation or height of fill from the natural grade, the amounts of material estimated to be excavated and/or used for fill, the destination of excavated material not to be used on site and how it is to be used at its end destination, origin of material to be imported and used for fill, and the location of any temporary material storage site(s);

(y) Soil Erosion and Sediment Control Plan. Preliminary plan for soil erosion and sediment control; and

(z) Phasing Plan. Preliminary plan for the phased recordation of lots, if said phasing is contemplated by the subdivider.

[Amended by Ord. 876, provisions eff. 7/7/93; Ord. 1088, provisions eff. 1/28/00; Ord. 1220, provisions eff. 11/7/03.]

Section 110.608.15 Review Procedures. The review procedures for tentative maps shall be as set forth in this section.

(a) Filing. The subdivider shall file with the Director of the Planning and Development Division a complete application and the required supporting materials as outlined in the application packet.

(b) Review. If the application is found to be complete, the Director of the Planning and Development Division shall transmit one print of each tentative map to the County Engineer, any other public agency which may be affected by the proposed subdivision, and such other persons as the Director of the Planning and Development Division may deem appropriate.

(c) Action Required by the Planning Commission. The Planning Commission shall, within 60 days after receipt of the complete tentative map application by the Director of the Planning and Development Division, conduct a public hearing on the application and following the public hearing, approve, conditionally approve or deny the proposed map; said action being an affirmative vote of a majority of the members of the Planning Commission present at the hearing. At the public hearing, the Planning Commission may relieve the applicant of the requirement to

provide an easement for water, sewer, gas, electric, telecommunications and franchised community antenna television (where permitted to provide service) services if the applicant can demonstrate that there is not an essential nexus to the public purpose for the proposed dedication and the dedication would not be roughly proportional in nature and extent to the impact of the proposed development. Notice of the public hearing conducted by the Planning Commission shall be in accordance with the provisions of this article. Review time may be extended by mutual consent of the Director of the Planning and Development Division and the applicant.

(d) Appeal. The decision of the Planning Commission may be appealed to the Board of County Commissioners in accordance with Section 110.912.20 of the Development Code.

(e) Time Limits. The time limits set forth in this section are suspended for a period, not to exceed one year, during which the State of Nevada or the federal government takes any action to protect the environment or an endangered species which prohibits, stops or delays the processing of a tentative map.

(f) No Guarantee of Final Map Approval. Approval by the Planning Commission or the Board of County Commissioners of a tentative map imposes no obligation on the part of the Planning Commission or the Board of County Commissioners to approve the final map or to accept any public dedication shown on the final map.

[Amended by Ord. 876, provisions eff. 7/7/93; Ord. 899, provisions eff. 5/31/94; Ord. 1041, provisions eff. 12/1/98; Ord. 1156, provisions eff. 3/22/02; Ord. 1220, provisions eff. 11/7/03; Ord. 1555, provisions eff. 5/8/15.]

Section 110.608.16 Notice. Notice shall be given in accordance with the provisions of this section.

(a) Notice of Property Owners by Mail. A notice setting forth the time, place, purpose of hearing, and map or physical description of the land involved shall be sent by mail at least ten (10) days before the meeting to the following persons:

(1) All owners of real property that are the subject of the tentative subdivision map application;

(2) Advisory boards created by the Board of County Commissioners for the area in which the property that is the subject of the tentative subdivision map application is located;

(3) All owners of real property within five hundred (500) feet of the property which is the subject of the tentative subdivision map application;

(4) All tenants of any mobile home or manufactured home park that is located within five hundred (500) feet of the property which is the subject of the tentative subdivision map application; and

(5) All General Improvement Districts (GID) for the area in which the property that is the subject of the tentative subdivision map application is located.

(b) Notice of Property Owners by Electronic Means. If requested by a party pursuant to subsection (a) of this section and if receipt can be verified, an electronic notice

must be provided at least ten (10) days before the meeting, setting forth the time, place, purpose of hearing, and map or physical description of the land involved.

(c) Number of Notices. If the number of notices sent pursuant to this section does not identify thirty (30) or more separate property owners, the County shall send out additional notices to achieve a total of at least thirty (30) separate property owners. These notices shall be sent to owners of real property that are closest to the property in question, not including those owners provided notice pursuant to Subsection (a) of this section.

(d) Compliance with Noticing Requirements. Owners of all real property to be noticed pursuant to this section shall be those owners identified on the latest County Assessor's ownership maps and records. Such notice is complied with when notice is sent to the last known addresses of such real property owners as identified in the latest County Assessor's records. Any person who attends the public hearing shall be considered to be legally noticed unless those persons can provide evidence that they were not notified according to the provisions of this section.

[Added by Ord. 899, provisions eff. 5/31/94. Amended by Ord. 1088, provisions eff. 1/28/00; Ord. 1156, provisions eff. 3/22/02.]

Section 110.608.20 Review Considerations. Prior to approving an application for a tentative map, the Planning Commission or the Board of County Commissioners shall consider:

(a) Environmental and Health Laws. Environmental and health laws and regulations concerning water and air pollution, the disposal of solid waste, facilities to supply water, community or public sewage disposal and, where applicable, individual systems for sewage disposal;

(b) Availability of Water. The availability of water which meets applicable health standards as well as requirements for water rights, quality or will-serve commitments;

(c) Utilities. The availability and accessibility of utilities;

(d) Public Services. The availability and accessibility of public services such as schools, police and fire protection, transportation, recreation and parks;

(e) Plan Consistency. General conformance with the Development Code and the Master Plan;

(f) Impact on Existing Streets. The effect of the proposed subdivision on existing public streets and the need for new streets or highways to serve the subdivision;

(g) Physical Characteristics. Physical characteristics of the land such as flood plain, slope and soil;

(h) Agency Review. The recommendations and comments of the entities reviewing the tentative map; and

(i) Impact on Existing Drainage System. The effect of the proposed subdivision on the existing natural and man-made drainage system.

[Amended by Ord. 876, provisions eff. 7/7/93; Ord. 1447, provisions eff. 9/9/10.]

Section 110.608.25 Findings. Prior to approving an application for a tentative map, the Planning Commission shall find that all of the following are true:

(a) Plan Consistency. That the proposed map is consistent with the Master Plan and any specific plan;

(b) Design or Improvement. That the design or improvement of the proposed subdivision is consistent with the Master Plan and any specific plan;

(c) Type of Development. That the site is physically suited for the type of development proposed;

(d) Availability of Services. That the subdivision will meet the requirements of Article 702, Adequate Public Facilities Management System;

(e) Fish or Wildlife. That neither the design of the subdivision nor any proposed improvements is likely to cause substantial environmental damage, or substantial and avoidable injury to any endangered plant, wildlife or their habitat;

(f) Public Health. That the design of the subdivision or type of improvement is not likely to cause significant public health problems;

(g) Easements. That the design of the subdivision or the type of improvements will not conflict with easements acquired by the public at large for access through, or use of property within, the proposed subdivision;

(h) Access. That the design of the subdivision provides any necessary access to surrounding, adjacent lands and provides appropriate secondary access for emergency vehicles;

(i) Dedications. That any land or improvements to be dedicated to the County is consistent with the Master Plan; and

(j) Energy. That the design of the subdivision provides, to the extent feasible, for future passive or natural heating or cooling opportunities in the subdivision.

[Amended by Ord. 1447, provisions eff. 9/9/10.]

Section 110.608.30 Expiration Date. If the subdivider fails to record a final map for any portion of the tentative map within the time required by NRS 278, all proceedings are terminated and a new application is required. The Planning Commission may grant extensions as allowed by NRS.

[Amended by Ord. 876, provisions eff. 7/7/93.]

Article 610
FINAL SUBDIVISION MAPS

Sections:

110.610.00	**Purpose**
110.610.05	**Requirement of Final Map**
110.610.10	**Form**
110.610.15	**Contents**
110.610.20	**Required Certificates and Statements**
110.610.25	**Dedication of Facilities and Water Rights**
110.610.30	**Improvements at the Expense of the Subdivider**
110.610.35	**Provision of CATV**
110.610.40	**Guarantee of Completion**
110.610.45	**Preliminary Submittal**
110.610.50	**Approval by the Director of Community Development**

Section 110.610.00 Purpose. The purpose of this article, Article 610, Final Subdivision Maps, is to control the practices and procedures regarding the preparation and approval of final subdivision maps.

Section 110.610.05 Requirement of Final Map. A subdivider shall prepare a final map, in accordance with the tentative map, for the entire area for which a tentative map has been approved, or a series of final maps, each covering a portion of the approved tentative map.

Section 110.610.10 Form. The final map shall be clearly and legibly drawn in permanent black ink upon good tracing cloth or produced by the use of other materials of a permanent nature generally used for such purpose in the engineering profession, but affidavits, certificates and acknowledgement must be legibly stamped or printed upon the map with opaque ink. The size of each sheet shall be twenty-four (24) by thirty-two (32) inches. A marginal line must be drawn completely around each sheet, leaving an entirely blank margin of one (1) inch at the top, bottom and right edges, and of two (2) inches at the left edge along the twenty-four (24) inch dimension.

Section 110.610.15 Contents. Every final map shall show all data required for the tentative map except contour lines, position of buildings and prominent landmarks, relationship to streets and highways beyond the area shown on the map and the proposed use of lots, and shall contain the following additional data:

(a) Street Monuments. Where the centerline has been established for any street, highway, alley or public way within an adjoining subdivision, all monuments along such street, highway, alley or public way within the proposed subdivision shall be located with reference to that centerline which is shown on the map;

(b) Centerlines. The centerline of each highway, street, alley or public way within the proposed subdivision and the width on each side of the centerline and the width to be dedicated. There shall also appear the bearing, length of tangent, radius and central angle, and length of each curve for all centerlines;

(c) Monuments. The location and description of monuments or other evidence formed upon the ground and used in determining the boundaries of the subdivision. If other subdivisions adjoin, the map shall show sufficient corners of such subdivisions sufficiently identified to locate precisely the limits of the proposed subdivision;

(d) Block, Lot and Boundary Lines. The length and bearing of each block line, lot line and boundary line; the length, radius and central angle of each curve or the length of the curve and that portion of the central angle lying within each lot. Such data shall be shown in a manner satisfactory to the County Engineer;

(e) Flooding Potential. If any portion of the land within the boundaries of a final map is subject to inundation or storm water overflow, as shown on the adopted Federal Emergency Management Agency's Flood Boundary and Floodway Maps or as shown by a Nevada registered engineer's hydrologic analysis for the 100-year storm, that fact and the land so affected shall be clearly shown on the final map by a prominent note on each sheet;

(f) Seismic Hazard. If any portion of land within the boundaries of a final map is bisected by a post-Holocene era fault line, any such fault line shall be clearly shown on the final map and a prominent note shall indicate the fact the fault line exists and that any habitable structure shall be set back a minimum of ten (10) feet from the fault line;

(g) Lot and Total Area. The area of each lot and total area of the land in the subdivision. If the area is two (2) acres or more, the area shall be to the nearest one-hundredth of an acre. If the area is less than two (2) acres, it shall be in square feet;

(h) Easements. All easements approved on the tentative subdivision map; and

(i) Phasing Plan. The phasing plan for the recordation of lots as approved by the Planning Commission or Board of County Commissioners.

[Amended by Ord. 876, provisions eff. 7/7/93.]

Section 110.610.20 Required Certificates and Statements. Language shall be provided on the final map that satisfies the intent of the following certificates. Other certificates and statements may be required in addition to those enumerated in this section. Final subdivision maps which have been approved for recordation prior to July 31, 1993, but which have not been recorded, shall not be required to comply with this section.

(a) Certificate of Owner. A certificate signed and acknowledged by all persons having any record title in the land subdivided, evidencing their grant of permanent easements for utility installations and access, as designated on the map.

(b) Certificate of Professional Land Surveyor. A certificate of the surveyor responsible for the survey. The certificate must be in the following form:

SURVEYOR'S CERTIFICATE

I, ... (Name of Surveyor), a Professional Land Surveyor registered in the State of Nevada, certify that:

1. This plat represents the results of a survey conducted under my direct supervision at the instance of ..... (Owner, Trustee, Etc.)

2. The lands surveyed lie within .....
(Section, Township, Range, Meridian and, if required by the governing body, a description by metes and bounds for any subdivision which is divided into lots containing 5 acres in area or less),
and the survey was completed on ..... (Date)

3. This plat complies with the applicable state statutes and any local ordinances in effect on the date that the governing body gave its final approval.

4. The monuments depicted on the plat are of the character shown, occupy the positions indicated and are of sufficient number and durability.

(OR)

4. The monuments depicted on the plat will be of the character shown and occupy the positions indicated by ..... (A day certain) and an appropriate financial guarantee will be posted with the governing body before recordation to assure the installation of the monuments.

..... Registration Number and Seal:
(Name of Surveyor)

(c) County Engineer or Surveyor Certificate. A certificate by the County Engineer or the County Surveyor stating that he or she has examined the final map; and that the map is technically correct and that if the monuments have not been set, that a proper performance bond has been deposited guaranteeing their setting on or before a day certain.

(d) District Board of Health Certificate. A certificate by the local District Board of Health indicating that the final map is approved concerning sewage disposal, water pollution, water quality and water supply facilities.

(e) Division of Water Resources Certificate. A certificate by the Division of Water Resources of the State Department of Conservation and Natural Resources, showing that the final map is approved concerning water supply.

(f) Certificate of Director of Community Development. A certificate by the Director of Community Development stating that the final map was approved.

(g) Statement from the County Treasurer. A statement from the County Treasurer indicating that all property taxes on the land have been paid for the period identified in NRS 278.

(h) Guarantee of Title. A subdivision guarantee of title, in a form acceptable to the County Engineer and the District Attorney, issued by a competent title company for the benefit and protection of the County. Said guarantee of title shall be continued complete up to the instant of filing the final map with the County Recorder, guaranteeing that the names of all persons whose consent is necessary to pass a clear title to the land being subdivided; the fact there are no encumbrances, liens, delinquent taxes or assessments; and all public easements being offered for dedication, and all acknowledgements thereto, appear on the proper statements and are correctly shown on the map, both as to contents as to the making thereof and affidavits of dedication where necessary. Said guarantee of title also shall guarantee that there are no encumbrances, liens, delinquent taxes or assessments on the property.

(i) Utility Companies' Certificate. A certificate by the appropriate public utility and (CATV) television companies that the shown utility easements have been checked and approved.

(j) Certificate of the Department of Water Resources, Utility Services Division, Concerning Water Right Dedications. A certificate for execution by the Chief Sanitary Engineer stating that the provisions of Article 422, Water and Sewer Resource Requirements, related to the dedication of water resources have been satisfied.

(k) Certificate of Director of Community Development or Board of County Commissioners. A certificate for execution by the Director of Community Development, or Board of County Commissioners if the tentative map was approved by that body, stating that the map conforms to all of the requirements of NRS 278.010 to NRS 278.630, inclusive, and any applicable Washoe County Code provisions; and accepting or rejecting any or all offers of dedications offered to Washoe County by the subdivider. If the final map includes a merger of pre-existing lots and the re-subdivision of those lots, the certificate shall acknowledge that any public streets, easements or utility easements that will not remain were abandoned pursuant to Article 806.

[Amended by Ord. 876, provisions eff. 7/7/93; Ord. 1041 provisions eff. 12/1/98; Ord. 1088, provisions eff. 1/28/00.]

Section 110.610.25 Dedications of Facilities and Water Rights. In addition to any land which is required to be dedicated pursuant to this Development Code, a subdivider shall be required to offer for dedication those facilities and water rights prescribed in this section prior to final map approval. The form of the offer of dedication shall be to the satisfaction of the Water Resources Department.

(a) Acceptance of Dedication. The Department of Water Resources may accept a dedication pursuant to this section in a form acceptable to that department when the department has determined that the facilities conform to the requirements of this section and perform as designed.

[Amended by Ord. 876, provisions eff. 7/7/93.]

Section 110.610.30 Improvements at the Expense of the Subdivider. The subdivider shall make the improvements prescribed in this section at his own expense.

(a) Required Improvements. The subdivider shall improve at his own expense, within a stated time, all land dedicated on a final map for streets, highways, public ways and easement(s) with such improvements as the Planning Commission or Board of County Commissioners may determine to be necessary for the general use of lot owners in the subdivision and local neighborhood traffic, water distribution, sanitary sewer and drainage needs.

(b) Utility Distribution System. The subdivider shall provide for utility distribution service and facilities to service each lot of a subdivision including gas, water, electricity and communication. The subdivider shall make the necessary arrangements with the utility company or companies involved for the installation of the facilities in accordance with such applicable tariffs, rules and regulations of the companies as may be on file with the Public Services Commission of the State of Nevada and in accordance with any pertinent franchise arrangements, agreements or contracts.

(c) Improvements Not Normally Required. Storm drain trunk lines, channels for general flood control purposes, improvements not solely for the benefit of the subdivision and full improvement of those routes shown on the Streets and Highways System Plan map for each of the area plans included within the Master Plan are not required by this section, unless agreed to by the subdivider.

(d) Street Lighting. Street lighting installation is the financial responsibility of the subdivider. The subdivider shall make all necessary arrangements with the utility company involved for the installation of such street lights as are approved and required by the County Engineer.

(e) Street Improvement Standards. All street improvements shall be graded, drained and surfaced in accordance with improvement plans approved by the County Engineer. All streets shall be surfaced with asphaltic concrete paving meeting the requirements of the Standard Specifications for Public Works Construction sponsored by Washoe County and be designed in accordance with the most recently adopted Washoe County Structural Pavement Section Design Manual unless an alternative method of street surfacing is approved by the Board of County Commissioners at the time of approval of the tentative subdivision map.

(f) Ditch or Watercourse Hazard. Where any ditch or natural watercourse constitutes or creates a hazard, whether within or contiguous to a development, the subdivider shall provide and install a six (6) foot chain link or equivalent fence, the location and construction of which shall be approved by the County Engineer.

[Amended by Ord. 876, provisions eff. 7/7/93; Ord. 1447, provisions eff. 9/9/10.]

Section 110.610.35 Provision of CATV. The subdivider shall provide for the installation of community antenna television (CATV) as prescribed in this section.

(a) Installation. The subdivider shall provide, at his own expense, for the installation of community antenna television (CATV) cable conduit and pull wire to serve each dwelling in the subdivision. The installation of the conduit and pull wire must be accomplished as follows:

(1) If a single CATV franchise exists to serve that area in which the subdivision is located, the subdivider shall install the conduit and pull wire in a manner which is compatible with and meets the standards of the franchise;

(2) If more than one CATV franchise exists to serve the area in which the subdivision is located, the subdivider shall select from among the franchisees and shall install the conduit and pull wire in a manner which is compatible with and meets the standards of the franchisee selected; or

(3) If no CATV franchise exists to serve the area in which the subdivision is located, the subdivider shall determine which CATV franchisee is closest geographically to the subdivision and shall install the conduit and pull wire in a manner which is compatible with and meets the standards of that franchisee.

(b) Dedication. Upon completion of installation, ownership of the CATV cable conduit and pull wire shall be determined as follows:

(1) If the subdivider applies to the Board of County Commissioners for a franchise to operate and actually operates a CATV system within the subdivision, the conduit and pull wire remain the property of the subdivider until such time as he determines not to operate or is unable to operate the system. At that time, the subdivider shall immediately offer for dedication all CATV cable, conduit and other appurtenant equipment he has installed to the franchisee; or

(2) If the subdivider does not operate a CATV system within the subdivision, he shall dedicate the conduit and pull wire to the franchisee immediately upon completion of installation.

(c) Waiver/Modification. The Director of Community Development may recommend, and the Board of County Commissioners may grant, a waiver or modification of Subsection (a) if geographic, economic or other conditions make installation of CATV conduit and pull wire unreasonable or impractical. It is the responsibility of the subdivider to demonstrate, through adequate factual evidence, that the installation requirement is unreasonable or impractical.

[Amended by Ord. 1041, provisions eff. 12/1/98.]

Section 110.610.40 Guarantee of Completion. Each agreement made by the subdivider shall be accompanied by a faithful performance bond or other satisfactory guarantee of completion insuring the faithful performance of all work. The penal sum of the bond shall be in a sum which in the opinion of the County Engineer equals the cost, plus a contingency amount, of the improvements to which the subdivider has agreed. If any subdivider fails to complete any improvement as agreed within the time specified, the Board of County Commissioners may cause the bond to be forfeited in the amount necessary to finish the uncompleted portion of the work. If a security was previously posted to guarantee completion of improvements for two or more contiguous parcels and those improvements will not be completed because of a merger and subsequent re-subdivision pursuant to this article, a credit on a pro-rata basis of the security posted by the owner shall be credited toward the financial assurance required for the map re-subdivision.

[Amended by Ord. 1088, provisions eff. 1/28/00.]

Section 110.610.45 Preliminary Submittal. The Preliminary Submittal procedures for the final map shall be as set forth in this section.

(a) Submittal Requirements. Not less than sixty (60) days prior to the filing of any final map with the Department of Community Development, the subdivider shall submit to the County Engineer:

(1) Three (3) prints of the proposed final map accompanied by the map checking fee;

(2) Data concerning closure calculations, constructions plans, estimates of quantities and the like, if the situation warrants;

(3) Plans and specifications for subdivision street improvements;

(4) Plans, profiles, specifications and necessary details of the proposed construction for streets, curb and gutter, water mains, culverts, bridges, sanitary sewers or storm drains which are to be installed as part of the subdivision; and

(5) Faithful performance bond estimate prepared by a Nevada registered engineer.

(b) Review by County Engineer or County Surveyor. The County Engineer or County Surveyor shall check the map as to accuracy of dimensions, placing of monuments, establishment of survey records shown thereon and conformance of the final map with the tentative map approved by the Planning Commission or Board of County Commissioners. The County Engineer shall review the plans, specifications and bond estimates for the subdivision improvements for conformance with the tentative map conditions and Washoe County standards. The subdivider shall make corrections and/or additions until acceptable to the County Engineer or County Surveyor.

(c) Inspection Costs. Prior to commencing any work, the subdivider shall deposit with the County Engineer a sum which the County Engineer estimates to be necessary to cover the inspection costs of all improvements under his jurisdiction.

(d) Subdivision Improvement Agreement. Prior to approval of the final map by the County Engineer, a subdivision improvement agreement shall be submitted to the County Engineer.

(e) Faithful Performance Guarantee. Prior to approval of the final map by the County Engineer, a bond or other form of faithful performance guarantee shall be submitted to the County Engineer.

(f) Review by the Department of Community Development. The County Engineer, following his review and approval, shall transmit the map to the Department of Community Development for their review. The subdivider shall make corrections and/or additions until acceptable to the Department of Community Development.

[Amended by Ord. 876, provisions eff. 7/7/93; Ord. 1041, provisions eff. 12/1/98.]

Section 110.610.50 Approval by the Director of Community Development. The approval procedures for final maps shall be as set forth in this section.

(a) Submittal. The subdivider shall submit to the Department of Community Development the original tracing of the map and any duplicates per County requirements, corrected to its final form and signed by all parties required to execute the statement on the map. Original signatures shall appear on the original drawing. The original tracing and any duplicates shall be forwarded to the County Engineer for a final review.

(b) Approval. Upon notification by the County Engineer that the final map is correct and upon receipt of all required certificates and submittals, the Director of Community Development shall, before the expiration date of the tentative map, approve the map if it conforms to all the requirements of NRS 278 and the provisions of this Development Code. This approval shall include acceptance of financial assurances, subdivision agreements and offers of dedication. Upon approval by the Director of Community Development, the map shall be returned to the County Engineer for recording as soon as practicable in the Office of the County Recorder. The date of the signing of the final map by the Director of Community Development shall constitute the date of presentation of the final map for purposes of NRS 278.

(c) Time Limits. The time limits set forth in this section are suspended for the following circumstances:

(1) The time limits set forth in this section are suspended for a period, not to exceed one (1) year, during which the State of Nevada or the federal government takes any action to protect the environment or an endangered species which prohibits, stops or delays the development, processing or recordation of a final map.

(2) The time limit for recording a final map is extended to ten (10) days after the date of a hearing by the Board of County Commissioners of an appeal of a decision by the Director of Community Development.

(3) The time limit for recording a final map is suspended for that period of time between the issuance of a court order halting any further action by the subdivider or the County and the time that the court vacates that order.

(d) Water Meters. The Director of Community Development shall not approve any final maps for a subdivision served by a public water system, unless the subdivider has submitted plans which provide for the installation of water meters or other device which will measure water delivered to each water user in the subdivision.

(e) Fees. Fees applicable to final maps shall be as established by the Board of County Commissioners through separate ordinance.

(f) Appeal. A decision of the Director of Community Development to deny or add additional requirements to a final map may be appealed to the Board of County Commissioners within ten (10) days after action of the Director of Community Development by submitting the appropriate form and fee to the Department of Community Development.

(1) The Department of Community Development shall schedule an appeal hearing before the Board of County Commissioners within thirty (30) days of the submittal of a complete appeal form and fees.

(2) The Board of County Commissioners may approve or deny the recordation of the final map within sixty (60) days of the filing of the appeal with the Department of Community Development. The action shall be by an affirmative vote of a majority of the full membership of the Board of County Commissioners. In the case of a tie due to the absence of a member, the appeal hearing shall be continued to a future meeting unless requested otherwise by the appellant. Final action by the Board of County Commissioners is considered final for the purposes of judicial review.

[Amended by Ord. 876, provisions eff. 7/7/93; Ord. 899, provisions eff. 5/31/94; renamed from "Approval by the Planning Commission" and amended by Ord. 1041, provisions eff. 12/1/98; Ord. 1156, provisions eff. 3/22/02.]

Article 612
DIVISION OF LAND INTO LARGE PARCELS

Sections:

110.612.00	**Purpose**
110.612.05	**Requirement for Application**
110.612.10	**Contents of Tentative Map**
110.612.15	**Waiver of Requirement to File Tentative Map**
110.612.20	**Review Procedures for Tentative Map**
110.612.25	**Water Rights**
110.612.30	**Requirement for a Final Map**
110.612.35	**Contents of Final Map**
110.612.40	**Review Procedures for a Final Map**
110.612.45	**Recordation**

Section 110.612.00 Purpose. The purpose of the article, Article 612, Division of Land into Large Parcels, is to prescribe rules and procedures for the regulation and approval of tentative and final maps for the division of land into large parcels.

Section 110.612.05 Requirement for Application. This article applies to division of land or the merger and re-subdivision of existing parcels if each proposed lot is forty (40) acres or larger in area, including roads and easements, or at least one-sixteenth (1/16) of a section as described by a government land office. This article does not apply to the creation of a parcel for agriculture purposes that complies with Section 110.602.15.

[Amended by Ord. 1088, provisions eff. 1/28/00; Ord. 1364, provisions eff. 4/4/08.]

Section 110.612.10 Contents of Tentative Map. Tentative maps submitted pursuant to this section shall be prepared and certified by a professional land surveyor. The tentative maps shall be entitled "Tentative Map of Division into Large Parcels". The following information shall be shown on the tentative map:

(a) The approximate, calculated or actual acreage of each lot and the total acreage of the land to be divided;

(b) Pre-existing, contiguous parcels, held under the same ownership, may be merged into a single parcel with a simultaneous re-subdivision of that parcel as proposed in the tentative parcel map.

(c) All roads or easements of access which exist, are proposed in the applicable master plan or are proposed by the person who intends to divide the land;

(d) Any easements for public utilities for water, sewer, gas, electric, telecommunications and franchised community antenna television (where franchised service is permitted) services which exist or which are proposed;

(e) The location of any existing road or easement which the owner does not intend to dedicate;

(f) The name and address of the owner of the land; and

(g) The regulatory zone of the land for which the map has been submitted and all surrounding properties.

[Amended by Ord. 876, provisions eff. 7/7/93; Ord. 1088, provisions eff. 1/28/00; Ord. 1220, provisions eff. 11/7/03.]

Section 110.612.15 Waiver of Requirement to File Tentative Map. The Director of Community Development may waive the requirement of filing the tentative map.

[Amended by Ord. 1041, provisions eff. 12/1/98.]

Section 110.612.20 Review Procedures for Tentative Map. The review procedures for tentative maps shall be as set forth in this section:

(a) Filing. The subdivider shall submit an application to the Department of Community Development for action by the Director of Community Development.

(b) Review. The Community Development staff shall review the submitted packet and accept or reject the application as complete within five (5) working days from the date of application.

(c) Action Required by the Director of Community Development. The Director of Community Development shall, within sixty (60) days after the tentative map application has been filed, approve, conditionally approve or deny the tentative map. The Director of Community Development may, within sixty (60) days but not after the expiration of the sixty (60) day period, designate the location and width of any easements for roads and public utilities as shown on the master plan if there is one applicable to the area to be divided, or designate the location and width of any easements for roads and public utilities which may be reasonably necessary to serve the area to be divided if there is no master plan. The Director of Community Development shall make the following findings when approving the tentative map:

(i) Existing easements have been retained or, if relocated, are to the satisfaction of the person to whom the easement benefits; new easements have been provided that accommodate needed public utilities; or the requirement for certain easements have been waived because there is not an essential nexus to the public purpose for the proposed dedication and the dedication would not be roughly proportional in nature and extent to the impact of the proposed development.

(ii) Access to the property has been identified and is suitable to the passage of an emergency vehicle.

(iii) Water resources sufficient to support the additional development have been identified.

[Amended by Ord. 876, provisions eff. 7/7/93; Ord. 1041, provisions eff. 12/1/98; Ord. 1220, provisions eff. 11/7/03.]

Section 110.612.25 Water Rights. Prior to final map approval, the subdivider shall be required to dedicate to Washoe County any water rights necessary to insure an adequate water supply to the lots proposed through the tentative map. The amount of water rights necessary shall be determined through the application of written criteria and approved by the Board of County Commissioners.

[Amended by Ord. 876, provisions eff. 7/7/93.]

Section 110.612.30 Requirement for a Final Map. The requirements for final maps shall be as set forth in this section:

(a) Filing of Final Map. A final map shall be filed with the Department of Community Development within one (1) year of the date of submitting an application to the department for a tentative map.

(b) Survey Requirements. The final map shall be prepared by a professional land surveyor. The final map shall be based upon an actual survey by the preparer and show the date of the survey or based upon the most recent government survey and show the date of approval of the government survey and contain a certificate by the preparer that the parcels contain the number of acres shown for each parcel.

(c) Form. The final map shall be clearly and legibly drawn in black waterproof ink upon good tracing cloth or produced by the use of other materials of a permanent nature generally used for this purpose in the engineering profession, but affidavits, certificates and acknowledgments must be legibly stamped or printed upon the map with permanent black ink. The final map shall be twenty-four (24) by thirty-two (32) inches in size with a marginal line drawn completely around each sheet, leaving an entirely blank margin of one (1) inch at the top, bottom and right edges, and of two (2) inches at the left edge along the twenty-four (24) inch dimension. The final map shall be of a scale large enough to show clearly all details.

[Amended by Ord. 1041, provisions eff. 12/1/98; Ord. 1088, provisions eff. 1/28/00; Ord. 1156, provisions eff. 3/22/02.]

Section 110.612.35 Contents of Final Map. The following information shall be shown and defined on the final map:

(a) The particular number of the sheet and the total number of sheets comprising the map shall be stated on each of the sheets, and its relation to each adjoining sheet must be clearly shown;

(b) All lots approved through the tentative map shall be identified numerically and state actual acreage of each lot;

(c) All roads or easements of access which exist and which the owner intends to offer for dedication, all roads or easements of access which are shown on the applicable master plan and all roads or easements of access which are specially required by the Director of Community Development;

(d) The title "Map of Division into Large Parcels";

(e) Any easements for public utilities which exist or are proposed; and

(f) Any existing easements for irrigation or drainage, and normally continuously flowing watercourses.

[Amended by Ord. 876, provisions eff. 7/7/93; Ord. 1041, provisions eff. 12/1/98; Ord. 1088, provisions eff. 1/28/00.]

Section 110.612.40 Review Procedures for a Final Map. The review procedures for final maps shall be as set forth in this section.

(a) Filing. After the Director of Community Development has approved the tentative map or waived the requirement for its filing or sixty (60) days after the date of its filing, whichever is sooner, the subdivider, upon fulfillment of any condition of approval, may file a final map of the division with the Department of Community Development. The map shall be filed with the Department of Community Development no later than one (1) year after the tentative map was first filed with the Department of Community Development or that the requirement for its filing was waived.

(b) Action Required by Director of Community Development. The Director of Community Development must approve or disapprove the final map within sixty (60) days of its filing. If the map is disapproved, the Director of Community Development shall return the map to the subdivider with the reason for the action and a statement of what changes would be necessary to render the map acceptable. If the Director of Community Development neither approves nor disapproves the map within sixty (60) days, the map shall be deemed approved unconditionally.

(c) Review Criteria. Prior to approving a final parcel map, the Director of Community Development shall determine that the following have been met:

(1) Completion of all conditions imposed on the subdivision prior to approval of the final map, or in the alternative, acceptance by the Director of Community Development of a satisfactory guarantee of completion and faithful performance of all conditions. The amount of the guarantee shall be in a sum which, in the opinion of the County Engineer, equals one hundred twenty (120) percent of the cost of performance of the conditions. If a subdivider fails to perform any condition within the time specified, the Board of County Commissioners, upon recommendation of the County Engineer, may cause the guarantee to be forfeited in an amount necessary to finish the uncompleted portion of the work. If a security was previously posted to guarantee completion of improvements for two (2) or more contiguous parcels and those improvements will not be completed because of a merger and subsequent re-subdivision pursuant to this article, a credit on a pro-rata basis of the security posted by the owner shall be credited toward the financial assurance required for the parcel map re-subdivision.

(2) Completion of all certificates and statements required by Section 110.612.45, excepting (a) of that section.

(d) Appeals. The decision of the Director of Community Development on the tentative or final map may be appealed to the Board of County Commissioners within ten (10) days after issuance of the decision. An appeal is initiated by submitting the appropriate form and fee to the Department of Community Development. Appeals of any Director of Community Development decision shall be scheduled before the Board of County Commissioners within thirty (30) days of receiving the appeal. The Board of County Commissioners shall render its final decision within sixty (60) days of the filing of the appeal. The Board of County Commissioners' decision shall be by an affirmative vote of a majority of the full membership of the Board. In the case of a tie due to the absence of a member, the appeal shall be continued to a future meeting unless requested otherwise by the appellant. The final action by the Board of County Commissioners shall be considered final for the purposes of judicial review.

Section 110.612.50 entitled "Approval by Planning Commission" amended by Ord. 876, provisions eff. 7/7/93; renamed to "Approval by the Director of Community Development" and amended by Ord 1041, provisions eff. 12/1/98; renumbered and renamed to Section 110.612.40 "Review Procedures for a Final Map" and amended by Ord. 1088, provisions eff. 1/28/00. Amended by Ord. 1156, provisions eff. 3/22/02.]

Section 110.612.45 Recordation. Upon approval, the final map shall be filed with the County Recorder. The map filed with the County Recorder shall include:

(a) A certificate signed and acknowledged by the owner of the land consenting to the preparation and recording of the map and the granting of necessary access, drainage and public utility easements. If the final parcel map includes a merger of pre-existing lots and the re-subdivision of those lots, the certificate shall acknowledge that any public streets, easements or utility easements that will not remain were abandoned pursuant to Article 806.

(b) A certificate signed by the Director of Community Development that the map was approved, or the affidavit of the person presenting the map for filing that the time specified by Section 110.612.40 for action by the Director of Community Development has expired.

(c) A written statement signed by the Treasurer of Washoe County that no property taxes on the land are delinquent and all taxes have been paid pursuant to NRS 278.

(d) A certificate by the surveyor who prepared the map acknowledging that the map was prepared by him or under his supervision.

[Amended by Ord. 876, provisions eff. 7/7/93; Ord. 1041, provisions eff. 12/1/98; Ord. 1088, provisions eff. 1/28/00.]

[Section 110.612.35 entitled "Survey Requirements" repealed by Ord. 1088, provisions eff. 1/28/00. Section 110.612.40 entitled "Forms" amended by Ord. 876, provisions eff. 7/7/93 and repealed by Ord. 1088, provisions eff. 1/28/00. Section 110.612.55 entitled "Appeals" amended by Ord. 876, provisions eff. 7/7/93; Ord. 899, provisions eff 5/31/94; Ord. 1041, provisions eff. 12/1/98 and repealed by Ord. 1088, provisions eff. 1/28/00.]

Article 614
REVERSION TO ACREAGE

[This Article amended in its entirety by Ord. 876, provisions eff. 7/7/93; Ord. 899, provisions eff. 5/31/94; Ord. 1041, provisions eff. 12/1/98; Ord. 1088, provisions eff. 1/28/00.]

Sections:

110.614.00	**Purpose**
110.614.05	**Initiation**
110.614.10	**General Contents**
110.614.15	**Review and Approval Process**
110.614.20	**Certificates**
110.614.25	**Materials**
110.614.30	**Size**
110.614.35	**Scale**
110.614.40	**Numbering**
110.614.45	**Applicability of Other Provisions**
110.614.50	**Recordation**

Section 110.614.00 Purpose. The purpose of this article, Article 614, Reversion to Acreage, is to prescribe the procedures that are required to abandon all or part of a subdivision map, including a series of maps that were recorded for an approved tentative map and which maps are contiguous as defined by NRS 278.490, except for the provisions of Section 110.614.45.

Section 110.614.05 Initiation. A written application to revert or abandon any subdivision map, parcel map, map of division into large parcels, or part thereof to acreage or to abandon the map or portion thereof may be initiated by the owner of the land, Planning Commission, or Board of County Commissioners.

Section 110.614.10 General Contents. The application shall be accompanied by a map of the proposed abandonment or reversion and shall describe the requested changes.

Section 110.614.15 Review and Approval Process. The application shall be reviewed and approved by the County Surveyor.

Section 110.614.20 Certificates. The map shall contain the appropriate certificates and statements required by Article 610, Final Subdivision Maps, for the original division of the land. In addition, the map shall contain a certificate for execution by the County Surveyor stating that the County Surveyor approved the map.

Section 110.614.25 Materials. The final map shall be clearly and legibly drawn in permanent black ink upon good tracing cloth or produced by the use of other materials of a permanent nature generally used for such a purpose in the engineering profession, but affidavits, certificates and acknowledgements shall be legibly stamped or printed upon the map with permanent black ink.

Section 110.614.30 Size. The size of each sheet of the map shall be twenty-four (24) by thirty-two (32) inches. A marginal line shall be drawn completely around each sheet, leaving an entirely

blank margin of one (1) inch at the top, bottom and right edges, and of two (2) inches at the left edge along the twenty-four (24) inch dimension.

Section 110.614.35 Scale. The scale of the map shall be large enough to show all details clearly and enough sheets shall be used to accomplish this end.

Section 110.614.40 Numbering. The particular number of the sheet and the total number of sheets comprising the map shall be stated on each of the sheets and its relation to each adjoining sheet shall be clearly shown.

Section 110.614.45 Applicability of Other Provisions. Except for the provisions of this article, no other provision of the Development Code applies to a map made solely for the purpose of abandonment of a former map. Two or more contiguous parcels may merge and re-subdivide into new parcels or lots without a Reversion to Acreage of the pre-existing parcels when the recordation of the map is in compliance with the procedures outlined in Division Six, Subdivision Requirements.

Section 110.614.50 Recordation. Upon approval of the map of reversion or abandonment, it shall be recorded by the County Engineer in the Office of the County Recorder. The County Recorder shall make a written notation of the approval on each sheet of the previously recorded map affected by the later recording, if the County Recorder does not maintain a cumulative index for such maps and amendments. If such an index is maintained, the County Recorder shall direct an appropriate entry for the amendment.

Article 616
AMENDMENTS OF MAP

[This Article amended in its entirety by Ord. 876, provisions eff. 7/7/93; Ord. 899, provisions eff. 5/31/94; Ord. 1041, provisions eff. 12/1/98.]

Sections:

110.616.00	**Purpose**
110.616.05	**Approval Process**
110.616.10	**Minor Amendment: Applicability**
110.616.15	**Minor Amendment: Preparation of Certificate**
110.616.20	**Minor Amendment: Contents of Certificate**
110.616.25	**Minor Amendment: Recordation of Certificate**
110.616.30	**Major Amendment: Applicability**
110.616.35	**Major Amendment: Standards**
110.616.40	**Major Amendment: Recordation**

Section 110.616.00 Purpose. The purpose of this article, Article 616, Amendments of Map, is to prescribe the procedures that are required to amend any final subdivision map.

Section 110.616.05 Approval Process. A minor map amendment, as described in Section 110.616.10, may be approved by the County Engineer. A major map amendment, as described in Section 110.616.30, shall be approved by the Planning Commission.

Section 110.616.10 Minor Amendment: Applicability. If an error or omission is found in any subdivision map, record of survey, parcel map, map of division into large parcels, or reversionary map and the correction does not change or purport to change the physical location of any survey monument or property line, the County Engineer or Planning Commission may cause a certificate of amendment to be filed and recorded.

Section 110.616.15 Minor Amendment: Preparation of Certificate. The surveyor who made the survey shall prepare and record the certificate within ninety (90) days after notification by the County Engineer or Planning Commission. If the surveyor is no longer professionally active in the County, the County Engineer or a professional land surveyor appointed by the Planning Commission shall prepare the certificate.

Section 110.616.20 Minor Amendment: Contents of Certificate. The certificate of amendment shall comply with the following:

(a) Be in the form of a letter addressed to the County Surveyor or the Planning Commission;

(b) Specify the title and recording date of the document being amended;

(c) Concisely state the data being amended and the correction or omission;

(d) Be dated, signed and sealed by the surveyor preparing the certificate; and

(e) Contain the following statement, dated and signed by the County Surveyor or a professional land surveyor appointed by the Planning Commission:

"I hereby certify that I have examined the certificate of amendment and that the changes to the original document specified therein are provided for in applicable sections of NRS 278, NRS 625, and local ordinances adopted pursuant thereto, and I am satisfied that this certificate of amendment so amends the document as to make it technically correct."

Section 110.616.25 Minor Amendment: Recordation of Certificate. Upon the recording of a certificate of amendment, the County Recorder shall cause a proper notation to be entered upon all recorded sheets of the original document being amended, if the County Recorder does not maintain a cumulative index for such maps and amendments. If such an index is maintained, the County Recorder shall direct an appropriate entry for the amendment.

Section 110.616.30 Major Amendment: Applicability. If an error or omission is found in any recorded subdivision plat, record of survey, parcel map, map of division into large parcels, or reversionary map, and the correction changes or purports to change the physical location of any survey monument, property line or boundary line, the Planning Commission may cause an amended plat, survey or map to be filed and recorded.

(a) Parcel Map. If the proposed amendment is to a parcel map, map of division into large parcels, or record of survey, the same procedures and requirements apply as in the original filing.

(b) Final Subdivision Map. If the proposed amendment is to a subdivision plat, those procedures for the approval and filing of a final map and the requirements of Section 110.616.35 shall apply.

(c) Appeal. An appeal of the Planning Commission's decision must be made within ten (10) days of the action by the Planning Commission.

Section 110.616.35 Major Amendment: Standards. Any amended plat, map or survey shall comply with the following:

(a) Be identical in size and scale to the document being amended, drawn in the manner and on the material provided by law;

(b) Have the words "Amended Plat of" prominently displayed on each sheet above the title of the document amended;

(c) Have a blank margin for the County Recorder's index information;

(d) Have a three (3) inch square adjacent to and on the left side of the existing square for the County Recorder's information and stamp;

(e) Contain the certificate required by NRS 278 or an order of the District Court of Washoe County that the amendment may be approved without all the necessary signatures if the order is based upon a finding that a bona fide effort was made to communicate with the necessary persons, that all persons who responded have consented thereto and that the amendment does not adversely affect the persons who did not respond;

(f) Contain a certificate of the professional land surveyor who prepared the amendment stating that it complies with all pertinent sections of NRS 278, NRS 625, the Development Code, and any other applicable local ordinance; and

(g) Contain a certificate executed by the County Surveyor, if he or she is a professional land surveyor, or a Nevada registered civil engineer stating that he or she has examined the document and that it is technically correct.

Section 110.616.40 Major Amendment: Recordation. Upon recording the amended document, the County Recorder shall cause a proper notation to be entered upon all recorded sheets of the document being amended, if the County Recorder does not maintain a cumulative index for such maps and amendments. If such an index is maintained, the County Recorder shall direct an appropriate entry for the amendment.

Article 618
BOUNDARY LINE ADJUSTMENT

Sections:

110.618.00	**Purpose**
110.618.05	**Applicability**
110.618.10	**Application**
110.618.15	**General Review and Approval Process**
110.618.16	**Review and Approval Process for a Boundary Line Adjustment which Results in Relocation of a Parcel**
110.618.18	**Notice for a Boundary Line Adjustment which Results in Relocation of a Parcel**
110.618.19	**Findings for a Boundary Line Adjustment which Results in Relocation of a Parcel**
110.618.20	**Requirements**
110.618.25	**Record of Survey**
110.618.30	**Recordation**

Section 110.618.00 Purpose. The purpose of this article, Article 618, Boundary Line Adjustment, is to prescribe the procedures for adjusting boundary lines.

Section 110.618.05 Applicability. The provisions of this chapter apply to all boundary line adjustments, including those proposed pursuant to Section 110.606.05, except when part of the creation of a lot for agricultural purposes that complies with Section 110.602.15

[Amended by Ord. 1364, provisions eff.4/4/08.]

Section 110.618.10 Application. A written application for a boundary line adjustment may be submitted to the Department of Community Development. The application shall be accompanied by a record of survey.

Section 110.618.15 General Review and Approval Process. The application shall be reviewed by the Department of Community Development and the County Engineer. Except as noted in Section 110.618.16, the Director of the Department of Community Development or the County Engineer or their representatives shall have the authority to approve a boundary line adjustment.

[Amended by Ord. 876, provisions eff. 7/7/93; renamed from "Review and Approval Process" and amended by Ord. 952, provisions eff. 6/7/96.]

Section 110.618.16 Review and Approval Process for a Boundary Line Adjustment which Results in Relocation of a Parcel. If a boundary line adjustment results in the relocation of a parcel, the Planning Commission shall review the request in accordance with the provisions of this section.

(a) Filing. The subdivider shall file with the Director of Community Development a complete application and the required supporting materials as outlined in the application packet.

(b) Review. If the application is found to be complete, the Director of Community Development shall distribute a copy of the application to the County Engineer, any other public agency which may be affected by the proposal, and such other persons as the Director of Community Development may deem appropriate.

(c) Action Required by the Planning Commission. The Planning Commission shall, within forty-five (45) days after receipt of the complete application by the Director of Community Development, conduct a public hearing on the application and following the public hearing, approve, conditionally approve, or deny the proposed boundary line adjustment. The Planning Commission shall make the findings contained in Section 110.618.19 prior to approving a boundary line adjustment. Action review time may be extended by mutual consent of the Director of Community Development and the applicant.

(d) Appeal. Within seven (7) days after issuance of the decision, the decision of the Planning Commission may be appealed to the Board of County Commissioners by submitting the appropriate form and fee to the Director of Community Development.

(e) Board of County Commissioners' Consideration of Appeals. Appeals of any Planning Commission decision shall be heard by the Board of County Commissioners within thirty (30) days of receiving the appeal.

[Added by Ord. 952, provisions eff. 6/7/96.]

Section 110.618.18 Notice for a Boundary Line Adjustment which Results in Relocation of a Parcel. Notice shall be given in accordance with the provisions of this section.

(a) Notice of Property Owners by Mail. A notice setting forth the time, place, purpose of hearing, and map or physical description of the land involved shall be sent by mail at least ten (10) days before the meeting to the following persons:

(1) All owners of real property that are the subject of the boundary line adjustment;

(2) Advisory boards created by the Board of County Commissioners for the area in which the property that is the subject of the boundary line adjustment is located;

(3) All owners of real property within three hundred (300) feet of the property which is the subject of the boundary line adjustment;

(4) All tenants of any mobile home park that is located within three hundred (300) feet of the property which is the subject of the boundary line adjustment; and

(5) All General Improvement Districts (GID) for the area in which the property that is the subject of the boundary line adjustment is located.

(b) Number of Notices. If the number of notices sent pursuant to this section does not total thirty (30) or more, the County shall send out additional notices to make the total number at least thirty (30). These notices shall be sent to owners of real property that are closest to the property in question, not including those owners provided notice pursuant to Subsection (a) of this section.

(c) Compliance with Noticing Requirements. Owners of all real property to be noticed pursuant to this section shall be those owners identified on the latest County Assessor's ownership maps and records. Such notice is complied with when notice is mailed to the last known addresses of such real property owners as identified in the latest County Assessor's records. Any person who attends the public hearing shall be considered to be legally noticed unless those persons can provide evidence that they were not notified according to the provisions of this section.

[Added by Ord. 952, provisions eff. 6/7/96.]

Section 110.618.19 Findings for a Boundary Line Adjustment which Results in Relocation of a Parcel. If a boundary line adjustment results in the relocation of a parcel, prior to approving such an application, the Planning Commission shall find that all of the following are true:

(a) Past Government Action. The subject property is an existing parcel which does not meet the density and minimum size requirements of its land use designation due to past government action;

(b) Physical Constraint. The development of the subject property is constrained by limited access, floodplains, wetlands, or steep slopes;

(c) Proximity. The relocated parcel will not be more than 500 feet from its original location;

(d) Adverse Impacts. The relocated parcel will not create significant adverse impacts to surrounding properties;

(e) Plan Consistency. The parcel relocation does not promote a use which is inconsistent with the Master Plan or applicable area plan;

(f) Availability of Services. The relocated parcel will meet the requirements of Article 702, Adequate Public Facilities Management System; and

(g) Number of Substandard Lots. The boundary line adjustment will not result in an increase in the number of substandard lots.

[Added by Ord. 952, provisions eff. 6/7/96; Ord. 1447, provisions eff. 9/9/10.]

Section 110.618.20 Requirements. The application shall not be approved unless it complies with the provisions of this section.

(a) Number of Lots. No additional lots shall be created.

(b) Minimum Area. No parcel shall be created that is smaller than that allowed by Article 404, Lot Standards, except as provided by Section 110.618.16.

(c) Access. No parcel shall be created that does not have road access.

(d) Encroachment. No encroachment into any public easement, right-of-way or required yard shall be allowed.

(e) Other Requirements. The application shall comply with the other requirements of the Development Code.

[Amended by Ord. 952, provisions eff. 6/7/96.]

Section 110.618.25 Record of Survey. The record of survey shall be prepared by a professional land surveyor. It shall contain the elements as set forth in the section.

(a) Surveyor's Certificates. A certificate by the professional surveyor who prepared the map stating that:

(1) He or she has performed a field survey of the boundaries of the affected parcels;

(2) That all corners and angle points of the adjusted boundary line have been set; and

(3) The map is not in conflict with the provisions of the Development Code.

(b) Owners' Certificates. A certificate that is executed and acknowledged by each affected owner of the abutting parcels which states that:

(1) He or she has examined the plat and approves and authorizes the recordation thereof;

(2) He or she agrees to execute the required documents creating any easement which is shown;

(3) He or she agrees to execute the required documents abandoning any existing easement pursuant to Article 806, Vacations and Abandonments of Easements or Streets;

(4) All property taxes on the land for the fiscal year have been paid; and

(5) That any lender with an impound account for the payment of taxes has been notified of the adjustment of the boundary line or the transfer of the land.

(c) County's Certificates. A certificate by the County Commission, Planning Commission, Director of the Department of Community Development or the County Engineer approving the adjustment of the boundary line.

[Amended by Ord. 876, provisions eff. 7/7/93; Ord. 952, provisions eff. 6/7/96.]

Section 110.618.30 Recordation. An approved application is not effective until the deed and record of survey are recorded and the provisions of NRS 625 are met.

Division Seven - Infrastructure Availability and Financing
CONTENTS

	Page
Infrastructure Availability and Financing: Title and Contents	700-1
Adequate Public Facilities Management System	702-1
Adequate Public Facilities: Sanitary Sewer	704-1
Impact Fees	706-1

LIST OF MAPS

Map 110.706.10.1: Southeast Truckee Meadows Specific Plan Impact Fee Service Area	706-10
Map 110.706.10.2: Southeast Truckee Meadows Specific Plan Impact Fee Detention Basins	706-11

Article 700
INFRASTRUCTURE AVAILABILITY AND FINANCING: TITLE AND CONTENTS

[This Article amended in its entirety by Ord. 1096, provisions eff. 7/28/00].

Sections:

110.700.00 Title
110.700.05 Contents

Section 110.700.00 Title. Division Seven of Chapter 110, Development Code, is entitled Infrastructure Availability and Financing.

Section 110.700.05 Contents. Division Seven consists of the following articles:

(a) ARTICLE 700 INFRASTRUCTURE AVAILABILITY AND FINANCING: TITLE AND CONTENTS

(b) ARTICLE 702 ADEQUATE PUBLIC FACILITIES MANAGEMENT SYSTEM

(c) ARTICLE 704 ADEQUATE PUBLIC FACILITIES: SANITARY SEWER

(d) ARTICLE 706 IMPACT FEES

Article 702
ADEQUATE PUBLIC FACILITIES MANAGEMENT SYSTEM

Sections:

110.702.00	**Purpose**
110.702.05	**Applicability**
110.702.10	**Adequate Public Facilities Determination**
110.702.15	**Final Development Approval**
110.702.20	**Vesting for Adequate Public Facilities Determination**
110.702.25	**Exempt Projects**
110.702.30	**Applications**
110.702.35	**Timing of Adequate Public Facilities Determination**
110.702.40	**Adequate Public Facilities Determination Process**
110.702.45	**Standards for Adequate Public Facilities**
110.702.50	**Transferability**
110.702.55	**Period of Validity**
110.702.60	**Revocation of Determination of Adequate Public Facilities**
110.702.65	**Revocation Process**
110.702.70	**Modification of Project**

Section 110.702.00 Purpose. The purpose of this article, Article 702, Adequate Public Facilities Management System, is to ensure that the public infrastructure necessary to support a development project will be available concurrently with the impacts of that development without causing the level of service at which the infrastructure is provided to fall below adopted standards.

[Amended by Ord. 873, provisions eff. 6/7/93.]

Section 110.702.05 Applicability. Unless otherwise specifically excluded by Section 110.702.20 or Section 110.702.25, the provisions of this article shall apply to all development requiring one of the approvals listed in Section 110.702.15.

(a) Types of Infrastructure. The provisions of this article shall apply to the following types of infrastructure:

(1) Sanitary Sewer.

(b) Supplemental Provisions. Supplemental provisions for the infrastructure listed in Subsection (a) of this section are contained in the following articles:

(1) Article 704, Adequate Public Facilities: Sanitary Sewer.

Section 110.702.10 Adequate Public Facilities Determination. All development subject to the provisions of this article shall require an adequate public facilities determination to ensure that infrastructure will be made available concurrent with the impacts of that development.

(a) Positive Determination. If the adequate public facilities determination is positive, a Certificate of Adequate Public Facilities shall be issued.

(b) Negative Determination. If the adequate public facilities determination is negative, the applicant shall be notified that a Certificate of Adequate Public Facilities cannot be issued. Grading or construction shall not begin nor shall the County issue a final development approval for a development project requiring an adequate public facilities determination until a Certificate of Adequate Public Facilities is issued.

Section 110.702.15 Final Development Approval. Final development approval as used in this article means the action required from the following list that effectuates the approval for the specific development project:

(a) Tentative Parcel Map Approval (Article 606): the action is the recordation of a final map;

(b) Tentative Subdivision Map Approval (Article 608): the action is the recordation of a final map;

(c) Special Use Permit (Article 810): the action is the issuance of a grading permit, building permit or business license;

(d) Development Agreement Approval (Article 814): the action is the recordation of the development agreement;

(e) Site Plan Review: if not part of an approval process listed above, the action is the issuance of a grading permit, building permit or business license; or

(f) Building Permit: the action is the issuance of the building permit.

[Amended by Ord. 873, provisions eff. 6/7/93; Ord. 1447, provisions eff. 9/9/10.]

Section 110.702.20 Vesting for Adequate Public Facilities Determination. Development projects that are vested for an adequate public facilities determination at the effective date of this article are not subject to the Adequate Public Facilities Management System. All of the following must be met in order for a development project to be vested for an adequate public facilities determination:

(a) The development project has received final approval as defined in Section 110.702.15 prior to the effective date of this Development Code;

(b) The applicant has expended substantial sums of money or incurred substantial obligations in reliance upon the final approval (substantial is defined as more than five (5) percent of the total project cost; monies spent or obligations incurred before the issuance of the final approval are not included); and

(c) Construction on the development project has commenced by visually apparent activities on the ground and has continued on a reasonable schedule, taking into account such factors as weather, labor availability, and local market demand.

[Amended by Ord. 873, provisions eff. 6/7/93.]

Section 110.702.25 Exempt Projects. The following development projects are exempt from the Adequate Public Facilities Management System:

(a) Interior or exterior renovations, provided the use does not change and the size does not increase more than ten (10) percent of the total floor area;

(b) Temporary construction trailers;

(c) Relocation of temporary uses;

(d) Signs;

(e) Fences and walls;

(f) Wells and septic tanks;

(g) Driveway and parking lot resurfacing;

(h) Single family dwellings built on individual lots created prior to the effective date of this article;

(i) Agricultural uses;

(j) Boundary Line Adjustments;

(k) Abandonments;

(l) Reversion to Acreage;

(m) Amended maps, provided the amended map does not create additional parcels;

(n) Large parcel (forty acres or larger) residential subdivisions, as defined in Article 612;

(o) Attached accessory dwellings to a single family dwelling;

(p) Replacement structures for those that were destroyed, provided the use does not change and the size does not increase; and

(q) Temporary public facilities needed on an emergency or other essential basis to provide public facilities and services.

[Amended by Ord. 873, provisions eff. 6/7/93.]

Section 110.702.30 Applications. The applicant is responsible for providing sufficient information to enable the Washoe County Department of Community Development to make the adequate public facilities determination.

Section 110.702.35 Timing of Adequate Public Facilities Determination. Requests for an adequate public facilities determination shall be made as provided in this section.

(a) Preliminary Adequate Public Facilities Determinations. The applicant may request a preliminary adequate public facilities determination at any point in the development review process as long as the project is, in the judgment of the

Director of Community Development, sufficiently defined to permit a determination to be made. The purpose of the preliminary adequate public facilities determination is to assure the applicant that capacity is available before he or she proceeds with more detailed project planning and that another project will not be approved that will consume the capacity during the detailed project planning. A preliminary adequate public facilities determination reserves capacity for one (1) year. Up to two (2) extensions of up to six (6) months each may be granted by the Director of Community Development, upon a finding that the applicant is diligently pursuing the application.

(b) Final Adequate Public Facilities Determination. A final adequate public facilities determination shall be made at the time of the final development approval. A final determination is deemed effective and reserves capacity, upon payment of the capacity reservation fee, until its expiration date as set forth in Section 110.702.55.

(c) Capacity Reservation Fee. A capacity reservation fee shall be collected pursuant to Section 110.702.35(b) and as set forth in Article 906: Fees. The capacity reservation fee may be refunded at any time at the discretion of the Director of Community Development. At the time a capacity reservation fee is refunded, the final adequate public facilities determination shall be deemed void. At the time any hook-up or initial service fees are paid, the full amount of the capacity reservation fee shall be applied toward the balance of any such fees.

(d) Phased Projects. The applicant may request an adequate public facilities determination for all phases or only the initial phase or phases of a multi-phased project. A Certificate of Adequate Public Facilities for the initial phase or phases of a project shall not establish a vested right to continue subsequent phases for which an adequate public facilities determination has not been made.

[Amended by Ord. 873, provisions eff. 6/7/93.]

Section 110.702.40 Adequate Public Facilities Determination Process. The adequate public facilities determination shall be made by comparing the available capacity of the facility or service to the demand created by the proposed project. Available capacity will be determined by adding together the total excess capacity of existing facilities and the total capacity of any new facilities which meet the previously defined standards and subtracting any capacity committed through projects that are vested for an adequate public facilities determination pursuant to Section 110.702.20, exempt projects pursuant to Section 110.702.25, and projects having a previously issued Certificate of Adequate Public Facilities.

Section 110.702.45 Standards for Adequate Public Facilities. A Certificate of Adequate Public Facilities will be issued only if the proposed development does not lower the level of service for those infrastructure facilities included in Subsection (a) of Section 110.702.05 below the adopted standards as set forth in the supplemental provisions listed in Subsection (b) Section 110.702.05.

Section 110.702.50 Transferability. A Certificate of Adequate Public Facilities shall be specific to a parcel or parcels of land and may be transferred with the land. A Certificate of Adequate Public Facilities shall not be transferable to other parcels of land.

Section 110.702.55 Period of Validity.

(a) Expiration Date. The final adequate public facilities determination expires when the permit with which it is associated expires. If the permit is extended, the adequate public facilities determination is extended for the same period of time.

(b) Extension Due to Additional Permit or Approval. If, in order to construct a project that has received a final adequate public facilities determination pursuant to the provisions of this article, an applicant must first obtain an additional permit or approval from Washoe County or another governmental agency before applying for a building permit, then, upon submission of appropriate documentation to the Director of the Department of Community Development, any time limit for the final adequate public facilities determination specified in this article shall be extended for the amount of time between the date the applicant submitted an application for the additional permit or approval and the date the additional permit or approval was granted.

[Amended by Ord. 873, provisions eff. 6/7/93.]

Section 110.702.60 Revocation of Determination of Adequate Public Facilities. In order to prevent capacity from being held by projects that are not completed in a timely manner, an action to revoke the adequate public facilities determination may be commenced under the following circumstances:

(a) Parcel Map Not Recorded in Timely Manner. A parcel map is not recorded within the time frame enumerated in NRS;

(b) Final Map Not Recorded in Timely Manner. A final subdivision map is not recorded within time frame enumerated in NRS;

(c) Special Use Permit. Any condition of a special use permit is not met;

(d) Development Agreement Not Completed. Any condition of a development agreement is not met; or

(e) Construction Not Completed in Timely Manner. In the case of an adequate public facilities determination related to a building permit or a site plan, construction is not completed within the time specified in the permit.

[Amended by Ord. 873, provisions eff. 6/7/93.]

Section 110.702.65 Revocation Process. The procedure for revocation of a determination of adequate public facilities shall be that used for the revocation of an Administrative Permit, described in Article 808, except that the revocation shall be made upon a finding of any one (1) or more of the following grounds:

(a) Due Diligence to Record Maps. The applicant, or the applicant's successors, has not pursued with due diligence the recordation of the required maps;

(b) Condition of Special Use Permit Not Completed. A condition of a special use permit has not been met;

(c) Development Agreement Not Completed. A condition of a development agreement has not been met; and/or

(d) Due Diligence to Complete Construction. In the case of an adequate public facilities determination related to a building permit or a site plan, the applicant, or the applicant's successors, has not pursued with due diligence the completion of construction.

[Amended by Ord. 873, provisions eff. 6/7/93.]

Section 110.702.70 Modification of Project. If the project is modified after the final adequate public facilities determination is made and if the modification changes infrastructure demands, the County may require a new adequate public facilities determination be made and the capacity reservation fee be recalculated for partial refund or additional payment of capacity reservation fees.

Article 704
ADEQUATE PUBLIC FACILITIES: SANITARY SEWER

[This Article amended in its entirety by Ord. 873, provisions eff. 6/7/93.]

Sections:

110.704.00	**Purpose**
110.704.05	**Applicability**
110.704.10	**Level of Service**
110.704.15	**Status of Facilities**
110.704.20	**Included Facilities**
110.704.25	**Determination of Adequate Public Sanitary Sewer**
110.704.30	**Demand Calculations**

Section 110.704.00 Purpose. The purpose of this article, Article 704, Adequate Public Facilities: Sanitary Sewer, is to provide supplemental regulations to Article 702, Adequate Public Facilities Management System for the efficient provision of sanitary sewer services to new development.

Section 110.704.05 Applicability. This article shall apply only to the unincorporated area of the County that is not within a city sphere of influence as designated pursuant to NRS 278.

Section 110.704.10 Level of Service. The sanitary sewer system shall accommodate the projected peak flow, discharge treated wastewater that meets applicable state and federal standards, and maintain a reserve capacity of ten (10) percent.

Section 110.704.15 Status of Facilities. A project will be deemed as having adequate public sanitary sewer facilities if the level of service set forth in Section 110.704.10 meets any of the following provisions:

(a) The facilities are in place at the time the final development approval is issued;

(b) The facilities are under construction at the time the final development approval is issued;

(c) The facilities are included in the County Capital Improvements Program, are scheduled to be completed within five (5) years, and are accompanied by identified specific funding sources; or

(d) The facilities are guaranteed, in an enforceable agreement, to be in place concurrent with the impacts of development. This provision shall be interpreted to mean a developer may provide the facilities at the expense of the developer and in a manner enforceable by, and agreeable to, Washoe County.

Section 110.704.20 Included Facilities. The analysis of the adequate public facilities for sanitary sewer systems shall include an analysis of the capacity of the treatment plant and its interceptors.

Section 110.704.25 Determination of Adequate Public Sanitary Sewer. The Department of Water Resources, or its successors, is responsible for determining if the provisions in Section 110.704.15 are met. If one (1) or more of the provisions are met, the Department of Water Resources shall so indicate in writing to the Department of Community Development. In the event a proposed project is reliant on any sanitary sewer facilities provided by a public or private purveyor other than Washoe County, the Determination of Adequate Public Sanitary Sewer provided by the Department of Water Resources shall be made pursuant to consultation and information provided by the duly authorized agent of that public or private purveyor.

Section 110.704.30 Demand Calculations. If the Department of Water Resources is unable to make a determination using available information, it may request that the applicant submit a demand study prepared by a Nevada registered professional engineer.

Article 706
IMPACT FEES

Sections:

110.706.00	**Purpose**
110.706.05	**Regional Road Impact Fee**
110.706.10	**Southeast Truckee Meadows Specific Plan Impact Fee**

Section 110.706.00 Purpose. The purpose of this article, Article 706, Impact Fees, is to set forth regulations for imposition of impact fees adopted by ordinance to ensure that new development contributes its proportionate share of the cost of providing, and benefits from such provision of, required improvements to public infrastructure as identified in this article in accordance with NRS 278B.

[Added by Ord. 938, provisions eff. 2/15/96.]

Section 110.706.05 Regional Road Impact Fee.

(a) Short Title, Authority and Application.

(1) Title. This section shall be known and may be cited as the "Regional Road Impact Fee" (hereinafter "RRIF") section.

(2) Authority. The Board of County Commissioners of Washoe County has the authority to adopt this section pursuant to the Nevada Constitution, Sec. 278, et. seq., NRS, Sec. 278B.010 - 278B.320, NRS, Sec. 244.155 and 244.195, NRS, and Sec. 277.080 - 277.180, NRS.

(3) Application. This section shall apply to all lands within unincorporated Washoe County that are within the Service Area, and pursuant to the Regional Road Impact Fee Ordinance Interlocal Cooperative Agreement (hereinafter "RRIF Interlocal Cooperative Agreement"), and all other lands within the boundaries of the City of Reno and the City of Sparks.

(b) Intent and Purpose.

(1) Intent is to Implement Regional CIP, Local Road CIPs and Local Master Plans. This section is intended to implement and be consistent with the Regional Road Impact Fee System Capital Improvements Plan (hereinafter "RRIF CIP"), the Washoe County Road Capital Improvements Plan (hereinafter "Local CIP") and Master Plan, and the Local CIPs and Master Plans of the other two (2) Participating Local Governments.

(2) Purpose is to Establish Regionwide Impact Fee Program. The purpose of this section is to establish a Regionwide Impact Fee Program by the establishment of a comprehensive and Regionwide system for the imposition of road impact fees to assure that new development

contributes its proportionate share of the cost of providing, and benefits from the provision of, the road capital improvements identified as needed to be built in the RRIF CIP which has been adopted as Washoe County's Local CIP, and the Local CIP of the other two (2) Participating Local Governments.

(c) Liberal Construction, Severability and Penalty Provisions.

(1) Liberal Construction. The provisions of this section shall be literally construed to effectively carry out its purposes in the interest of the public health, safety, welfare and convenience.

(2) Severability. If any subsection, phrase, sentence or portion of this section is for any reason held invalid or unconstitutional by any court of competent jurisdiction, such portion shall be deemed a separate, distinct and independent provision, and such holding shall not affect the validity of the remaining portions.

(d) Adoption and Amendment of the Regional Road Impact Fee System General Administrative Manual. The Regional Road Impact Fee System General Administrative Manual (hereinafter "RRIF Manual") as amended and approved by the Regional Transportation Commission of Washoe County on June 15, 2007 and attached as Exhibit "1" and incorporated by reference, is hereby adopted. The RRIF Manual shall contain appropriate definitions, an independent fee calculation study, exemptions, credits, appeals and review sections for the effective administration of the program. It may subsequently be amended by a resolution approved by the Regional Transportation Commission Board and the Governing Bodies of each Participating Local Government.

Fees identified in Exhibit "1" shall be adjusted pursuant to the procedures enumerated below:

(1) That except as provided in subsection (2), below, the columns designated "$/VMT" and "Fees" in Exhibit "D" of the Regional Road Impact Fee System General Administrative Manual shall be increased automatically every twelve months by the RTC RRIF Administrator:

(i) By a percentage equal to the average annual percentage of increase in the Consumer Price Index for West Urban Consumers for the preceding five (5) calendar years; or

(ii) By 4.5 percent, whichever is less.

(2) No increase authorized by subsection (1), above, shall occur within a twelve month period following action by the County to:

(i) Adopt any revisions to the Regional Road Impact Fee land use assumptions in accordance with NRS 278B.290; or

(ii) Adopt any ordinance that amends the Regional Road Impact Fee System Capital Improvement Plan; or

(iii) Otherwise increase the impact fee.

(e) Adoption of the Regional Road Improvement Fee System Capital Improvement Plan ("RRIF CIP"). The RRIF CIP, as amended and adopted by the Regional Transportation Commission of Washoe County on June 15, 2007 and attached as Exhibit "2" and incorporated by reference, is hereby adopted. It may be amended only by subsequent ordinance.

(f) Service Area and Benefit Districts. The area encompassed within the boundaries of the three (3) Benefit Districts is hereby designated as the Service Area for the imposition of regional road impact fees and the collection and expenditure of funds under the provisions of this section. The Service Area is identified in Figure 1 of the RRIF CIP, referred to in paragraph (e) of this section and is defined as:

(1) Northwest Benefit District. Starting at the southwest corner of the district at the California-Nevada state line and Interstate 80, follow the state line north to the northern boundary of the Washoe County North Valleys planning area (i.e. northern boundary of the Red Rock Hydrographic Basin boundary), then east along the northern boundary of the North Valleys planning area (i.e. northern boundary of the Red Rock and Bedell Flat Hydrographic Basin boundary), then south along the eastern edge of the North Valleys planning area (i.e. eastern boundary of the Bedell Flat and Antelope Valley Hydrographic Basin boundary) to the western edge of the Washoe County Sun Valley planning area boundary, then continue south along the western edge of the Sun Valley planning area to U.S. 395 at the Sutro Street terminus, then southeast along the U.S. 395 alignment to Interstate 80, then west along Interstate 80 to the state line.

(2) Northeast Benefit District. Starting at the southwest corner of the district at the U.S. 395-Interstate 80 interchange, follow U.S. 395 northwest to the Sutro Street terminus, then continue north along the western edge of the Washoe County Sun Valley planning area to the eastern edge of the Washoe County North Valleys planning area, then north to the western edge of the Washoe County Warm Springs planning area, then north to the northwest corner of the Warm Springs planning area, then east along the northern boundary of the Warm Springs planning area, then southeast and south along the boundary of the Warm Springs planning area, then west along the southern boundary of the Warm Springs planning area to the eastern edge of the Washoe County Spanish Springs planning area and the Washoe County Truckee Canyon planning area, then southwest along the western edge of the Truckee Canyon planning area to Interstate 80, then west along Interstate 80 to U.S. 395.

(3) South Benefit District. Starting at the northwest corner of the district at the California-Nevada state line and Interstate 80, follow Interstate 80 east to the western edge of the Washoe County Truckee Canyon planning area, then south along the Washoe County-Storey County line to the Washoe County-Carson City line, then west along the Washoe County-Carson City line to the southern jurisdictional line of the Tahoe Regional Planning Agency and the Washoe County Tahoe planning area, then north along the California-Nevada state line to Interstate 80.

(g) Impact Fees. The amount of the impact fees shall be determined by the Local RRIF Administrator in accordance with the applicable provisions of the RRIF Manual amended and adopted June 15, 2007 or as subsequently amended by resolution as provided herein and the application of the fee schedule identified in the relevant table of the RRIF CIP referred to in paragraph (e) of this section. Said fee schedule may only be modified by subsequent ordinance.

(h) Use of Funds.

(1) Establishment of Trust Fund. There is hereby established the Washoe County Regional Road Impact Fee Trust Fund (hereinafter "Washoe County RRIF Trust Fund") and the RTC Regional Road Impact Fee Trust Fund (hereinafter "RTC RRIF Trust Fund") for the purpose of ensuring that feepayers receive sufficient benefit for regional road impact fees paid.

(2) Deposit in Trust Fund/General Requirements for Trust Fund.

(i) All regional road impact fees collected by Washoe County's RRIF Administrator pursuant to this section shall be immediately deposited in the Washoe County RRIF Trust Fund.

(ii) Any proceeds in the Washoe County RRIF Trust Fund not immediately necessary for expenditure shall be invested in an interest-bearing account. All income derived from these investments shall be retained in the Washoe County RRIF Trust Fund until transferred to the RTC RRIF Trust Fund. Record of the Washoe County RRIF Trust Fund accounts shall be available for public inspection in the Local Government RRIF Administrator's Office, during normal business hours.

(iii) No less frequently than quarterly, and pursuant to the RRIF Interlocal Cooperative Agreement, the Washoe County RRIF Administrator shall transfer the impact fee funds in the Washoe County RRIF Trust Fund to the RTC RRIF Administrator, who shall deposit these funds in the RTC RRIF Trust Fund. All proceeds in the RTC RRIF Trust Fund not immediately necessary for expenditure shall be invested in an interest bearing account. Records of the RTC RRIF Trust Fund accounts shall be available for public inspection in the RTC RRIF Administrator's Office, during normal business hours.

(3) Limitations on Expenditures.

(i) Impact fee monies shall only be expended from funds drawn from the RTC RRIF Trust Fund.

(ii) Funds shall only be expended on those projects selected by the RTC Board and approved by the RTC Board and the Participating Local Governments in the RRIF Interlocal Cooperative Agreement.

(iii) The expenditure of impact fee funds shall be limited to those road capital improvement projects included in the RRIF CIP.

(iv) For the purposes of determining whether impact fee funds have been spent or encumbered, the first fees collected shall be considered the first monies spent or encumbered.

(v) If impact fee funds transferred to the RTC RRIF Trust Fund are required to be refunded pursuant to Section VIII of the RRIF Manual, they shall be returned by the RTC RRIF Administrator to the Local RRIF Administrator for refund.

(4) Benefit Districts. The Service Area is divided into three (3) Benefit Districts as described in the RRIF CIP. Impact fee funds shall be spent within the Benefit District from which the traffic generating land development activity paying the fee is located, except that:

(i) Where a road on the RRIF Network as identified in the RRIF CIP is used to define Benefit District boundaries, the road demarcating the boundary shall be considered as part of both Benefit Districts that it bounds, the impact fees from both Benefit Districts may be used to fund road capital improvements for that road; or

(ii) Impact fee funds from all Benefit Districts may be used to fund road capital improvements identified on the RRIF CIP for McCarran Boulevard and Virginia Street; or

(iii) Impact fee funds may be used to fund a road capital improvement on the RRIF CIP outside the Benefit District from which the fees are collected if it is demonstrated by competent substantial evidence that the feepayers from the Benefit District from which the fees come will receive sufficient benefit from the road capital improvement.

(i) Requirement for Initiating Resolution to Amend Article. The requirement of Section 110.818.05, Requirements for Application, does not apply to the amendment of this section.

(j) Effective Date of Regional Road Impact Fee Section. The RRIF section shall become effective thirty (30) days after this section and similar Ordinances are adopted by the City of Reno and the City of Sparks.

[Added by Ord. 938, provisions eff. 2/15/96. Amended by Ord. 1066, provisions eff. 7/9/99; Ord. 1201, provisions eff. 6/27/03; Ord.1307, provisions eff. 7/7/06; Ord. 1348, provisions eff. 11/2/07.]

Section 110.706.10 Southeast Truckee Meadows Specific Plan Impact Fee.

(a) Purpose.

(1) The purpose of this section is to establish a comprehensive system of regulation for the imposition of drainage project impact fees to assure that new development in the Southeast Truckee Meadows Specific Plan area ("SETMSP") contributes its proportionate share of the cost of providing, and benefits from such provision of, required area drainage-related facilities.

(2) The County, subsequent to the effective date of this ordinance (January 1, 1998), shall not impose any off-site drainage facility requirements or conditions for drainage facilities (detention facilities) covered by the fees imposed herein on any development approval for a project within the SETMSP service area, the boundaries of which service area are set forth in Map 110.706.10.1.

(3) The intent herein is to impose an impact fee for the detention facilities shown and identified on Map 110.706.10.2. If it is determined that additional facilities or property must be included within the service area to assure the orderly construction of necessary drainage facilities, this section will be amended accordingly.

(b) Administrative Manual. A "SETMSP Drainage Project Administrative Manual" may be adopted for the purpose of providing guidance in the administration of this section. The manual must be adopted and/or amended only after a public hearing by the Washoe County Planning Commission, acting in its capacity as capital improvements advisory committee, and adoption of a resolution by the Board of County Commissioners.

(c) Definitions.

Building Permit. "Building permit" means that development permit issued by the Department of Community Development before any building or construction activity can be initiated on a parcel of land. This does not include any permits for demolition, grading or the construction of a foundation.

Board. "Board" means the Board of County Commissioners.

Commencement of Land Development Activity. "Commencement of land development activity" occurs upon the issuance of a building permit.

Committee. "Committee" means the capital improvements advisory committee established by the Board, pursuant to NRS 278B.150, whose duties are to determine conformance of the land use assumptions with the County's master plan; review the capital improvements plan, file annual reports concerning the progress of the County in carrying out the capital improvements plan; report to the Board any perceived inequities in the implementation of the capital improvements plan or the imposition of an impact fee; hear appeals from administrative decisions regarding impact fees, and advise the Board of the need to update or revise the land use assumptions, capital improvements plan and section imposing an impact fee.

Department. "Department" means the Department of Water Resources.

Feepayer. "Feepayer" means a person commencing impact-generating land development activity who is obligated to pay an impact fee in accordance with the terms of this section.

Impact-Generating Land Development Activity. "Impact-generating land development activity" is land development designed or intended to permit a use of the land which will increase the impervious surface of land within the service area.

Non-Site Related Improvements. "Non-site related improvements" means capital improvements and dedications of land for regional drainage facilities (detention facilities) that are not site-related improvements.

Service Area. "Service area" means the area identified on Map 110.706.10.1.

Service Unit. "Service unit" means a standardized measure of consumption which is attributable to an individual unit of development calculated for a particular category of capital improvements. The service unit for purposes of the SETMSP drainage facility (detention facilities) impact fee is a per acre unit.

Site-Related Improvements. "Site-related improvements" means those capital improvements and land dedications related directly to the development in question and include, without limitation, drainage channels and mitigations identified on the flood control facility master plan as approved by the Planning Commission and Board.

Specific Plan. "Specific plan" means the Master Plan for the Southeast Truckee Meadows Specific Plan area as identified in the Master Plan and as approved and adopted by the Planning Commission and Board.

(d) Applicability. Upon enactment of this section, any person or governmental body who commences any land development activity in the SETMSP shall be obligated to pay an impact fee. All property owned by the Washoe County School District is exempt from the requirement of paying impact fees imposed pursuant to this section. The fee shall be determined and paid at the time of issuance of a building permit. The fee shall be computed separately for the amount of development covered by the permit, if the building permit is for less than the entire development, but must be computed to assure that the service unit cost is proportionately allocated to the total project acreage. The obligation to pay the impact fee shall run with the land.

(e) Improvement Agreement. The Board may enter into an agreement with an owner of land prior to the issuance of a building permit for the dedication of land and/or construction of drainage facilities (detention facilities) which provides:

(1) The costs incurred through dedication and/or construction of the drainage facilities (detention facilities) by the owner will be credited against impact fees due and such credit shall be based upon the cost of such drainage facility as used to determine the impact fee.

(2) If applicable, reimbursement will be made for costs exceeding credit as provided in (1) above from impact fees paid by other developments using those drainage facilities (detention facilities).

(3) Credit provided for costs in excess of impact fees due are transferable only within the SETMSP service area.

(f) Fee Schedule.

(1) Any person or governmental agency who initiates land development activity shall pay a drainage project impact fee in accordance with the following land use categories and fee schedule:

Land Use Category		Fee/Acre
LDS	Low Density Suburban	$1,814
MDS	Medium Density Suburban	$2,177
HDS	High Density Suburban	$2,576
LDU	Low Density Urban	$2,830
MDU	Medium Density Urban	$2,830
OC/I	Office Commercial/Industrial	$2,903
PR	Public/Recreational	$1,089

(2) The fee must be calculated as follows:

(i) For commercial, industrial and/or multi-residential development, by apportioning the fee per acre times the acreage contained in the parcel being developed.

(ii) For residential, by determining a per unit cost representing the acreage of the parcel or subject to a final map multiplied by the applicable fee per acre as set forth in (1) above and as divided by the number of lots.

(3) The fee must be calculated based upon the land use category and density as approved in the specific plan as adopted or as amended.

(g) Recalculation of Fee Schedule and Review. This section shall be reviewed and the fee schedule recalculated as follows:

(1) At least every third year, the committee shall recommend to the Board whether changes should be made to the land use assumptions, impact fee Section 110.706.10 and capital improvements plan. The committee shall consider in making said recommendations factors that affect the fee schedule including, but not limited to, effects of inflation on the cost of facilities, additional drainage project facility needs, changes in land uses and any perceived inequities in the implementation of the fee schedule.

(2) Upon any amendment to the specific plan affecting either upward or downward the number of residential units and commercial/industrial acreage, the fee schedule shall be recalculated to reflect said amendments.

(h) Pre-Development Review of Impact Fees. Any person contemplating establishing a land development activity may request a preliminary determination of the impact fees due from such development. A person requesting a pre-development review impact fee calculation shall complete and submit to the department the proper application form and any applicable fee. Using the information regarding the proposed project as submitted on the application, the department will provide, within fifteen (15) days, of the date of submittal of the completed application, a preliminary calculation of the impact fees due for the proposed project.

(i) Appeal. Any feepayer affected by an administrative decision regarding impact fees owed or process utilized to determine the fee may appeal such decision to the committee by filing with the department within ten (10) days of the date of the written decision, a written notice stating and specifying briefly the grounds of the

appeal. The department shall place such appeal on the committee agenda for the next regularly scheduled meeting occurring at least twenty-one (21) days thereafter. The committee, after a public hearing, shall have the power to affirm or reverse such decision of the department. If the committee reverses the decision of the department, it shall direct the department to recalculate the fee in accordance with its findings. In no case shall the committee have the authority to negotiate the amount of the fee. If the committee affirms the decision of the department, the applicant may appeal to the Board within ten (10) days of the committee's decision by filing a notice of appeal with the County Clerk. The Board shall consider and render a decision on the appeal.

(j) SETMSP Special Revenue Fund.

(1) All fees collected pursuant to this section shall be placed in a special revenue fund. The department shall maintain a record to identify the development and/or parcel for which the fees were collected.

(2) The expenditure of funds from the SETMSP drainage impact fee special revenue fund shall be limited to the detention facilities identified in the Southeast Truckee Meadows (SETM) flood control capital improvements plan, and shall be budgeted and appropriated through the County's annual capital improvements programming and budgeting process.

Map 110.706.10.1

SOUTHEAST TRUCKEE MEADOWS SPECIFIC PLAN IMPACT FEE SERVICE AREA

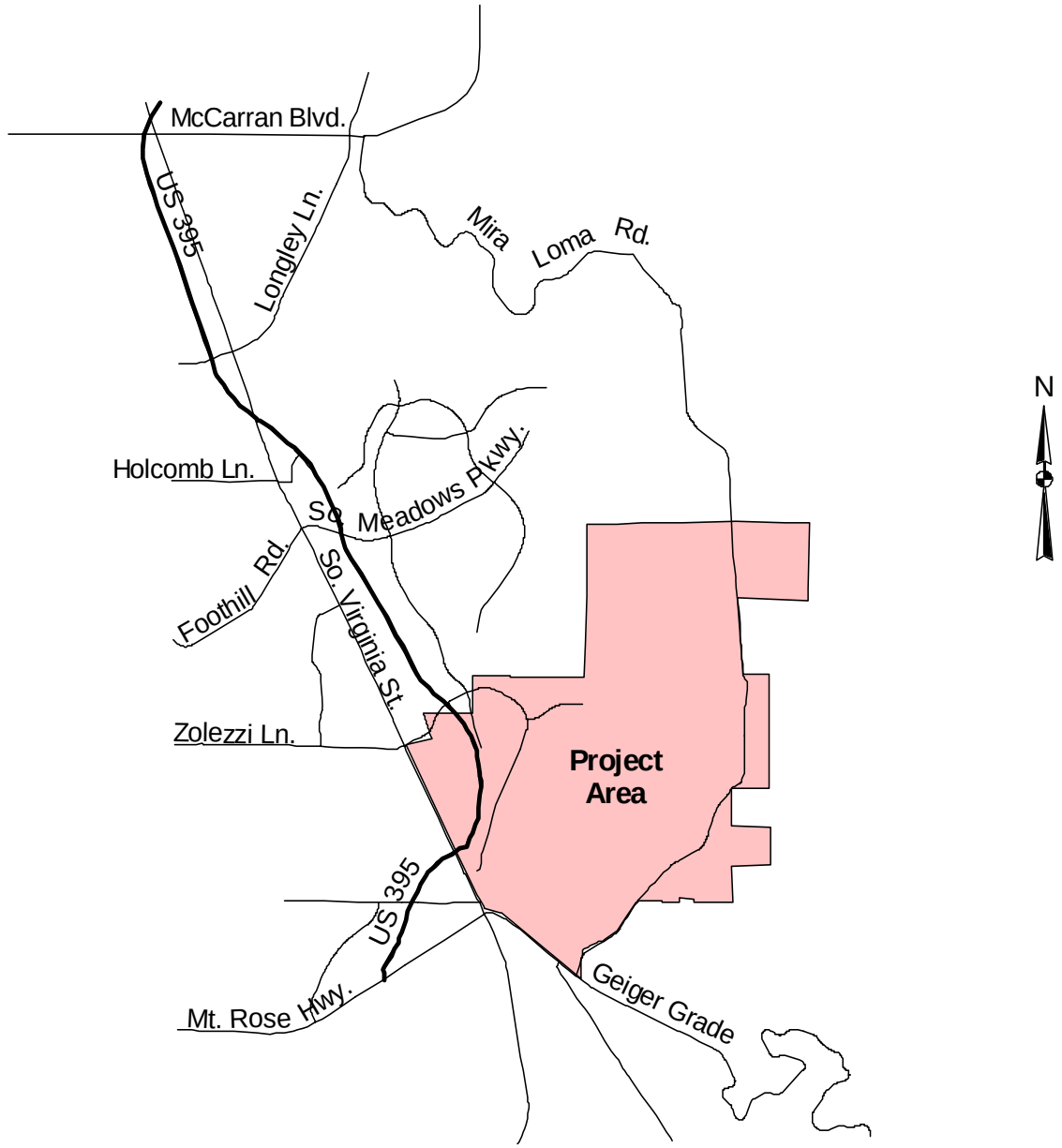

Source: Washoe County Department of Community Development.

Map 110.706.10.2

SOUTHEAST TRUCKEE MEADOWS SPECIFIC PLAN IMPACT FEE DETENTION BASINS

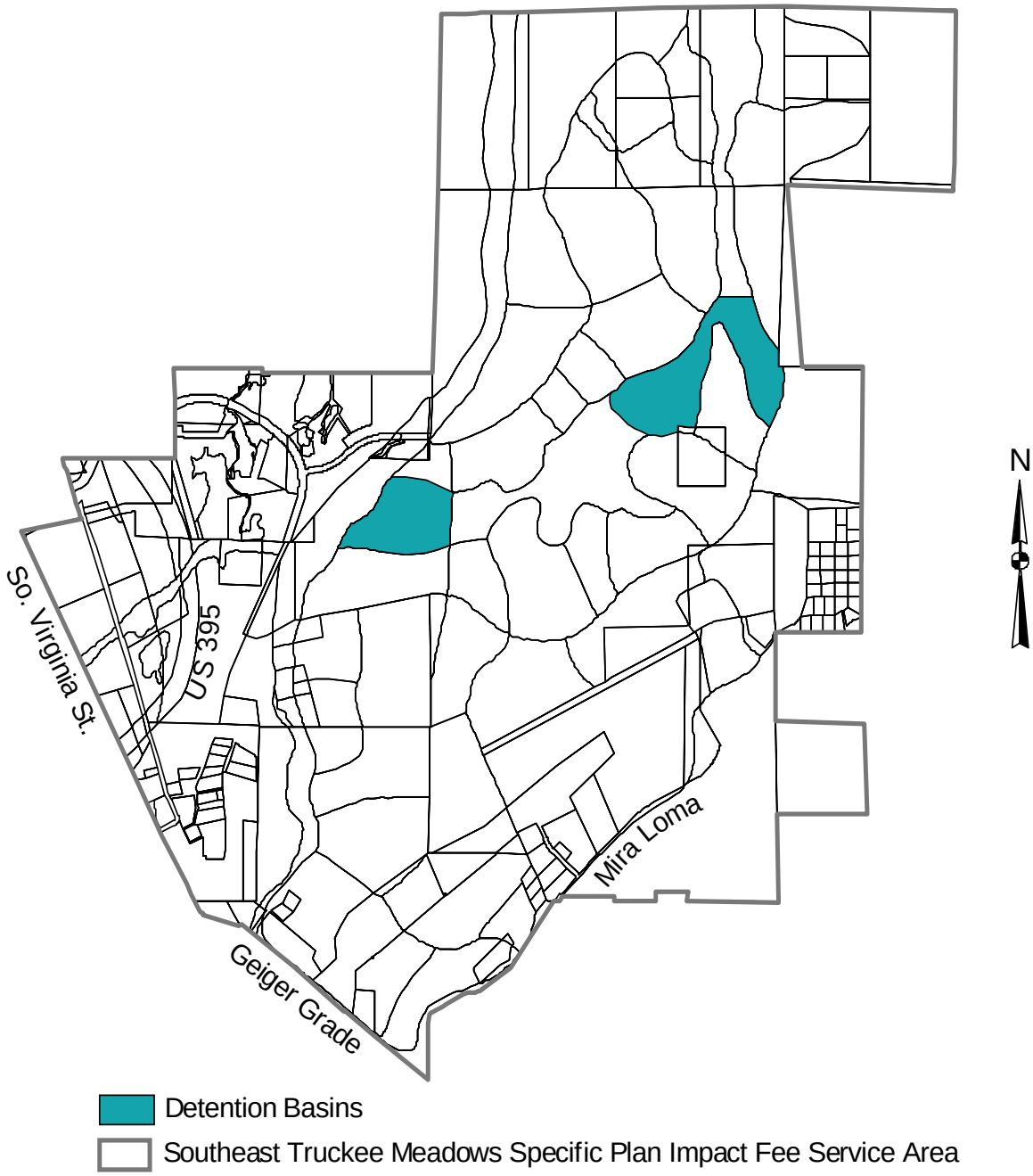

Source: Washoe County Department of Community Development.

[Added by Ord. 1003, provisions eff. 1/1/98. Amended by Ord. 1096, provisions eff. 7/28/00; Ord. 1447, provisions eff. 9/9/10.]

Division Eight - Procedures
CONTENTS

	Page
Procedures: Title and Contents	800-1
Variances	804-1
Vacations and Abandonments of Easements or Streets	806-1
Administrative Permits	808-1
Special Use Permits	810-1
Projects of Regional Significance	812-1
Development Agreements	814-1
Amendment of Development Code	818-1
Amendment of Master Plan	820-1
Amendment of Regulatory Zone	821-1
Provisions for Amendments to Local Master Plans and Zone Changes in Areas Subject to Cooperative Planning Under the Regional Plan Settlement Agreement	822-1

Article 800
PROCEDURES: TITLE AND CONTENTS

Sections:

110.800.00 Title
110.800.05 Contents

Section 110.800.00 Title. Division Eight of Chapter 110, Development Code, is entitled Procedures.

Section 110.800.05 Contents. Division Eight consists of the following articles:

(a) ARTICLE 800 PROCEDURES: TITLE AND CONTENTS

[Article 802 entitled "Administrative Waivers" repealed by Ord. 959, provisions eff. 7/26/96.]

(c) ARTICLE 804 VARIANCES

(d) ARTICLE 806 VACATIONS AND ABANDONMENTS OF EASEMENTS OR STREETS

(e) ARTICLE 808 ADMINISTRATIVE PERMITS

(f) ARTICLE 810 SPECIAL USE PERMITS

(g) ARTICLE 812 PROJECTS OF REGIONAL SIGNIFICANCE

(h) ARTICLE 814 DEVELOPMENT AGREEMENTS

(i) ARTICLE 818 AMENDMENT OF DEVELOPMENT CODE

(j) ARTICLE 820 AMENDMENT OF MASTER PLAN

(k) ARTICLE 821 AMENDMENT OF REGULATORY ZONE

(l) ARTICLE 822 PROVISIONS FOR AMENDMENTS TO LOCAL MASTER PLANS AND ZONE CHANGES IN AREAS SUBJECT TO COOPERATIVE PLANNING UNDER THE REGIONAL PLAN SETTLEMENT AGREEMENT

[Amended by Ord. 959, provisions eff. 7/26/96; Ord. 1200, provisions eff. 6/6/03]

Article 804
VARIANCES

Sections:

110.804.00	**Purpose**
110.804.05	**Requirements for Application**
110.804.10	**Supplemental Guideline, Standards and Criteria**
110.804.15	**Review Procedures**
110.804.20	**Notice**
110.804.25	**Findings**
110.804.30	**Projects of Regional Significance**
110.804.40	**Appeals**
110.804.45	**One Year Wait on Denials**
110.804.50	**Modification of a Variance**
110.804.55	**Expiration**
110.804.60	**Revocation**

Section 110.804.00 Purpose. The purpose of this article, Article 804, Variances, is to provide a means of altering the requirements of this chapter in specific instances where the strict application of those requirements would deprive a property of privileges enjoyed by other properties with the identical regulatory zone because of special features or constraints unique to the property involved. This article does not give the power to take action which, in effect, allows a land use in contravention of the applicable regulatory zone or in any other way changes the applicable regulatory zone. This article cannot be used to vary the standards contained in Division Five, Signs, of this Development Code. Additionally, this article cannot be used to vary the maximum size of a detached accessory dwelling except as stipulated in Article 306, Accessory Uses and Structures.

[Amended by Ord. 873, provisions eff. 6/7/93; Ord. 939, provisions eff. 11/1/95.]

Section 110.804.05 Requirements for Application. Applications for variances may be initiated by the Board of County Commissioners, the property owner or a property owner's authorized agent. Applications shall be filed with the Department of Community Development. A request for a variance shall include a site plan which clearly delineates the locations and extent of the regulation to be varied. In addition, the applicant shall provide evidence showing how the findings required in this article can be met. No variance shall be processed until the information necessary to review and decide upon the proposed variance is deemed complete by the Director of Community Development.

[Amended by Ord. 873, provisions eff. 6/7/93.]

Section 110.804.10 Supplemental Guidelines, Standards and Criteria. In addition to the standards and findings set forth in the Development Code, the Department of Community Development may prepare supplemental guidelines for the submission of applications and minimum standards and criteria for approval of applications.

Section 110.804.15 Review Procedures. The Board of Adjustment, the Planning Commission or a hearing examiner shall review variances in accordance with the provisions of this section.

(a) General Provisions. The Board of Adjustment, the Planning Commission or a hearing examiner shall conduct a public hearing with notification for the purpose of receiving oral and written evidence relative to the application. The evidence shall be reviewed to determine if the application is consistent with existing policies, standards and required findings.

(b) Concurrent Processing of Applications. A variance request related to additional Development Code action(s) which requires Board of Adjustment, Planning Commission or hearing examiner review shall be consolidated into one hearing before the appropriate approval authority for the major request being considered.

(c) Time Period for Hearing. Public hearings conducted by the Board of Adjustment, the Planning Commission or a hearing examiner shall be held within sixty-five (65) days from the date of acceptance of the complete application.

(d) Time Period for Action. The Board of Adjustment, the Planning Commission or a hearing examiner may take action on the proposed variance at the conclusion of the public hearing, but shall take action no later then ninety-five (95) days after the complete application was accepted. An extension of time for the Board of Adjustment, the Planning Commission or hearing examiner action may be granted if mutually agreed upon between the applicant and the Director of Community Development.

(e) Action. The Board of Adjustment, the Planning Commission or hearing examiner may take action to approve, approve with conditions, modify, modify with conditions, or deny the variance request. Failure of the Board of Adjustment, the Planning Commission or hearing examiner to hold a public hearing or take action within the time frames provided in this article shall constitute approval of the application.

(f) Effective Date of Action. Action on the variance application, unless otherwise specified, shall be effective upon expiration of the appeal period.

[Amended by Ord. 873, provisions eff. 6/7/93; Ord. 959, provisions eff. 7/26/96.]

Section 110.804.20 Notice. Notice shall be given in accordance with the provisions of this section.

(a) Notice of Property Owners by Mail. A notice setting forth the time, place, purpose of hearing, and map or physical description of the land involved shall be sent by mail at least ten (10) days before the meeting to the following persons:

(1) All owners of real property that are the subject of the variance;

(2) Advisory boards created by the Board of County Commissioners for the area in which the property that is the subject of the variance is located;

(3) All owners of real property:

(i) Within one hundred (100) feet of the property which is the subject of the variance when the variance request is for a deviation of thirty (30) percent or less; or

(ii) Within five hundred (500) feet of the property which is the subject of the variance when the variance request is for a deviation of thirty-one (31) percent or more.

(4) All tenants of any mobile home park that is located:

(i) Within one hundred (100) feet of the property which is the subject of the variance when the variance request is for a deviation of thirty (30) percent or less; or

(ii) Within five hundred (500) feet of the property which is the subject of the variance when the variance request is for a deviation of thirty-one (31) percent or more.

(5) All General Improvement Districts (GID) for the area in which the property that is the subject of the variance is located.

(6) The commander or administrator of a military installation, as defined in Article 902, that is within three thousand (3,000) feet of the property which is the subject of the variance application.

(b) Notice of Property Owners by Electronic Means. If requested by a party pursuant to subsection (a) of this section and if receipt can be verified, an electronic notice must be provided at least ten (10) days before the meeting, setting forth the time, place, purpose of hearing, and map or physical description of the land involved.

(c) Number of Notices. If the number of notices sent pursuant to this section does not identify thirty (30) or more separate property owners, the County shall send out additional notices to achieve a total of at least thirty (30) separate property owners. These notices shall be sent to owners of real property that are closest to the property in question, not including those owners provided notice pursuant to subsection (a) of this section.

(d) Compliance with Noticing Requirements. Owners of all real property to be noticed pursuant to this section shall be those owners identified on the latest County Assessor's ownership maps and records. Such notice is complied with when notice is sent to the last known addresses of such real property owners as identified in the latest County Assessor's records. Any person who attends the public hearing shall be considered to be legally noticed unless those persons can provide evidence that they were not notified according to the provisions of this section.

[Amended by Ord. 873, provisions eff. 6/7/93; Ord. 924, provisions eff. 2/6/95; Ord. 951, provisions eff. 6/7/96; Ord. 1088, provisions eff. 1/28/00; Ord. 1156, provisions eff. 3/22/02; Ord. 1347, provisions eff. 11/2/07.]

Section 110.804.25 Findings. Prior to approving an application for a variance, the Board of Adjustment, the Planning Commission or hearing examiner shall find that findings (a) through (d) apply to the property and, if a military installation is required to be noticed, finding (e):

(a) Special Circumstances. Because of the special circumstances applicable to the property, including either the:

(1) Exceptional narrowness, shallowness or shape of the specific piece of property, or

(2) By reason of exceptional topographic conditions, or

(3) Other extraordinary and exceptional situation or condition of the property and/or location of surroundings,

the strict application of the regulation results in exceptional and undue hardships upon the owner of the property;

(b) No Detriment. The relief will not create a substantial detriment to the public good, substantially impair affected natural resources or impair the intent and purpose of the Development Code or applicable policies under which the variance is granted;

(c) No Special Privileges. The granting of the variance will not constitute a grant of special privileges inconsistent with the limitations upon other properties in the vicinity and the identical regulatory zone in which the property is situated; and

(d) Use Authorized. The variance will not authorize a use or activity which is not otherwise expressly authorized by the regulation governing the parcel of property.

(e) Effect on a Military Installation. The variance will not have a detrimental effect on the location, purpose and mission of the military installation.

[Amended by Ord. 873, provisions eff. 6/7/93; Ord. 959, provisions eff. 7/26/96; Ord. 1108, provisions eff. 12/15/00; Ord. 1347, provisions eff. 11/2/07.]

Section 110.804.30 Projects of Regional Significance. If a variance approval is for a project of regional significance or if the approval would cause the project to become a project of regional significance, no permit for development or use of the property pursuant to the variance shall be issued until the Regional Planning Commission and/or the Regional Planning Governing Board has taken final action on the project of regional significance.

[Amended by Ord. 873, provisions eff. 6/7/93.]

Section 110.804.40 Appeals. An action of the Board of Adjustment, Planning Commission or hearing examiner made pursuant to this article may be appealed to the Board of County Commissioners in accordance with the provisions of Section 110.912.20 of the Development Code.

[Amended by Ord. 873, provisions eff. 6/7/93; Ord. 959, provisions eff. 7/26/96; Ord. 1156, provisions eff. 3/22/02; Ord. 1346, provisions eff. 11/2/07; Ord. 1555, provisions eff. 5/8/15.]

Section 110.804.45 One Year Wait on Denials. After the denial of a variance, no application for a variance for the same or similar regulation may be accepted for one (1) year immediately following the denial. This section shall not apply to applications denied without prejudice, which may be refiled within one (1) year.

[Amended by Ord. 873, provisions eff. 6/7/93.]

Section 110.804.50 Modification of a Variance. Modification of the terms of the approved variance itself or the waiver or alteration of conditions imposed incident to the granting of the variance shall require a new application following the same procedure required for the initial variance.

[Amended by Ord. 873, provisions eff. 6/7/93.]

Section 110.804.55 Expiration. A variance shall expire as provided in this section.

(a) Time Period. A variance shall expire and become null and void at the time specified therein. If no time is specified, the following shall apply:

(1) The variance shall expire and become null and void in eighteen (18) months after its effective date except where construction and/or use in reliance on such variance has commenced prior to its expiration; or

(2) The variance shall expire and become null and void in five (5) years if any required building permit associated with the variance has not been extended or has lapsed and become void.

(b) Extension. The time period in subsection (a) of this section may be extended for an addition of twelve (12) months by the Board of Adjustment or hearing examiner. Requests for time extensions shall be in writing and shall be submitted prior to the expiration date. The request shall state the reason for the extension.

[Amended by Ord. 873, provisions eff. 6/7/93; Ord. 959, provisions eff. 7/26/96.]

Section 110.804.60 Revocation. Revocation of a variance shall be subject to the requirements of this section.

(a) Initiation of Action. The Board of Adjustment or Board of County Commissioners may initiate an action to revoke a variance.

(b) Grounds for Revocation. A variance may be revoked pursuant to the provisions of this section upon a finding of any one (1) or more of the following grounds:

(1) That the variance approval was obtained or extended by fraud; or

(2) That one (1) or more of the conditions upon which such development approval was granted have been violated.

(c) Board of Adjustment Public Hearing. The Board of Adjustment shall hold a public hearing upon the revocation of the variance. The hearing shall be noticed in accordance with this article. The Board of Adjustment shall submit findings based on any one or more of the grounds listed in subsection (b) of this section and shall forward a recommendation on revocation to the Board of County Commissioners. The person or persons to whom the variance has been issued shall be notified of such recommendations not later than three (3) days after submission of the report to the Clerk of the Board of County Commissioners.

(d) Board of County Commissioners' Action. The Board of County Commissioners shall hold a public hearing upon the revocation of the variance. The hearing shall be noticed in accordance with this article. After the public hearing and consideration of the recommendation of the Board of Adjustment, the Board of County Commissioners may take action to revoke the variance. The action of the Board of County Commissioners shall be by an affirmative vote of a majority of the entire membership of the Board. In the case of a tie due to the absence of a member, the action shall be continued to a future meeting unless requested otherwise by the person to whom the variance was granted. The final action of the Board of County Commissioners shall be considered final for the purposes of judicial review.

[Amended by Ord. 873, provisions eff. 6/7/93; Ord. 1156, provisions eff. 3/22/02]

[Section 110.804.40 entitled "Standard Conditions" repealed by Ord. 873, provisions eff. 6/7/93. Section 110.804.35 entitled "Conformance with Chapter" amended by Ord. 873, provisions eff. 6/7/93 and repealed by Ord. 1040, provisions eff. 11/1/98.]

Article 806
VACATIONS AND ABANDONMENTS OF EASEMENTS OR STREETS

Sections:

110.806.00	**Purpose**
110.806.05	**Requirements for Application**
110.806.10	**Supplemental Guidelines, Standards and Criteria**
110.806.15	**Review Procedures of Planning Commission**
110.806.20	**Findings**
110.806.25	**Hearing of Appeal by Board**
110.806.30	**Notice of Board Hearing**
110.806.35	**Appeals to Board of County Commissions**
110.806.40	**Utility or Community Antenna Television Company Easement**
110.806.45	**Legal Description**
110.806.50	**Recordation**
110.806.55	**Sale of Vacated Portion**
110.806.60	**Payments**
110.806.65	**Light and Air**
110.806.70	**Reservations**
110.806.75	**Consistency with Plan**
110.806.80	**Reapplication**

Section 110.806.00 Purpose. The purpose of this article, Article 806, Vacations and Abandonments of Easements or Streets, is to provide for the vacation or abandonment of easements or streets.

Section 110.806.05 Requirements for Application. Applications for the vacation or abandonment of a street or easement owned by the County, or a government patent easement, may be initiated by the Board of County Commissioners, Planning Commission, the Director of Community Development or an owner of real property abutting an easement or public street right-of-way through an application to the Department of Community Development or as part of a tentative subdivision map application if the abandonment or vacation application is related to the tentative map proposal. If the application for the vacation or abandonment of an easement or street is included as part of a tentative subdivision application, the noticing of the tentative subdivision map application shall include a description of the street or easement to be vacated or abandoned. No application shall be processed when the information necessary to review and decide upon it is deemed to be incomplete by the Director of Community Development.

[Amended by Ord. 873, provisions eff. 6/7/93; Ord. 1041, provisions eff. 12/1/98; Ord. 1156, provisions eff. 3/22/02]

Section 110.806.10 Supplemental Guidelines, Standards and Criteria. In addition to the standards and findings set forth in the Development Code, the Director of Community Development may prepare supplemental guidelines for the submission of applications and minimum standards and criteria for approval of applications.

[Added by Ord. 873, provisions eff. 6/7/93.]

Section 110.806.15 Review Procedures of Planning Commission. The Planning Commission shall review applications for abandonments and vacations in accordance with the provisions of this section.

(a) General Provisions. The Planning Commission shall conduct a public hearing for the purpose of receiving evidence relative to the application. The evidence shall be reviewed to determine if the application is consistent with existing policies, standards and required findings.

(b) Time Period for Hearing and Action. The Planning Commission shall hold a public hearing on the application for vacation or abandonment of an easement or street not less than 10 business days after the newspaper notice as required below is first published.

(c) Notice of Planning Commission Hearing.

(1) Notice of Vacation or Abandonment, Only. Notice of a vacation or abandonment application to be heard by the Planning Commission shall be given by mailing to each owner of property abutting or connected to the proposed vacation or abandonment a notice of the proposed vacation or abandonment application through a delivery method that does not require signature of receipt of the notice by the abutting property owner, but does confirm delivery of the notice to the abutting property owner. Mailing of the notice shall occur at least 10 business days prior to the date of the Planning Commission's public hearing. Furthermore, a notice shall be published at least once in a newspaper of general circulation in the County not less than 10 business days prior to the date of the Planning Commission's public hearing.

(2) Notice of Vacation or Abandonment Combined with Tentative Subdivision Map Application. If the vacation or abandonment application is part of a tentative subdivision map application, the notice of the proposed vacation or abandonment shall be contained in the notice for the tentative subdivision map, and each owner of property abutting or connected to the proposed vacation or abandonment shall be provided notice of the combined proposed vacation or abandonment and tentative subdivision notice pursuant to the requirements of subsection (1). Notice shall be published at least once in a newspaper of general circulation in the County pursuant to the requirements of subsection (1).

(3) Notice of Public Utility and Community Antenna Television Company. Each public utility as defined in NRS 360.815 and each community antenna television company as defined in NRS 711.030 serving the area in which an easement or street is proposed to be abandoned shall receive a notice no later than 10 business days prior to the date of the Planning Commission's public hearing on the application. Accompanying the application shall be a request that the public utility and/or community antenna television company indicate in writing whether that entity wishes to have an easement for its purposes provided.

(d) Action by the Planning Commission. Except as provided in Section 110.806.40, if, upon public hearing, the Planning Commission is satisfied that the public will

not be materially injured by the proposed vacation, it shall order the street or easement vacated. The Planning Commission may make the order conditional, and the order becomes effective only upon the fulfillment of the conditions prescribed. Notwithstanding the final decision of the Planning Commission, if a public utility and/or community antenna television company requests an easement for its purposes pursuant to the notice provided in subsection (c)(3), an easement in favor of the public utility and/or community antenna television company shall be provided and the County shall ensure recordation of same.

[Added by Ord. 873, provisions eff. 6/7/93. Amended by Ord. 1041, provisions eff. 12/1/98; Ord. 1288, provisions eff. 3/24/06; Ord. 1346 and 1347, provisions eff. 11/2/07; Ord. 1555, provisions eff. 5/8/15.]

Section 110.806.20 Findings. Prior to recommending approval of an application for an abandonment or vacation, the Planning Commission shall find that all of the following are true:

(a) Master Plan. The abandonment or vacation is consistent with the policies, action programs, standards and maps of the Master Plan and the applicable area plans;

(b) No Detriment. The abandonment or vacation does not result in a material injury to the public; and

(c) Existing Easements. Existing public utility easements in the area to be abandoned or vacated can be reasonably relocated to provide similar or enhanced service.

[Added by Ord. 873, provisions eff. 6/7/93. Amended by Ord. 1156, provisions eff. 3/22/02; Ord. 1447, provisions eff. 9/9/10.]

Section 110.806.35 Appeals to Board of County Commissioners.

(a) An appeal of the Planning Commission's decision regarding a vacation or abandonment of an easement or street may be appealed to the Board of County Commissioners following the procedure set out in WCC 110.912.20 of the Development Code.

(b) Except as provided in Section 110.806.40, if, upon public hearing on the appeal of the Planning Commission's final action on an abandonment or vacation of an easement or street, the Board is satisfied that the public will not be materially injured by the proposed vacation, it shall order the street or easement vacated. The Board may make the order conditional, and the order becomes effective only upon the fulfillment of the conditions prescribed. The action of the Board of County Commissioners shall be final for the purposes of judicial review. Notwithstanding the final decision of the Board of County Commissioners, if a public utility and/or community antenna television company requests an easement for its purposes pursuant to the notice provided in subsection 110.806.15(c)(3), an easement in favor of the public utility and/or community antenna television company shall be provided and the County shall ensure recordation of same.

[Amended by Ord. 873, provisions eff. 6/7/93; Ord. 1041, provisions eff. 12/1/98; Ord. 1156, provisions eff. 3/22/02; Ord. 1347, provisions eff. 11/2/07; Ord. 1555, provisions eff. 5/8/15.]

Section 110.806.40 Utility or Community Antenna Television Company Easement. If a public utility or community antenna television company has an easement over the property, the

Planning Commission or the Board, after a hearing on the appeal of the Planning Commission final action, shall provide in its order for the continuation of that easement.

[Amended by Ord. 873, provisions eff. 6/7/93; Ord. 1041, provisions eff. 12/1/98; Ord. 1347, provisions eff. 11/2/07.]

Section 110.808.45 Appeals. An action of the hearing examiner or Board of Adjustment made pursuant to this article may be appealed to the Board of County Commissioners in accordance with the provisions of Section 110.912.20 of the Development Code.

[Added by Ord. 873, provisions eff. 6/7/93; Ord. 1041, provisions eff. 12/1/98; Ord. 1555, provisions eff. 5/8/15.]

Section 110.806.50 Recordation. The order must be recorded in the Office of the County Recorder if all the conditions of the order have been fulfilled and, upon the recordation, title to the street or easement reverts to the abutting property owners in the approximate proportion that the property was dedicated by the abutting property owners or their predecessors in interest.

[Amended by Ord. 873, provisions eff. 6/7/93; Ord. 1041, provisions eff. 12/1/98.]

Section 110.806.55 Sale of Vacated Portion. In the event of a partial vacation of a street where the vacated portion is separated from the property from which it was acquired by the unvacated portion of it, the Board may sell the vacated portion upon such terms and conditions as it deems desirable and in the best interests of the County. If the Board sells the vacated portion, it shall afford the right of first refusal to each abutting property owner as to that part of the vacated portion which abuts his/her property, but no action may be taken by the Board to force the owner to purchase the portion and that portion may not be sold to any person other than the owner if the sale would result in a complete loss of access to a street from the abutting property.

[Amended by Ord. 873, provisions eff. 6/7/93; Ord. 1041, provisions eff. 12/1/98.]

Section 110.806.60 Payments. If the street was acquired by dedication from the abutting property owners or their predecessors in interest, no payment is required for title to the proportionate part of the street reverted to each abutting property owner. If the street was not acquired by dedication, the Planning Commission or Board, after a hearing on an appeal of the Planning Commission's final action, may make its order conditional upon payment by the abutting property owners for their proportionate part of the street of such consideration as the Planning Commission or Board, after a hearing on an appeal of the Planning Commission's final action, determines to be reasonable. If the Planning Commission or Board, after a hearing on an appeal of the Planning Commission's final action, determines that the vacation has a public benefit, it may apply the benefit as an offset against any determination of reasonable consideration which did not take into account the public benefit.

[Amended by Ord. 873, provisions eff. 6/7/93; Ord. 1041, provisions eff. 12/1/98.]

Section 110.806.65 Light and Air. Any easement for light and air adjacent to any vacated street is vacated upon the vacation of the street.

[Amended by Ord. 873, provisions eff. 6/7/93; Ord. 1041, provisions eff. 12/1/98.]

Section 110.806.70 Reservations. In any vacation or abandonment of any street or portion of it, the Planning Commission or Board, after a hearing on an appeal of the Planning Commission's final action, may reserve and except therefrom any easements, rights, or interests therein which it deems desirable for the use of the County or any public utility. The abandonment or vacation of a

government patent easement pursuant to this section addresses only the County's interest in the subject easement and cannot be relied upon for purposes of clearing title to the property.

[Amended by Ord. 873, provisions eff. 6/7/93; Ord. 1041, provisions eff. 12/1/98; Ord. 1156, provisions eff. 3/22/02]

Section 110.806.75 Consistency with Plan. No procedures or approvals that are provided for in this article may be in contravention to the Master Plan.

[Amended by Ord. 873, provisions eff. 6/7/93; Ord. 1041, provisions eff. 12/1/98; Ord. 1447, provisions eff. 9/9/10.]

Section 110.806.80 Reapplication. When an application for a vacation or abandonment of an easement or street has been denied, a subsequent application for the same easement or street right-of-way shall not be submitted for the next six (6) consecutive months commencing from the date of the final action by the Planning Commission or Board of County Commissioners, whichever is later.

[Amended by Ord. 873, provisions eff. 6/7/93; Ord. 1041, provisions eff. 12/1/98.]

[Section 110.806.10, entitled "Recommendation by Planning Commission" repealed by Ord. 873, provisions eff. 6/7/93. Section 110.806.25 entitled "Transmittal of Planning Commission Recommendation to Board of County Commissioners" added by Ord. 873, provisions eff. 6/7/93 and repealed by Ord. 1041, provisions eff. 12/1/98.]

Article 808
ADMINISTRATIVE PERMITS

Sections:

110.808.00	**Purpose**
110.808.05	**Requirements for Application**
110.808.10	**Supplemental Guidelines, Standards and Criteria**
110.808.15	**Concurrent Processing**
110.808.20	**Projects of Regional Significance**
110.808.25	**Findings**
110.808.30	**Review Procedures**
110.808.35	**Review by the Hearing Examiner**
110.808.40	**Review by the Board of Adjustment**
110.808.45	**Appeals**
110.808.50	**One Year Wait on Denials**
110.808.55	**Modification of an Administrative Permit**
110.808.60	**Expiration**
110.808.65	**Revocation**

Section 110.808.00 Purpose. The purpose of this article, Article 808, Administrative Permits, is to provide methods for reviewing proposed uses which possess characteristics that require special appraisal in order to determine if the uses have the potential to adversely affect other land uses, transportation or facilities in the vicinity. The Board of County Commissioners, the Board of Adjustment, or the hearing examiner, as established in Article 912, Establishment of Commissions, Boards and Hearing Examiners, may require conditions of approval necessary to eliminate, mitigate, or minimize to an acceptable level any potentially adverse effects of a use or to specify the terms under which commencement and operation of the use must comply.

[Amended by Ord. 873, provisions eff. 6/7/93; Ord. 1040, provisions eff. 11/1/98; Ord. 1234, provisions eff. 5/21/04.]

Section 110.808.05 Requirements for Application. Applications for administrative permits may be initiated by the property owner or authorized agent of the property owner. Applications shall be filed with the Department of Community Development. A request for an administrative permit shall include a site plan which clearly delineates the location and characteristics of the proposed use. No administrative permit shall be processed until the information necessary to review and decide upon the proposed administrative permit is deemed complete by the Department of Community Development.

[Amended by Ord. 873, provisions eff. 6/7/93; Ord. 1040, provisions eff. 11/1/98.]

Section 110.808.10 Supplemental Guidelines, Standards and Criteria. In addition to the standards and findings set forth in the Development Code, the Department of Community Development may prepare supplemental guidelines for the submission of applications and minimum standards and criteria for approval of applications.

Section 110.808.15 Concurrent Processing. An administrative permit application which also requires additional action by the Board of Adjustment or Planning Commission, such as a

variance or special use permit, shall be consolidated into one review before the appropriate approval authority. Subsequent references to the hearing examiner or the Board of Adjustment within this article will also apply to the Planning Commission when that body is the approval authority.

[Added by Ord. 1040, provisions eff. 11/1/98. Amended by Ord. 1234, provisions eff. 5/21/04.]

Section 110.808.20 Projects of Regional Significance. If an administrative permit approval is for a project of regional significance or if the approval would cause the project to become a project of regional significance, no permit for development or use of the property pursuant to the administrative permit shall be issued until the Regional Planning Commission and/or the Regional Planning Governing Board has taken final action on the project of regional significance.

[Renumbered from 110.808.30 and amended by Ord. 873, provisions eff. 6/7/93.]

Section 110.808.25 Findings. Prior to approving an application for an administrative permit, the hearing examiner or the Board of Adjustment shall find that all of the following, if applicable, are true:

(a) Consistency. The proposed use is consistent with the policies, action programs, standards and maps of the Master Plan and the applicable area plan;

(b) Improvements. Adequate utilities, roadway improvements, sanitation, water supply, drainage, and other necessary facilities have been or will be provided, the proposed improvements are properly related to existing and proposed roadways, and an adequate public facilities determination has been made in accordance with Division Seven;

(c) Site Suitability. The site is physically suitable for the type of development and for the intensity of the development;

(d) Issuance Not Detrimental. Issuance of the permit will not be significantly detrimental to the public health, safety or welfare; injurious to the property or improvements of adjacent properties; or detrimental to the character of the surrounding area; and

(e) Effect on a Military Installation. If a military installation is required to be noticed pursuant to this article, the effect of the issuance of the permit will not be detrimental to the location, purpose and mission of the military installation.

[Renumbered from 110.808.40 by Ord. 873, provisions eff. 6/7/93; renumbered from 110.808.30 by Ord. 1040, provisions eff. 11/1/98. Amended by Ord. 1234, provisions eff. 5/21/04; Ord. 1347, provisions eff. 11/2/07; Ord. 1447, provisions eff. 9/9/10.]

Section 110.808.30 Review Procedures. Two separate review procedures are available for the processing of administrative permits. These review procedures shall not be administered concurrently.

(a) Hearing Examiner Review. The first procedure, review by the hearing examiner, requires an applicant for an administrative permit to obtain the written consent of the administrative permit from each owner of any real property that would be affected and, unless appealed, does not require a public hearing. The procedures in Section 110.808.35 shall be followed.

(b) Board of Adjustment Review. The second procedure requires a public hearing before the Board of Adjustment and is similar to the process for a special use permit, although the review time is shortened. The procedures in Section 110.808.40 shall be followed.

[Amended by Ord. 873, provisions eff. 6/7/93. Renumbered from 110.808.15 and amended by Ord. 1040, provisions eff. 11/1/98. Amended by Ord. 1234, provisions eff. 5/21/04.]

Section 110.808.35 Review by the Hearing Examiner. The hearing examiner shall review administrative permits and take the appropriate action in accordance with the provisions of this section. The hearing examiner may approve, approve with conditions, modify, modify with conditions, or deny the administrative permit request. All decisions of the hearing examiner shall be in writing.

(a) Affected Property Owners. Upon receipt of a complete application, the hearing examiner shall determine the owners of real property that may be affected by the proposed use and provide the applicant with a written list and a consent form for signature within five (5) working days of receipt. All property owners within five hundred (500) feet of the proposed use, homeowners associations or Architectural Control Committees that are registered with the Building and Safety Division of the County; and all military installations as defined in Article 902 that are within three thousand (3,000) feet of the property that is the subject of the administrative permit application will be considered affected property owners.

(b) Written Consent. The applicant for the administrative permit shall obtain the signature of all affected property owners on the consent forms provided by the hearing examiner. Once all signatures have been obtained, the applicant shall submit the consent forms to the Department of Community Development.

(c) Processing. Upon receipt of the signed consent forms forwarded to affected property owners, the hearing examiner shall commence processing the administrative permit. The hearing examiner shall review the administrative permit to determine its consistency with existing policies, standards and required findings. A decision shall be rendered within five (5) working days of receipt of the signed consent forms. An extension of time for hearing examiner action may be granted in writing if mutually agreed upon by the applicant and the hearing examiner. No hearing is required for the completion of this process.

(d) Effective Date of Action. Action on the administrative permit application, unless otherwise specified, shall be effective upon expiration of the appeal period.

(e) Notice of Decision.

(1) Recipients of Notice - Approval. Within five (5) working days of approval or conditional approval by the hearing examiner, the following persons shall be notified by mail of the final decision on the administrative permit:

(i) All individuals with addresses listed on the application for the administrative permit and the property owner.

(ii) All affected property owners for whom consent signatures were required.

(iii) Advisory boards created by the Board of County Commissioners for the area in which the property that is the subject of the administrative permit is located.

(iv) All General Improvement Districts (GIDs) for the area in which the property that is the subject of the administrative permit is located.

(2) Recipients of Notice - Denial. Within five (5) working days of the denial of the request by the hearing examiner, the following persons shall be notified by mail of the final decision on the administrative permit:

(i) All individuals with addresses listed on the application for the administrative permit and the property owner.

(ii) All affected property owners for whom consent signatures were required.

(3) Contents of Notice - Approval or Denial. Such notice shall describe the proposed administrative permit request; describe the lot, parcel, properties, or area that are the subject of the administrative permit; describe the decision of the hearing examiner and, if the administrative permit has been approved, any conditions made part of the administrative permit; the appellate procedures that can be taken regarding the decision of the hearing examiner; and the closing date of filing an appeal of the decision.

(4) Compliance with Noticing Requirements. All owners of real property to be noticed pursuant to this section shall be those owners identified on the latest ownership maps and records of the Washoe County Assessor. Compliance with the noticing requirements is established when notice is mailed to the last known address listed on the records of the Assessor, or if requested by a party to whom notice must be provided, by electronic means if receipt of such an electronic notice can be verified.

[Added by Ord. 1040, provisions eff. 11/1/98. Amended by Ord. 1088, provisions eff. 1/28/00; Ord 1234, provisions eff. 5/21/04; Ord. 1347, provisions eff. 11/2/07.]

Section 110.808.40 Review by the Board of Adjustment. The Board of Adjustment, or the Planning Commission on concurrent applications requiring their review, shall review administrative permits in accordance with the provisions of this section.

(a) General Provisions. The Board of Adjustment shall conduct a public hearing with notification for the purpose of receiving oral and written evidence relative to the application. The evidence shall be reviewed to determine if the application is consistent with existing policies, standards and required findings.

(b) Time Period for Hearing. Public hearings before the Board of Adjustment shall be held at the next available meeting for which the requirements of noticing can be satisfied. Such time frame shall consider the time necessary to circulate the applications to the reviewing agencies, prepare the notices, obtain the mailing labels, and deliver the notices to the required individuals, but shall not exceed fifty (50) days.

(c) Notice. Notice shall be given in accordance with the provisions of this section.

(1) Notice of Property Owners by Mail. A notice setting forth the time, place, purpose of hearing, and map or physical description of the land involved shall be sent by mail at least ten (10) days before the meeting to the following persons:

(i) All owners of real property that are the subject of the administrative permit.

(ii) Advisory boards created by the Board of County Commissioners for the area in which the property that is the subject of the administrative permit is located.

(iii) All owners of real property within five hundred (500) feet of the property which is the subject of the administrative permit.

(iv) All tenants of any mobile home park that is located within five hundred (500) feet of the property which is the subject of the administrative permit.

(v) All General Improvement Districts (GIDs) for the area in which the property that is the subject of the administrative permit is located.

(vi) The commander or administrator of a military installation, as defined in Article 902, that is located within three thousand (3,000) feet of the property which is the subject of the administrative permit application.

(2) Notice of Property Owners by Electronic Means. If requested by a party pursuant to subsection (a) of this section and if receipt can be verified, an electronic notice must be provided at least ten (10) days before the meeting, setting forth the time, place, purpose of hearing, and map or physical description of the land involved.

(3) Number of Notices. If the number of notices sent pursuant to this section does not total thirty (30) or more, the County shall send out additional notices to make the total number at least thirty (30). These notices shall be sent to owners of real property that are closest to the property in question, not including those owners engaged in acquiring the administrative permit.

(4) Compliance with Noticing Requirements. All owners of real property to be noticed pursuant to this section shall be those owners identified on the latest ownership maps and records of the County Assessor. Compliance with the noticing requirements is established when notice is sent to the last known address on the records of the County Assessor.

(d) Time Period for Action. The Board of Adjustment shall take action on the proposed administrative permit at the conclusion of the public hearing. An extension of time for the Board of Adjustment action may be granted if mutually agreed upon by the applicant and the Board of Adjustment.

(e) Action. The Board of Adjustment may take action to approve, approve with conditions, modify, modify with conditions, or deny the administrative permit request. Failure of the Board of Adjustment to hold a public hearing or take action within the specified time frames shall constitute an automatic appeal to the Board of County Commissioners.

(f) Effective Date of Action. Action on the administrative permit application, unless otherwise specified, shall be effective upon expiration of the appeal period.

[Added by Ord. 1040, provisions eff. 11/1/98. Amended by Ord. 1088, provisions eff. 1/28/00; Ord. 1234, provisions eff. 5/21/04; Ord. 1347, provisions eff. 11/2/07.]

Section 110.808.45 Appeals. An action of the hearing examiner or Board of Adjustment made pursuant to this article may be appealed to the Board of County Commissioners in accordance with the provisions of Section 110.912.20 of the Development Code.

[Renumbered from 110.808.55 and amended by Ord. 873, provisions eff. 6/7/93. Renumbered from 110.808.40 and amended by Ord. 1040, provisions eff. 11/1/98. Amended by Ord. 1234, provisions eff. 5/21/04; Ord. 1346, provisions eff. 11/2/07; Ord. 1555, provisions eff. 5/8/15.]

Section 110.808.50 One Year Wait on Denials. After the denial of an administrative permit, no application for an administrative permit for the same or similar use may be accepted for one (1) year immediately following the denial. This section shall not apply to applications denied without prejudice, which may be refiled within one (1) year.

[Renumbered from 110.808.60 by Ord. 873, provisions eff. 6/7/93. Renumbered from 110.808.45 by Ord. 1040, provisions eff. 11/1/98.]

Section 110.808.55 Modification of an Administrative Permit. Proposed modifications of approved administrative permits shall be subject to the requirements in this section.

(a) Required Conditions. The Director of Community Development may approve plans for an alteration of the approved use when the alteration complies with all of the following conditions:

(1) The building or use expansion is incidental to the existing use;

(2) The building or use expansion does not result in a change of use;

(3) No building expansion involves more than ten (10) percent increase in floor area covered by existing structures associated with the use;

(4) No use expansion involves more than ten (10) percent increase in the overall site area covered by the existing use;

(5) The building or use expansion, in the opinion of the Director of Community Development, would not have a substantial adverse effect on adjacent property; and

(6) The building or use expansion complies with existing requirements of agencies having jurisdiction and any other appropriate regulatory agency as determined by the Director of Community Development.

(b) Conditions Not Met. If a proposed expansion does not comply with the conditions in subsection (a) of this section, a new permit shall be required following the same procedure required for the initial application.

(c) New Permit Required. Modification of the terms of the approved administrative permit itself or the waiver or alteration of conditions imposed incident to the granting of the permit shall require a new application following the same procedure required for the initial permit.

[Renumbered from 110.808.65 and amended by Ord. 873, provisions eff. 6/7/93. Renumbered from 110.808.50 by Ord. 1040, provisions eff. 11/1/98.]

Section 110.808.60 Expiration. An administrative permit shall expire as provided in this section.

(a) Time Period. An administrative permit shall expire and become null and void at the time specified in the permit, or if not specified, two (2) years from the final date of approval.

(b) Extension. The time specified in the administrative permit may be extended by the hearing examiner. Requests for time extensions shall be in writing and shall be submitted prior to the expiration date. The request shall state the reason for the extension.

(c) Discontinuance. An administrative permit shall expire and become null and void twelve (12) months after the purpose for which it was granted has been discontinued or abandoned. During this twelve (12) month period, any operational conditions of approval shall remain in force and effect.

[Renumbered from 110.808.70 and amended by Ord. 873, provisions eff. 6/7/93. Renumbered from 110.808.55 by Ord. 1040, provisions eff. 11/1/98. Amended by Ord. 1234, provisions eff. 5/21/04.]

Section 110.808.65 Revocation. Revocation of an administrative permit shall be subject to the requirements of this section.

(a) Initiation of Action. The hearing examiner, Board of Adjustment, Planning Commission, or Board of County Commissioners may initiate an action to revoke an administrative permit.

(b) Grounds for Revocation. An administrative permit may be revoked pursuant to the provisions of this section upon a finding of any one (1) or more of the following grounds:

(1) That the administrative permit approval was fraudulently obtained or extended;

(2) That one (1) or more of the conditions upon which such development approval was granted have been violated; or

(3) That the use or facility for which the development approval was granted is so conducted or maintained as to be detrimental to the public health or safety, or as to be a public nuisance.

(c) Action by the Board of County Commissioners. The Board of County Commissioners shall hold a public hearing upon the revocation of the

administrative permit. The hearing shall be noticed in accordance with Section 110.808.40. After the public hearing, and upon considering the evidence submitted, the Board of County Commissioners may take action to revoke the administrative permit.

[Renumbered from 110.808.75 and amended by Ord. 873, provisions eff. 6/7/93. Renumbered from 110.808.60 and amended by Ord. 1040, provisions eff. 11/1/98. Amended by Ord. 1234, provisions eff. 5/21/04.]

[Section 110.808.20 entitled "Notice", Section 110.808.25 entitled "Public Comment" and Section 110.808.45 entitled "Standard Conditions" repealed by Ord. 873, provisions eff. 6/7/93. Section 110.808.25 entitled "Conformance with Chapter" renumbered from 110.808.35 and repealed by Ord. 1040, provisions eff. 11/1/98.

Section 110.808.35 entitled "Notice of Decision" renumbered from 110.808.50 and amended by Ord. 873, provisions eff. 6/7/93.]

Article 810
SPECIAL USE PERMITS

Sections:

110.810.00	**Purpose**
110.810.05	**Review of Special Use Permits**
110.810.10	**Requirements for Application**
110.810.15	**Supplemental Guidelines, Standards and Criteria**
110.810.20	**Review Procedures**
110.810.25	**Notice**
110.810.30	**Findings**
110.810.35	**Development of Natural Resources**
110.810.40	**Projects of Regional Significance**
110.810.42	**Hazardous Materials**
110.810.50	**Appeals**
110.810.55	**One Year Wait on Denials**
110.810.60	**Modification of a Special Use Permit**
110.810.65	**Expiration**
110.810.70	**Revocation**

Section 110.810.00 Purpose. The purpose of this article, Article 810, Special Use Permits, is to provide a method of reviewing proposed uses as listed in Article 302, Allowed Uses, which possess characteristics that require special appraisal in order to determine if the uses have the potential to adversely affect other land uses, transportation systems, or public facilities in the vicinity. The Planning Commission, Board of Adjustment or hearing examiner may require conditions of approval necessary to eliminate or minimize to an acceptable level any potentially adverse effects of the use.

[Amended by Ord. 873, provisions eff. 6/7/93; Ord. 1234, provisions eff. 5/21/04.]

Section 110.810.05 Review of Special Use Permits. Section 110.302.15 and Section 110.810.20(b) of this Development Code shall be used to determine whether the Planning Commission, the Board of Adjustment or a hearing examiner shall review an application for a special use permit according to the procedures of this article.

[Amended by. 1234, provisions eff. 5/21/04.]

Section 110.810.10 Requirements for Application. Applications for special use permits may be initiated by the Board of County Commissioners, a property owner or the property owner's authorized agent. Applications shall be filed with the Department of Community Development. A request for a special use permit shall include a site plan which clearly delineates the location and characteristics of the proposed use. No special use permit shall be processed until the information necessary to review and decide upon the proposed special use permit is deemed complete by the Director of Community Development.

[Amended by Ord. 873, provisions eff. 6/7/93.]

Section 110.810.15 Supplemental Guidelines, Standards and Criteria. In addition to the standards and findings set forth in the Development Code, the Department of Community Development may prepare supplemental guidelines for the submission of applications and minimum standards and criteria for approval of applications.

Section 110.810.20 Review Procedures. The Planning Commission, Board of Adjustment or a hearing examiner shall review special use permits in accordance with the provisions of this section.

(a) General Provisions. The Planning Commission, Board of Adjustment or a hearing examiner shall conduct a public hearing with notification for the purpose of receiving oral and written evidence relative to the application. The evidence shall be reviewed to determine if the application is consistent with existing policies, standards and required findings.

(b) Concurrent Processing of Applications. A special use permit request related to additional Development Code action(s) which requires Board of Adjustment, Planning Commission or hearing examiner review shall be consolidated into one hearing before the appropriate approval authority for the major request being considered.

(c) Time Period for Hearing. Public hearings conducted by the Planning Commission, Board of Adjustment or a hearing examiner shall be held within sixty-five (65) days from the date of acceptance of the complete application.

(d) Time Period for Action. The Planning Commission, Board of Adjustment or a hearing examiner may take action on the proposed special use permit at the conclusion of the public hearing, but shall take action no later than ninety-five (95) days after the complete application was accepted. An extension of time for Planning Commission, Board of Adjustment or hearing examiner action may be granted if mutually agreed upon between the applicant and the Director of Community Development.

(e) Action. The Planning Commission, Board of Adjustment or a hearing examiner may take action to approve, approve with conditions, modify, modify with conditions, or deny the special use permit request. The Planning Commission, Board of Adjustment or a hearing examiner may also vary standards of the Development Code as part of the approval of a special use permit application. Failure of the Planning Commission, Board of Adjustment or a hearing examiner to hold a public hearing or take action within the time frames provided in this article shall constitute approval of the application.

(f) Effective Date of Action. Action on the special use permit application, unless otherwise specified, shall be effective upon expiration of the appeal period.

[Amended by Ord. 873, provisions eff. 6/7/93; Ord. 1156, provisions eff. 3/22/02; Ord. 1234, provisions eff. 5/21/04, Ord. 1378, provisions eff. 8/1/08.]

Section 110.810.25 Notice. Notice shall be given in accordance with the provisions of this section.

(a) Notice of Property Owners by Mail. A notice setting forth the time, place, purpose of hearing, and map or physical description of the land involved shall be sent by mail at least ten (10) days before the meeting to the following persons:

(1) All owners of real property that are the subject of the special use permit.

(2) Advisory boards created by the Board of County Commissioners for the area in which the property that is the subject of the special use permit is located.

(3) All owners of real property:

(i) Within five hundred (500) feet of the property which is the subject of the special use permit; or

(ii) Within seven hundred fifty (750) feet of the property which is the subject of a special use permit for a project of regional significance.

(4) All tenants of any mobile home park that is located:

(i) Within five hundred (500) feet of the property which is the subject of the special use permit; or

(ii) Within seven hundred fifty (750) feet of the property which is the subject of a special use permit for a project of regional significance.

(5) All General Improvement Districts (GID) for the area in which the property that is the subject of the special use permit is located.

(6) The commander or administrator of a military installation, as defined in Article 902, that is within three thousand (3,000) feet of the property that is the subject of the special use permit application.

(b) Notice of Property Owners by Electronic Means. If requested by a party pursuant to subsection (a) of this section and if receipt can be verified, an electronic notice must be provided at least ten (10) days before the meeting, setting forth the time, place, purpose of hearing, and map or physical description of the land involved.

(c) Number of Notices. If the number of notices sent pursuant to this section does not identify thirty (30) or more separate property owners, the County shall send out additional notices to achieve a total of at least thirty (30) separate property owners. These notices shall be sent to owners of real property that are closest to the property in question, not including those owners provided notice pursuant to subsection (a) of this section.

(d) Compliance with Noticing Requirements. Owners of all real property to be noticed pursuant to this section shall be those owners identified on the latest County Assessor's ownership maps and records. Such notice is complied with when notice is sent to the last known addresses of such real property owners as identified in the latest County Assessor's records. Any person who attends the public hearing shall be considered to be legally noticed unless those persons can provide evidence that they were not notified according to the provisions of this section.

[Amended by Ord. 873, provisions eff. 6/7/93; Ord. 924, provisions eff. 2/6/95; Ord. 951, provisions eff. 6/7/96; Ord. 1088, provisions eff. 1/28/00; Ord. 1156, provisions eff. 3/22/02; Ord. 1347, provisions eff. 11/2/07.]

Section 110.810.30 Findings. Prior to approving an application for a special use permit, the Planning Commission, Board of Adjustment or a hearing examiner shall find that all of the following are true:

(a) Consistency. The proposed use is consistent with the action programs, policies, standards and maps of the Master Plan and the applicable area plan;

(b) Improvements. Adequate utilities, roadway improvements, sanitation, water supply, drainage, and other necessary facilities have been provided, the proposed improvements are properly related to existing and proposed roadways, and an adequate public facilities determination has been made in accordance with Division Seven;

(c) Site Suitability. The site is physically suitable for the type of development and for the intensity of development;

(d) Issuance Not Detrimental. Issuance of the permit will not be significantly detrimental to the public health, safety or welfare; injurious to the property or improvements of adjacent properties; or detrimental to the character of the surrounding area; and

(e) Effect on a Military Installation. Issuance of the permit will not have a detrimental effect on the location, purpose or mission of the military installation.

[Amended by Ord. 873, provisions eff. 6/7/93; Ord. 1234, provisions eff. 5/21/04; Ord. 1347, provisions eff. 11/2/07; Ord. 1447, provisions eff. 9/9/10.]

Section 110.810.35 Development of Natural Resources. All natural resources development shall require a special use permit reviewed by the Board of Adjustment. Natural resources development includes energy production, mining operations, petroleum gas extraction, and forest products production. In addition to the findings required in other sections of this article, issuance of a special use permit for development of natural resources shall be contingent on the Board of Adjustment making the following findings:

(a) That the proposed development is not unduly detrimental to surrounding properties, land uses and the environment in general;

(b) That the proposed development will not unduly block scenic views or degrade any surrounding scenic resources; and

(c) That the proposed development will reclaim the site and all affected areas at the conclusion of the operation.

[Amended by Ord. 873, provisions eff. 6/7/93, Ord. 1378, provisions eff. 8/1/08.]

Section 110.810.40 Projects of Regional Significance. If a special use permit approval is for a project of regional significance or if the approval would cause the project to become a project of regional significance, no permit for development or use of the property pursuant to the special use permit shall be issued until the Regional Planning Commission and/or the Regional Planning

Governing Board has taken final action on the project of regional significance.

[Amended by Ord. 873, provisions eff. 6/7/93.]

Section 110.810.42 Hazardous Materials. Hazardous materials uses and types as defined in NRS 459.3816 and as permitted as a General Industrial Use-Heavy in Article 302 shall require a special use permit in accordance with the provisions of this section, except that mining and aggregate operations are excluded from these provisions.

(a) Requirements for Application. Applications for a special use permit may be initiated by the Board of County Commissioners, a property owner or the property owner's authorized agent. Applications shall be filed with the Department of Community Development. A request for a special use permit shall include a site plan which clearly delineates the location and characteristics of the proposed use and the type of hazardous material to be manufactured, used and/or stored. No special use permit shall be processed until the information necessary to review and decide upon the proposed special use permit is deemed complete by the Director of Community Development.

(b) Planning Commission Review Procedures. The Planning Commission shall first review the special use permit in accordance with the provisions of this section.

(1) General Provisions. The Planning Commission shall conduct a public hearing with notification for the purpose of receiving oral and written evidence relative to the application. The evidence shall be reviewed to determine if the application is consistent with existing policies, standards and required findings.

(2) Concurrent Processing of Applications. A special use permit request related to additional Development Code action(s) which requires Board of Adjustment or hearing examiner review shall be consolidated into one hearing before the Planning Commission.

(3) Consultation. The following persons and organizations shall be consulted prior to the public hearing:

(i) The Washoe County Director of Emergency Management and Homeland Security;

(ii) The Administrator of the Division of Environmental Protection of the Nevada State Department of Conservation and Natural Resources;

(iii) The Nevada State Fire Marshal;

(iv) The Administrator of the Division of Industrial Relations of the Nevada State Department of Business and Industry;

(v) The commander or administrator of a military installation, as defined in Article 902, that is within three thousand (3,000) feet of the property that is the subject of the special use permit application; and

(vi) The governing body of any city or county that may be affected by the issuance of the special use permit.

(4) Time Period for Hearing. The public hearing conducted by the Planning Commission shall be held within ninety (90) days from the date of acceptance of the complete application.

(5) Time Period for Action. The Planning Commission may take action on the proposed special use permit at the conclusion of the public hearing, but shall take action no later than ninety (90) days after the complete application was accepted. An extension of time for action may be granted if mutually agreed upon between the applicant and the Director of Community Development.

(6) Action. The Planning Commission may take action to recommend to the Board of County Commissioners approval, approval with conditions, modification, modification with conditions, or denial of the special use permit request. The Planning Commission may also vary standards of the Development Code as part of the approval of a special use permit application. Failure of the Planning Commission to hold a public hearing or take action within the time frames provided in this article shall constitute a recommendation of approval of the application.

(7) Transmittal of Recommendation to Board of County Commissioners. Within thirty (30) days of the action taken by the Planning Commission, that action shall be transmitted to the Clerk of the Board of County Commissioners for the scheduling of a public hearing by the Board of County Commissioners.

(c) Notice of Planning Commission Public Hearing. Notice shall be given in accordance with the provisions of this section.

(1) Notice by Mail. A notice setting forth the time, place, purpose of hearing, map or physical description of the land involved, and description of all explosives to be located on the property shall be sent by mail at least thirty (30) days before the meeting to the following persons:

(i) All owners of real property that are the subject of the special use permit;

(ii) Advisory boards created by the Board of County Commissioners for the area in which the property that is the subject of the special use permit is located;

(iii) All owners of real property within one thousand (1,000) feet of the property which is the subject of the special use permit;

(iv) All tenants of any mobile home park that is located within one thousand (1,000) feet of the property which is the subject of the special use permit;

(v) All General Improvement Districts (GIDs) for the area in which the property that is the subject of the special use permit is located;

(vi) The commander or administrator of a military installation, as defined in Article 902, that is within three thousand (3,000) feet of the property that is the subject of the special use permit application;

(vii) The Administrator of the Division of Environmental Protection of the Nevada State Department of Conservation and Natural Resources;

(viii) The Nevada State Fire Marshal; and

(ix) The Administrator of the Division of Industrial Relations of the Nevada State Department of Business and Industry.

(2) Notice by Electronic Means. If requested by a party pursuant to subsection (a) of this section and if receipt can be verified, an electronic notice must be provided at least thirty (30) days before the meeting, setting forth the time, place, purpose of hearing, and map or physical description of the land involved.

(3) Number of Notices. If the number of notices sent pursuant to this section does not identify thirty (30) or more separate property owners, the County shall send out additional notices to achieve a total of at least thirty (30) separate property owners. These notices shall be sent to owners of real property that are closest to the property in question, not including those owners provided notice pursuant to subsection (a) of this section.

(4) Compliance with Noticing Requirements. Owners of all real property to be noticed pursuant to this section shall be those owners identified on the latest County Assessor's ownership maps and records. Such notice is complied with when notice is sent to the last known addresses of such real property owners as identified in the latest County Assessor's records. Any person who attends the public hearing shall be considered to be legally noticed unless those persons can provide evidence that they were not notified according to the provisions of this section.

(5) Notice in a Newspaper of General Circulation. A notice setting forth the time, place, purpose of hearing, map or physical description of the land involved, and description of all explosives to be located on the property shall be published at least thirty (30) days before the Planning Commission's scheduled public hearing on the special use permit in a newspaper of general circulation in which the property which is the subject of the special use permit is located.

(d) Findings. Prior to recommending approval of the special use permit application, the Planning Commission shall find that subsections (1) through (4) are true, and if a military installation is required to be noticed, finding (5).

(1) Consistency. The proposed use is consistent with the action programs, policies, standards and maps of the Master Plan and the applicable area plan;

(2) Improvements. Adequate utilities, roadway improvements, sanitation, water supply, drainage, and other necessary facilities have been

provided, the proposed improvements are properly related to existing and proposed roadways, and an adequate public facilities determination has been made in accordance with Division Seven.;

(3) Site Suitability. The site is physically suitable for the type of development and for the intensity of development; and

(4) Issuance Not Detrimental. Issuance of the permit will not be significantly detrimental to the public health, safety or welfare; injurious to the property or improvements of adjacent properties; or detrimental to the character of the surrounding area.

(5) Effect on a Military Installation. Issuance of the permit will not have a detrimental effect on the safety, security, location, purpose or mission of the military installation.

(e) Board of County Commissioners Review Procedures. The Board of County Commissioners shall review the Planning Commission's recommendation on the special use permit in accordance with the provisions of this section.

(1) Scheduling of Public Hearing. A public hearing on the recommendation of the Planning Commission on the special use permit shall be scheduled before the Board of County Commissioners no later than thirty (30) days of receipt by the Clerk of the Board of County Commissioners of the transmittal letter summarizing the recommendations of the Planning Commission.

(2) Notice. Notice of the Board of County Commissioners public hearing shall be in accordance with subsection (c) of this section.

(3) Effective Date of Action. The Board of County Commissioners shall grant or deny the special use permit no later than thirty (30) days after the date of the public hearing conducted by the Board of County Commissioners.

[Added by Ord. 1347, provisions eff. 11/2/07. Amended by Ord. 1447, provisions eff. 9/9/10.]

Section 110.810.50 Appeals. An action of the Planning Commission, Board of Adjustment or a hearing examiner made pursuant to this article may be appealed to the Board of County Commissioners in accordance with the provisions of Section 110.912.20 of the Development Code.

[Amended by Ord. 873, provisions eff. 6/7/93; Ord. 1156, provisions eff. 3/22/02; Ord. 1234, provisions eff. 5/21/04; Ord. 1346, provisions eff. 11/2/07, Ord. 1378, provisions eff. 8/1/08; Ord. 1555, provisions eff. 5/8/15.]

Section 110.810.55 One Year Wait on Denials. After the denial of a special use permit, no application for a special use permit for the same or similar use may be accepted for one (1) year immediately following the denial. This section shall not apply to applications denied without prejudice, which may be refiled within one (1) year.

[Amended by Ord. 873, provisions eff. 6/7/93.]

Section 110.810.60 Modification of a Special Use Permit. Proposed modifications of approved special use permits shall be subject to the requirements in this section.

(a) Required Conditions. The Director of Community Development may approve plans for an alteration of the approved use when the alteration complies with all of the following conditions:

(1) The building or use alteration is incidental to the existing use;

(2) The building or use alteration does not result in a change of use;

(3) The building alteration involves more than ten (10) percent increase in floor area covered by existing structures associated with the use;

(4) The use alteration involves more than ten (10) percent increase in the overall site area covered by the existing use;

(5) The building or use alteration, in the opinion of the Director of Community Development, would not have a substantial adverse effect on adjacent property; and

(6) The building or use alteration complies with existing requirements of agencies having jurisdiction and any other appropriate regulatory agency as determined by the Director of Community Development.

(b) Conditions Not Met. If a proposed alteration does not comply with the conditions in subsection (a) of this section, a new permit shall be required following the same procedure required for the initial application.

(c) New Permit Required. Modification of the terms of the approved special use permit itself or the waiver or alteration of conditions imposed incident to the granting of the permit shall require a new application following the same procedure required for the initial permit.

[Amended by Ord. 873, provisions eff. 6/7/93.]

Section 110.810.65 Expiration. A special use permit shall expire as provided in this section.

(a) Time Period. A special use permit shall expire and become null and void at the time specified in the permit, or if not specified, two (2) years from the final date of approval.

(b) Extension. The time period in subsection (a) of this section may be extended by the Planning Commission, Board of Adjustment, or a hearing examiner only for a special use permit originally acted upon by the Planning Commission, Board of Adjustment or a hearing examiner. Requests for time extensions shall be in writing and shall be submitted prior to the expiration date. The request shall state the reason for the extension.

(c) Discontinuance. A special use permit shall expire and become null and void twelve (12) months after the purpose for which it was granted has been discontinued or abandoned. During this twelve (12) month period, any operational conditions of approval shall remain in force and effect.

[Amended by Ord. 873, provisions eff. 6/7/93; Ord. 1234, provisions eff. 5/21/04.]

Section 110.810.70 Revocation. Revocation of a special use permit shall be subject to the requirements of this section.

(a) Initiation of Action. The Planning Commission or Board of County Commissioners may initiate an action to revoke a special use permit originally reviewed by the Planning Commission. The Board of Adjustment or Board of County Commissioners may initiate an action to revoke a special use permit originally reviewed by the Board of Adjustment. A hearing examiner or the Board of County Commissioners may initiate an action to revoke a special use permit originally reviewed by a hearing examiner.

(b) Grounds for Revocation. A special use permit may be revoked pursuant to the provisions of this section upon a finding of any one (1) or more of the following grounds:

(1) That the special use permit approval was obtained or extended by fraud;

(2) That one (1) or more of the conditions upon which such development approval was granted have been violated; or

(3) That the use or facility for which the development approval was granted is so conducted or maintained as to be detrimental to the public health or safety, or as to be a public nuisance.

(c) Public Hearing. The Planning Commission, Board of Adjustment or a hearing examiner shall hold a public hearing upon the revocation of the special use permit on which it had authority to review. The hearing shall be noticed in accordance with this article. The Planning Commission, Board of Adjustment or hearing examiner shall submit findings based on any one or more of the grounds listed in subsection (b) of this section and shall forward a recommendation on revocation to the Board of County Commissioners. The person or persons to whom the special use permit has been issued shall be notified of such recommendations not later than three (3) days after submission of the report to the Clerk of the Board of County Commissioners.

(d) Board of County Commissioners' Action. The Board of County Commissioners shall hold a public hearing upon the revocation of the special use permit. The hearing shall be noticed in accordance with this article. After the public hearing and consideration of the recommendation of the Planning Commission, Board of Adjustment or the hearing examiner, the Board of County Commissioners may take action to revoke the special use permit. The action of the Board of County Commissioners shall be by an affirmative vote of a majority of the entire membership of the Board. In the case of a tie vote due to the absence of a member, the appeal shall be continued to a future meeting unless requested otherwise by the appellant. Said future meeting may be beyond the sixty (60) days required for a final decision. The final decision of the Board of County Commissioners shall be final for the purposes of judicial review.

[Amended by Ord. 873, provisions eff. 6/7/93; Ord. 1156, provisions eff. 3/22/02; Ord. 1234, provisions eff. 5/21/04.]

[Section 110.810.50 entitled "Standard Conditions" repealed by Ord. 873, provisions eff. 6/7/93. Section 110.810.45 entitled "Conformance with Chapter" amended by Ord. 873, provisions eff. 6/7/93 and repealed by Ord. 1040, provisions eff. 11/1/98.]

Article 812
PROJECTS OF REGIONAL SIGNIFICANCE

[This Article amended in its entirety by Ord. 873, provisions eff. 6/7/93.]

Sections:

110.812.00	**Purpose**
110.812.05	**Projects Included**
110.812.10	**Exception**
110.812.15	**Determination**
110.812.20	**Special Use Permit Required**
110.812.25	**Special Use Permits and Tentative Maps**
110.812.30	**Amendments**
110.812.35	**Combined Applications**

Section 110.812.00 Purpose. The purpose of this article, Article 812, Projects of Regional Significance, is to prescribe the procedure that is required to review those projects defined by state statute as projects of regional significance.

Section 110.812.05 Projects Included. Projects of regional significance are those that require a change in the regulatory zone or other amendment to the Master Plan, special use permit, a tentative map, or other permit which, if approved, will have the effect of increasing:

(a) Employment by not fewer than 938 employees;

(b) Housing by not fewer than 625 units;

(c) Hotel accommodations by not fewer than 625 rooms;

(d) Sewage by not less than 187,500 gallons per day;

(e) Water usage by not less than 625 acre feet per year; or

(f) Traffic by not less than an average of 6,250 trips daily.

[Amended by Ord. 1447, provisions eff. 9/9/10.]

Section 110.812.10 Exception. Section 110.812.05 shall not apply to projects which, prior to June 17, 1989, have an approved tentative map, special use permit, or change in the adopted regulatory zone or other amendments to the Master Plan.

[Amended by Ord. 1447, provisions eff. 9/9/10.]

Section 110.812.15 Determination.

(a) Responsible Entity. The Director of Community Development shall make the determination of whether a project is of regional significance based upon the criteria in Section 110.812.05.

(b) Multi-Phased Projects. The determination for a project which is built in phases or built out over a number of years shall be based on the total size of the complete development and not on the size of individual phases or parts of the development.

Section 110.812.20 Special Use Permit Required. A special use permit shall be required for a project of regional significance, unless Sections 110.812.25 and 110.812.30 are applicable. A special use permit required by this section shall be processed according to the provisions of Article 810.

Section 110.812.25 Special Use Permits and Tentative Maps. In addition to the provisions of Articles 608 and 810, tentative maps and special use permits for projects of regional significance shall be processed pursuant to this section.

(a) Notice. The Director of Community Development shall provide notice to the Truckee Meadows Regional Planning Agency of any public meeting involving a project of regional significance.

(b) General Process. The application shall be processed according to the normal procedures as set forth in Article 608 or Article 810, up to the point of final Planning Commission action.

(c) Planning Commission Action. The Planning Commission has the option of not approving or provisionally approving the application, with or without conditions.

(d) Planning Commission Disapproval. If the Planning Commission does not provisionally approve the application, no further action is taken.

(e) Forwarding Application. If the Planning Commission provisionally approves the application, the Director of Community Development shall forward the application, together with all supporting materials and the findings of the Planning Commission, to the Truckee Meadows Regional Planning Commission. The application will be processed by the Truckee Meadows Regional Planning Commission in accordance with state statutes and the procedures of the Regional Planning Agency.

(f) Conformance. If the Truckee Meadows Regional Planning Commission finds the project to be in conformance with the Truckee Meadows Regional Plan or it fails to make any finding within sixty (60) days after the material in Subsection (e) of this section is sent by the County, the application shall be deemed approved.

(g) Nonconformance. If the Truckee Meadows Regional Planning Commission finds the project to be not in conformance with the Truckee Meadows Regional Plan, the County or the applicant can appeal that decision to the Governing Board of the Truckee Meadows Regional Planning Agency. If the decision is not appealed, the application is deemed disapproved.

(h) Appeals. Upon appeal, the Governing Board of the Truckee Meadows Regional Planning Agency may uphold the decision of the Regional Planning Commission, reverse the decision, or make recommendations to make the project consistent with the Regional Plan.

(1) If the decision is upheld, the project is deemed disapproved;

(2) If the decision is reversed, the project is deemed approved; or

(3) If the Governing Board makes recommendations to make the project consistent, the Washoe County Planning Commission shall consider such recommendations. It shall not approve the project until it directs changes or adds conditions to assure that the project is consistent with the Regional Plan, based on the recommendations of the Governing Board of the Truckee Meadows Regional Planning Agency.

Section 110.812.30 Amendments. Changes in the adopted regulatory zone or amendments to the Master Plan for projects of regional significance shall be processed pursuant to this section.

(a) Notice. The Director of Community Development shall provide notice to the Truckee Meadows Regional Planning Agency of any public meeting involving a project of regional significance.

(b) General Process. The application shall be processed according to the normal procedures as set forth in the respective Division Eight article up to the point of final Board of County Commissioners' action.

(c) Board of County Commissioners' Action. The Board of County Commissioners has the option of not approving or provisionally approving the application, with or without conditions.

(d) Board of County Commissioners' Disapproval. If the Board of County Commissioners does not provisionally approve the application, no further action is taken.

(e) Forwarding Application. If the Board of County Commissioners provisionally approves the application, the Director of Community Development shall forward the application, together with all supporting materials, recommendation of the Planning Commission, and the findings of the Board of County Commissioners, to the Truckee Meadows Regional Planning Commission. The application will be processed by the Truckee Meadows Regional Planning Commission in accordance with state statutes and the procedures of the Regional Planning Agency.

(f) Conformance. If the Truckee Meadows Regional Planning Commission finds the project to be consistent with the Truckee Meadows Regional Plan or it fails to make any finding within sixty (60) days after the material in Subsection (e) of this section is sent by the County, the application shall be deemed approved.

(g) Nonconformance. If the Truckee Meadows Regional Planning Commission finds the project to be not in conformance with the Truckee Meadows Regional Plan, the County or the applicant can appeal that decision to the Governing Board of the Truckee Meadows Regional Planning Agency. If the decision is not appealed, the application is deemed disapproved.

(h) Appeals. Upon appeal, the Governing Board of the Truckee Meadows Regional Planning Agency may uphold the decision of the Regional Planning Commission, reverse the decision, or make recommendations to make the project consistent with the Regional Plan.

(1) If the decision is upheld, the project is deemed disapproved;

(2) If the decision is reversed, the project is deemed approved; or

(3) If the Governing Board makes recommendations to make the project consistent, the Board of County Commissioners shall consider such recommendations. It shall not approve the project until it directs changes or adds conditions to assure that the project is consistent with the Regional Plan, based on the recommendations of the Governing Board of the Truckee Meadows Regional Planning Agency. The Board of County Commissioners shall be required to hold a public hearing and notice this hearing before final action may be taken.

[Amended by Ord. 1447, provisions eff. 9/9/10.]

Section 110.812.35 Combined Applications. If the projects involve more than one of the types of applications described in Section 110.812.05, the applications shall be combined throughout the approval process. If the combined applications include those requiring Planning Commission approval and Board of County Commissioners' approval, all the applications shall be processed pursuant to Section 110.812.30.

Article 814
DEVELOPMENT AGREEMENTS

Sections:

110.814.00	**Purpose**
110.814.05	**Applicability**
110.814.10	**Processing of Other Approvals**
110.814.15	**Application**
110.814.20	**Contents of Development Agreement**
110.814.25	**Notice**
110.814.30	**Action by Board**
110.814.35	**Periodic Review**
110.814.40	**Amendment or Cancellation of Development Agreement**
110.814.45	**Recordation**

Section 110.814.00 Purpose.

(a) The purpose of this article is to provide procedures and minimum requirements for the review and consideration of development agreements upon application by, or on behalf of, property owners or other persons having a legal or equitable interest in the property subject to the agreement. A development agreement may be appropriate in situations where the property owners are proposing a large and/or complex project with phased build-out.

(b) The intent of this article is to provide a mechanism, in return for specific public benefits, that gives assurance to a property owner who has obtained the necessary approvals for a project that he may proceed with and complete development as specified in and in accordance with the development agreement, under the land use laws, ordinances, codes, resolutions, rules, regulations, plans and conditions of approval adopted by the Board of County Commissioners and in effect at the time the project was originally approved.

(c) It is intended that the provisions of this article shall be fully consistent, and in full compliance, with the provisions of state law (NRS 278) and shall be so construed.

[Amended by Ord. 1155, provisions eff. 3/22/02.]

Section 110.814.05 Applicability. A development agreement may be approved for land which is to be developed as a single entity. The development agreement may be entered into only after the subject property has received approval for a special use permit, tentative map, specific plan or other discretionary permit.

(a) Laws in Effect. The allowed uses, densities and standards of the land subject to the development agreement shall be those in effect at the time the agreement is made, provided that all such uses, densities and standards are consistent with the Master Plan, including the area plans, and any specific plan, if applicable.

(b) Subsequent Actions. A development agreement shall not prevent the County, in subsequent actions applicable to the property, from adopting new ordinances, resolutions or regulations that conflict with those ordinances, resolutions and regulations in effect at the time the development agreement is made, except that any subsequent action by the County shall not prevent the development of the land as set forth in the development agreement.

(c) Emergency Situations. The County may suspend the issuance of building permits for the development project after a noticed public hearing if it finds in good faith that a clear and present emergency requires the suspension.

(d) State or Federal Restrictions. In the event that state or federal laws or regulations enacted after a development agreement has been entered into, prevent or preclude compliance with one (1) or more of the provisions of the development agreement, such provisions shall be modified or suspended as may be necessary to comply with the new state or federal laws or regulations. Any such action shall be taken by the Board of County Commissioners after a noticed public hearing.

[Amended by Ord. 1155, provisions eff. 3/22/02; Ord. 1447, provisions eff. 9/9/10.]

Section 110.814.10 Processing of Other Approvals. Applications for a development agreement may be processed concurrently with an application for a special use permit, tentative map, regulatory zone amendment or other discretionary permit.

[Amended by Ord. 1041, provisions eff. 12/-1/98; Ord. 1155, provisions eff. 3/22/02; Ord. 1447, provisions eff. 9/9/10.]

Section 110.814.15 Application.

(a) Initiated by Owner. Any owner of real property may request and apply through the Department of Community Development to enter into a development agreement provided the following:

(1) The status of the applicant as an owner of the property is established to the satisfaction of the Director of the Department of Community Development.

(2) The application is made on forms approved by and containing all information required by the Director of the Department of Community Development.

(3) The application is accompanied by all lawfully required documents, information and materials.

(b) Director's Review. The Director of the Department of Community Development or his/her designee is authorized to receive, review and process all applications for development agreements.

(c) Fees. Processing fees, as established by the County Commissioners, shall be collected for any application for a development agreement made in compliance with this article.

[Added by Ord. 1155, provisions eff. 3/22/02.]

Section 110.814.20 Contents of Development Agreement. The application shall contain the following:

(a) Mandatory Contents. A development agreement entered into in compliance with this article shall contain the following provisions:

(1) A legal description of the land subject to the development agreement;

(2) The proposed duration of the development agreement;

(3) The permitted uses of the land;

(4) The density and/or intensity of uses;

(5) The maximum height and size of the proposed buildings;

(6) Any provisions, if any, for the dedication or reservation of any portion of the land for public use; and

(7) Terms and conditions relating to construction and financing of necessary public improvements and facilities, including participation in special assessment district proceedings, if necessary.

(b) Permissive Contents. A development agreement entered into in compliance with this article may contain the following provisions:

(1) Provisions that require that construction shall commence within a specified time and that the project, or any individual phase, be completed within a specified time. If dates are specified, a process for extensions may be included.

(2) A negotiated level of protection from either a future growth control ordinance or a future increase in development fees, including impact fees.

(3) Any modifications to ordinances, codes and regulations that were previously approved through a discretionary permit shall be listed and explained. The explanation shall describe how the modifications are in the public interest.

(4) Restrictions on the assignability of the agreement by the applicant and, if assignable, provisions ensuring that the successor in interest assumes the obligations under the development agreement.

(5) Provisions for minor modifications of the development agreement.

(6) Any other terms, conditions and requirements the parties may deem necessary and proper, including requirements for ensuring, to the satisfaction of the County, performance of all provisions of the agreement in a timely manner by the applicant.

[Amended by Ord. 873, provisions eff. 6/7/93; Ord. 1155, provisions eff. 3/22/02.]

Section 110.814.25 Notice. Notice for all public hearings required by this article shall be given in accordance with the provisions of this section.

(a) Notice of Property Owners by Mail. A notice setting forth the time, place, purpose of hearing, and map or physical description of the land involved shall be sent by mail at least ten (10) days before the meeting to the following persons:

(1) All owners of real property that are the subject of the development agreement;

(2) Advisory boards created by the Board of County Commissioners for the area in which the property that is the subject of the development agreement is located;

(3) All owners of real property within three hundred (300) feet of the property which is the subject of the development agreement;

(4) All tenants of any mobile home park that is located within three hundred (300) feet of the property which is the subject of the development agreement; and

(5) All General Improvement Districts (GID) for the area in which the property that is the subject of the development agreement is located.

(b) Notice of Property Owners by Electronic Means. If requested by a party pursuant to subsection (a) of this section and if receipt can be verified, an electronic notice must be provided at least ten (10) days before the meeting, setting forth the time, place, purpose of hearing, and map or physical description of the land involved.

(c) Number of Notices. If the number of notices sent pursuant to this section does not total thirty (30) or more, the County shall send out additional notices to make the total number at least thirty (30). These notices shall be sent to owners of real property that are closest to the property in question, not including those owners provided notice pursuant to Subsection (a) of this section.

(d) Notice in the Newspaper. A notice setting forth the date, time and place of the public hearing shall be published in a newspaper of general circulation in Washoe County not less than ten (10) days prior to the public hearing date.

(e) Compliance with Noticing Requirements. Owners of all real property to be noticed pursuant to this section shall be those owners identified on the latest County Assessor's ownership maps and records. Such notice is complied with when notice is sent to the last known addresses of such real property owners as identified in the latest County Assessor's records. Any person who attends the public hearing shall be considered to be legally noticed unless those persons can provide evidence that they were not notified according to the provisions of this section.

[Amended by Ord. 873, provisions eff. 6/7/93; Ord. 1088, provisions eff. 1/28/00; Ord. 1155, provisions eff. 3/22/02.]

Section 110.814.30 Action by Board. The Board of County Commissioners shall review a development agreement in accordance with the provisions of this section.

(a) Time Period for Hearing. The Clerk of the Board of County Commissioners shall schedule a public hearing before the Board of County Commissioners within sixty (60) days from the date the Director finds the application for a development agreement complete.

(b) Notice of Hearing. The public hearing shall be noticed as required by this article.

(c) County Commission Action. Following the conclusion of the public hearing, the County Commission shall take one or more of the following actions:

(1) Approval of the development agreement;

(2) Approval subject to specified conditions not included in the agreement as submitted; or

(3) Deny approval of the development agreement.

(4) If approved, introduce an ordinance adopting the development agreement.

(d) Findings. The approval or denial of the development agreement shall be accompanied by the following findings:

(1) The reasons why the development agreement would or would not be in the best interests of the County.

(2) The reasons why the development agreement would or would not promote the public interest and welfare of the County.

(3) The reasons why departures from Development Code regulations are or are not deemed to be in the public interest.

(4) In the case of a development agreement which proposes development over a period of years, the sufficiency of the terms and conditions intended to protect the interests of the public, residents and owners of the land subject to the development agreement in the integrity of the plan.

[Amended by Ord. 873, provisions eff. 6/7/93; Ord. 1155, provisions eff. 3/22/02.]

Section 110.814.35 Periodic Review. The Director of Community Development shall cause the development agreement to be reviewed every twenty-four (24) months and shall send a notice to the Board of County Commissioners whether or not the terms or conditions of the agreement are being complied with.

(a) Good Faith Compliance. As part of the review, the applicant or successor in interest shall be required to demonstrate good faith compliance with the terms of the development agreement.

(b) Termination or Modification. If the County finds and determines, on the basis of substantial evidence, that the applicant or successor in interest has not complied in good faith with the terms and/or conditions of the development agreement, the County may take action to terminate or modify the development agreement.

(1) Action to terminate or modify a development agreement may be initiated only by the Planning Commission or Board of County Commissioners.

(2) No action to terminate or modify a development agreement shall be taken without a public hearing noticed pursuant to this article.

[Amended by Ord. 873, provisions eff. 6/7/93; Ord. 1155, provisions eff. 3/2/02.]

Section 110.814.40 Amendment or Cancellation of Development Agreement. A development agreement may be amended or canceled, in whole or in part, by mutual consent of the parties to the agreement or their successors in interest, as set forth in this section.

(a) Notice of Intention. Notice of intention to amend or cancel any portion of the development agreement must be published in a newspaper of general circulation in Washoe County.

(b) Approval of Amendment or Cancellation. The Board of County Commissioners may approve an amendment to the development agreement by ordinance if the amendment is consistent with the Master Plan, including the area plans. The Board of County Commissioners may approve a cancellation of a development agreement if it determines that to do so is in the best interests of the County.

[Amended by Ord. 1155, provisions eff. 3/2/02; Ord. 1447, provisions eff. 9/9/10.]

110.814.45 Recordation. The County Clerk shall have the following filed in the records of the Office of the County Recorder at the applicant's expense:

(a) The approved and executed development agreement;

(b) Any approved and executed amendments to a development agreement; or

(c) Notice of any action taken to cancel all or part of a development agreement.

[Added by Ord. 1155, provisions eff. 3/22/02.]

[The following sections were repealed by Ord. 1155, provisions eff. 3/22/02: Section 110.814.15 heading entitled "Allowed Uses, Densities and Standards", with subparagraphs (a) through (d) becoming part of Section 110.814.05; Section 110.814.40 entitled "Concept Plan"; Section 110.814.45 entitled "Site Plan"; and Section 110.814.85 entitled "Recordation of Approved Final Documents". The following sections previously amended by Ord. 873, provisions eff. 6/7/93 were repealed by Ord. 1155, provisions eff. 3/22/02: Section 110.814.10 entitled "Requirements for Application"; Section 110.814.20 entitled "Review and Approval Process"; Section 110.814.30 entitled "Professional Assistance"; Section 110.814.50 entitled Optional Contents"; Section 110.814.55 entitled "Planning Commission Review of Preliminary Development Agreement"; Section 110.814.65 entitled "Appeal of Denial"; Section 110.814.75 entitled "Contents of Final Development Agreement"; and Section 110.814.80 entitled "Approval Procedures for Final Development Agreement".]

Article 818
AMENDMENT OF DEVELOPMENT CODE

Sections:

110.818.00	**Purpose**
110.818.05	**Requirements for Application**
110.818.10	**Supplemental Guidelines, Standards and Criteria**
110.818.15	**Review Procedures**
110.818.20	**Notice**
110.818.25	**Appeal of Denial**
110.818.30	**Action by Board**
110.818.35	**Written Record**
110.818.40	**Effective Date**
110.818.45	**One Year Wait on Denials**
110.818.50	**Modification of a Development Code Amendment**
110.818.55	**Moratorium**
110.818.60	**Technical Revision of Development Code**

Section 110.818.00 Purpose. The purpose of this article, Article 818, Amendment of Development Code, is to provide for the method for amending the Development Code.

[Amended by Ord. 873, provisions eff. 6/7/93; Ord. 1447, provisions eff. 9/9/10.]

Section 110.818.05 Requirements for Application.

(a) Initiation of Amendment. Except as provided in Section 110.818.60, amendments shall be initiated as provided in this subsection. The Board of County Commissioners or the Planning Commission may initiate an amendment to the Development Code through resolution. An owner of real property or the property owner's authorized agent may initiate an amendment through an application to the Planning Commission. Citizen advisory boards established by the Board of County Commissioners may petition the Planning Commission to initiate an amendment to the Development Code.

(b) Completeness. No Development Code amendment shall be processed until the information necessary to review and decide upon the proposed Development Code amendment is deemed complete by the Director of Community Development.

[Amended by Ord. 873, provisions eff. 6/7/93; Ord. 1148, provisions eff. 2/26/02.]

Section 110.818.10 Supplemental Guidelines, Standards and Criteria. In addition to the standards and findings set forth in the Development Code, the Director of Community Development may prepare supplemental guidelines for the submission of applications and minimum standards and criteria for approval applications.

[Amended by Ord. 873, provisions eff. 6/7/93.]

Section 110.818.15 Review Procedures. Except as provided in Section 110.818.60, the Planning Commission shall review a Development Code amendment in conformance with this section.

(a) General Provisions. The Planning Commission shall conduct at least one (1) public hearing with notification for the purpose of receiving oral and written evidence relative to the application. The evidence shall be reviewed to determine if the Development Code amendment request is consistent with the Washoe County Master Plan. The Planning Commission shall recommend approval, conditional approval, or denial of the application based on the results of this review.

(b) Time Period for Hearing. Public hearings conducted by the Planning Commission shall be held within one-hundred and twenty-five (125) days from the date the resolution was adopted or the complete application was accepted.

(c) Time Period for Action. The Planning Commission may take action on the proposed Development Code amendment at the conclusion of the public hearing, but shall take action no later then one-hundred and eighty (180) days after the resolution was adopted or the complete application was accepted. An extension of time for Planning Commission action may be granted if mutually agreed upon between the applicant and the Director of Community Development.

(d) Action. The Planning Commission may take action to recommend approval or deny the Development Code amendment request. A recommendation of approval of a Development Code amendment request shall be by resolution based upon a simple majority vote of the quorum present. Failure of the Planning Commission to hold a public hearing or take action within the time frames provided in this article shall constitute a recommendation of approval of the Development Code amendment application.

(e) Findings. When making its recommendation to the Board of County Commissioners for approval, modification of an amendment, or denial, the Planning Commission shall, at a minimum, make at least one of the following findings of fact:

(1) Consistency with Master Plan.

(i) Approval: The proposed Development Code amendment is in substantial compliance with the policies and action programs of the Washoe County Master Plan.

(ii) Denial: The proposed Development Code amendment is not in substantial compliance with the policies and action programs of the Master Plan.

(2) Promotes the Purpose of the Development Code.

(i) Approval: The proposed Development Code amendment will not adversely impact the public health, safety or welfare, and will promote the original purposes for the Development Code as expressed in Article 918, Adoption of Development Code.

(ii) Denial: The proposed Development Code amendment would adversely impact the public health, safety or welfare, and will not promote the original purposes for the Development Code as expressed in Article 918, Adoption of Development Code.

(3) Response to Changed Conditions.

(i) Approval: The proposed Development Code amendment responds to changed conditions or further studies that have occurred since the Development Code was adopted by the Board of County Commissioners, and the requested amendment allow for a more desirable utilization of land within the regulatory zones.

(ii) Denial: The proposed Development Code amendment does not identify and respond to changed conditions or further studies that have occurred since the Development Code was adopted by the Board of County Commissioners, and the requested amendment does not create a more desirable utilization of land within the regulatory zones.

(4) No Adverse Affects.

(i) Approval: The proposed Development Code amendment will not adversely affect the implementation of the policies and action programs of the Conservation Element or the Population Element of the Washoe County Master Plan.

(ii) Denial: The proposed Development Code amendment will adversely affect the implementation of the policies and action programs of the Conservation Element or the Population Element of the Washoe County Master Plan.

(f) Effect of Planning Commission Denial. In the event the Planning Commission denies a Development Code amendment application, that action is final unless appealed to the Board of County Commissioners.

(g) Planning Commission Report. Within sixty (60) days of the action by the Planning Commission on the Development Code amendment, a report describing the amendment, discussion at the public hearing, and recommendation and vote of the Planning Commission shall be transmitted to the Board of County Commissioners. If the Planning Commission does not recommend approval, it shall state why it could not make the findings for approval in Subsection (f) of this section.

[Amended by Ord. 873, provisions eff. 6/7/93; Ord. 1148, provisions eff. 2/26/02; Ord. 1156, provisions eff. 3/22/02; Ord. 1447, provisions eff. 9/9/10.]

Section 110.818.20 Notice. Except as provided in Section 110.818.60, notice for all Development Code amendments shall be given in accordance with the provisions of this section.

(a) Notice in the Newspaper. A notice setting forth the date, time and place of the public hearing shall be published in a newspaper of general circulation in Washoe County not less than ten (10) days prior to the public hearing date. The notice

shall describe the proposed Development Code amendment request and other pertinent information in such a manner that the Development Code amendment request and its effect(s) can be clearly identified.

(b) Notice to Citizen Advisory Boards.

(1) Notice to Citizen Advisory Board Chairperson. A notice setting forth the date, time and place shall be sent either by mail or, if requested by the citizen advisory board chairperson, by electronic means if receipt of such an electronic notice can be verified, to every chairperson of a citizen advisory board created by the Board of County Commissioners not less than ten (10) days prior to the hearing date. The notice shall describe the proposed Development Code amendment request, include the specific amendment language, and other pertinent information in such a manner that the Development Code amendment request and its effect(s) can be clearly identified.

(2) Notice to Citizen Advisory Board Members. A notice setting forth the date, time and place shall be sent either by mail or, if requested by the citizen advisory board member, by electronic means if receipt of such electronic notice can be verified, to every member of a citizen advisory board created by the Board of County Commissioners not less than ten (10) days prior to the hearing date. The notice shall describe the proposed Development Code amendment request, and other pertinent information in such manner that the Development Code amendment request and its effect(s) can be clearly identified. Upon request, a complete copy of the specific amendment language will be forwarded to any citizen advisory board member. This request shall not be considered a violation of the time period enumerated in this subsection.

[Amended by Ord. 873, provisions eff. 6/7/93; Ord. 1088, provisions eff. 1/28/00; Ord. 1148, provisions eff. 2/26/02.]

Section 110.818.25 Appeal of Denial. A denial action of the Planning Commission made pursuant to this article may be appealed to the Board of County Commissioners in accordance with the provisions of Section 110.912.20 of the Development Code.

[Amended by Ord. 873, provisions eff. 6/7/93; Ord. 1555, provisions eff. 5/8/15.]

Section 110.818.30 Action by Board. Except as provided in Section 110.818.60, the Board of County Commissioners shall review proposed Development Code amendments in conformance with this section.

(a) Time Period for Hearing. The Clerk of the Board of County Commissioners shall schedule a public hearing before the Board of County Commissioners on the appeal of a denial or recommendation of approval of the Planning Commission within 60 days of the filing of the appeal or receipt of the Planning Commission's action.

(b) Notice of Hearing. The public hearing on the appeal shall be noticed as required by this article.

[Amended by Ord. 873, provisions eff. 6/7/93; Ord. 1148, provisions eff. 2/26/02; Ord. 1156, provisions eff. 3/22/02; Ord. 1555, provisions eff. 5/8/15.]

Section 110.818.35 Written Record. When taking final action on the Planning Commission's recommendation, or final action as permitted in Section 110.818.60, the Board of County Commissioners shall make part of the record their affirmation, modification or rejection of either the findings of fact provided in the Planning Commission's final recommendation, or findings of fact under Section 110.818.60, as applicable, as well as any other findings of fact that the Board of County Commissioners deems to be relevant.

[Amended by Ord. 1148, provisions eff. 2/26/02.]

Section 110.818.40 Effective Date. A Development Code amendment shall become effective in accordance with the provisions of this section.

(a) NRS Requirements. Pursuant to NRS 244, an amendment to the Development Code shall only become effective after at least twenty five (25) copies of the amended Development Code have been reproduced; at least three (3) copies of the amended Development Code have been filed with the County Clerk; and, the ordinance adopting the amendment is published by title only once a week for a period of two (2) weeks in a newspaper of general circulation in the County, and the publications state the code may be examined by the general public at the Office of the County Clerk.

[Amended by Ord. 873, provisions eff. 6/7/93; Ord. 1148, provisions eff. 2/26/02.]

Section 110.818.45 One Year Wait on Denials. After the denial of a Development Code amendment, no application for a Development Code amendment for the same or similar amendment may be accepted for one (1) year immediately following the denial. This section shall not apply to applications denied without prejudice, which may be refiled within one (1) year.

[Amended by Ord. 873, provisions eff. 6/7/93.]

Section 110.818.50 Modification of a Development Code Amendment. Proposed modifications of approved Development Code amendments shall required a new application following the same procedure required for the initial application, except that if a modification of a technical revision does not meet the requirements of Section 110.818.60, the modification must follow the procedures enumerated in Sections 110.818.05 through Sections 110.818.45.

[Amended by Ord. 873, provisions eff. 6/7/93; Ord. 1148, provisions eff. 2/26/02.]

Section 110.818.55 Moratorium. The Board of County Commissioners may declare a moratorium on the acceptance and processing of planning applications and/or issuance of building permits for a specific geographical area and for a specified length of time for the purposes of preparing an amendment to the Development Code.

(a) Initiation. Only the Board of County Commissioners or the Planning Commission through resolution may initiate the process for declaring a moratorium for this purpose. If the Board of County Commissioners initiates the process to declare a moratorium, it shall refer the matter to the Planning Commission for a recommendation. A moratorium of no more than ninety (90) days shall exist from the date of approval of a resolution.

(b) Planning Commission Hearing. The Planning Commission shall conduct a public hearing within sixty (60) days after it has resolved to declare a moratorium or within sixty (60) days from the date of referral by the Board of County Commissioners.

(c) Notice of Planning Commission Hearing. Notice of the date, time and place of the public hearing shall be published in a newspaper of general circulation in Washoe County not less than ten (10) days prior to the date of the public hearing to be conducted by the Planning Commission. Such notice shall describe why the moratorium is being proposed, what the proposed moratorium shall affect, the area that is affected by the moratorium, the anticipated length of time of the moratorium, and other pertinent information in such a manner that the moratorium and its effects can be clearly identified.

(d) Planning Commission Recommendation. After completion of the public hearing by the Planning Commission, it may recommend to the Board of County Commissioners approval of a moratorium, modify the extent and area of the moratorium, or recommend that the moratorium not be imposed. A recommendation to declare a moratorium shall require a simple majority vote of the entire membership of the Planning Commission.

(e) Findings. When making its recommendation for approval or modification, the Planning Commission shall, at a minimum, make the following findings of fact:

(1) The moratorium is necessary to promote the health, safety and welfare of the area described in the moratorium declaration;

(2) The moratorium is necessary to permit the staff, Planning Commission, Board of County Commissioners and public to focus on the efficient and effective preparation of an amendment to the Development Code; and

(3) The moratorium is necessary because continued development during the proposed moratorium period possibly would result in development that may conflict with the code amendment.

(f) Planning Commission Report. Within sixty (60) days of the action by the Planning Commission, a report describing the proposed moratorium, discussion at the public hearing, and the action and vote by the Planning Commission shall be transmitted to the Board of County Commissioners. Failure to report within the time limit provided in this subsection or failure to schedule a hearing within sixty (60) days of the date of referral of the matter by the Board of County Commissioners to the Planning Commission shall constitute a recommendation not to declare a moratorium.

(g) Board Hearing. The Clerk of the Board of County Commissioners shall schedule a public hearing before the Board of County Commissioners within thirty (30) days of receipt of the report describing the Planning Commission's action.

(h) Notice of Board Hearing. Notice of the date, time and place of the public hearing shall be published in a newspaper of general circulation in Washoe County not less than ten (10) days prior to the public hearing date. Such notice shall describe why the moratorium is being proposed, what the proposed moratorium shall affect, the area that is affected by the moratorium, the anticipated length of time of the moratorium, and other pertinent information in such a manner that the moratorium and its effects can be clearly identified.

(i) Required Vote. After completion of the public hearing by the Board of County Commissioners, it may declare a moratorium by a simple majority vote of its

entire membership. The final action of the Board of County Commissioners shall be final for purposes of judicial review.

(j) Affirmation of Findings. In declaring a moratorium, the Board of County Commissioners shall, at a minimum, affirm the findings of fact contained in the Planning Commission's recommendation or, if the Planning Commission did not make these findings, shall, at a minimum, make the findings of fact in Subsection (e) of this section.

(k) Period in Effect. A moratorium declared by the Board of County Commissioners shall be in effect for a period of no less than ninety (90) days and no more than one hundred and eighty (180) days from the date that the Board of County Commissioners takes action on the recommendation of the Planning Commission. The Board of County Commissioners may extend the moratorium, upon an affirmation of findings as required in (j) hereinabove, for two (2) additional consecutive periods before holding another public hearing pursuant to the provisions of this section.

[Amended by Ord. 873, provisions eff. 6/7/93; Ord. 1156, provisions eff. 3/22/02.]

Section 110.818.60 Technical Revision to Development Code.

(a) Purpose of Technical Revision. The purpose of the technical revision section is to provide a streamlined process for adopting changes that have no independent substantive effect on the Development Code.

(b) Requirements for Inclusion. To qualify as a technical revision under this section, the change must be:

(1) Mandated by state law, whether by statute or court decision, and when no significant discretion can be exercised by the County;

(2) Mandated by federal law, whether by statute or court decision, and when no significant discretion can be exercised by the County;

(3) Required to avoid a sanction under federal law, and when no significant discretion can be exercised by the County;

(4) Required to avoid disqualification from a federal program, and when no significant discretion can be exercised by the County;

(5) To obtain a benefit under federal law, and when no significant discretion can be exercised by the County;

(6) Needed to conform to an action taken by another County agency even if that action does not result in a change in the Washoe County Code;

(7) Needed to conform to a name change or other change made in the Washoe County Code; or

(8) Needed to improve or clarify the Development Code when there is not substantive effect on the Development Code.

(c) Administrative Process.

(1) Initiating the Process. The Director of Community Development shall have the sole authority to initiate a technical revision to the Development Code.

(2) Transmittal to Board of County Commissioners. Upon making the findings required under subsection (d) of this section, the Director of Community Development shall forward the technical revision to the Board of County Commissioners.

(d) Findings.

(1) The Director of Community Development must find that the proposed technical revision meets one of the conditions enumerated under this section. If the enumerated condition is one of those set forth in Section 110.818.60 (b), subsection (1) through (5), the Director of Community Development must specifically identify the independent source of the substantive change the technical revision will have on the Development Code.

(2) The Director of Community Development must also find that the proposed technical revision is consistent with all of the following:

(i) Nevada Revised Statutes;

(ii) The Truckee Meadows Regional Plan;

(iii) The Washoe County Master Plan; and

(iv) The purposes of the Development Code.

(3) If an independent legal authority mandates a change that is inconsistent with Nevada Revised Statutes, the Truckee Meadows Regional Plan, the Washoe County Master Plan, or the purposes of the Development Code; the Director of Community Development shall specifically identify that independent legal authority and the provision with which the technical revision will be inconsistent.

(e) Action by Board of County Commissioners. The Board of County Commissioners shall review proposed technical revisions to the Development Code in conformance with this section.

(1) Time Period for Hearing. The Clerk of the Board of County Commissioners shall schedule a public hearing before the Board of County Commissioners on the recommendation of approval by the Director of Community Development of a technical revision to the Development Code within thirty (30) days of the filing of the recommended technical revision with the Clerk of the Board of County Commissioners.

(2) Notice of Introduction of Ordinance and Public Hearing. The introduction of the ordinance and public hearing on the ordinance shall be noticed as follows:

(i) Notice to Planning Commission. A notice setting forth the date, time and place of the introduction of the ordinance concerning the technical revision to the Development Code shall be sent either by mail, or if requested by a Washoe County Planning Commission member, by electronic means if receipt of such an electronic notice can be verified, to every member of the Washoe County Planning Commission not less than ten (10) days prior to the scheduled introduction of the ordinance. The notice shall describe the proposed technical revision to the Development Code, including the specific language and other pertinent information, in such a manner that the proposed technical revision to the Development Code and its effect(s) can be clearly identified. Any objections or comments from members of the Planning Commission must be provided to the Director of Community Development or the Board of County Commissioners no later than at the introduction of the ordinance.

(ii) Notice to Citizen Advisory Boards. A notice setting forth the date, time and place of the introduction of the ordinance concerning the technical revision to the Development Code shall be sent either by mail, or if requested by a citizen advisory board member, by electronic means if receipt of such an electronic notice can be verified, to every chairperson and member of a citizen advisory board created by the Board of County Commissioners not less than ten (10) days prior to the scheduled introduction of the ordinance. The notice to the chairperson shall describe the proposed technical revision to the Development Code, including the specific language and other pertinent information, in such a manner that the proposed technical revision to the Development Code and its effect(s) can be clearly identified. The notice to a citizen advisory board member, other than the chairperson, shall describe the proposed technical revision to the Development Code in such a manner that the proposed technical revision to the Development Code and its effect(s) can be clearly identified. Any objections or comments from members of a citizen advisory board must be provided to the Director of Community Development or the Board of County Commissioners no later than at the introduction of the ordinance.

(iii) Notice in Newspaper. A notice setting forth the date, time and place of the public hearing shall be published in a newspaper of general circulation in Washoe County not less than ten (10) days prior to the public hearing date. The notice shall describe the proposed technical revision to the Development Code and other pertinent information in such a manner that the Development Code amendment request and its effect(s) can be clearly identified.

(3) Board of County Commissioners' Action. The Board of County Commissioners may take final action to adopt or deny the technical revision to the Development Code. Final action to approve the technical revision shall require a simple majority vote of the total membership of the Board.

[Added by Ord. 1148, provisions eff. 2/26/02. Amended by Ord. 1447, provisions eff. 9/9/10]

[Section 110.818.40 entitled "Projects of Regional Significance" repealed by Ord. 873, provisions eff. 6/7/93.]

Article 820
AMENDMENT OF MASTER PLAN

Sections:

110.820.00	**Purpose**
110.820.02	**Definitions**
110.820.05	**Requirements for Application**
110.820.10	**Supplemental Guidelines, Standards and Criteria**
110.820.15	**Review Procedures**
110.820.20	**Notice of Neighborhood Meeting**
110.820.23	**Notice**
110.820.25	**Appeal**
110.820.30	**Adoption of Master Plan Amendments by the Board of County Commissioners**
110.820.35	**Report by the Planning Commission**
110.820.40	**Referral for Conformance Review**
110.820.45	**Effective Date**
110.820.50	**One Year Wait on Denials**
110.820.55	**Modifications**
110.820.60	**Moratorium by the Board of County Commissioners**
110.820.65	**Certification by Electronic Means**
110.820.70	**Minor Amendment of Master Plan**

Section 110.820.00 Purpose. The purpose of this article, Article 820, Amendment of Master Plan, is to provide for the method for amending the Master Plan, including requests to change a master plan designation affecting a parcel of land, or a portion of a parcel.

[Amended by Ord. 873, provisions eff. 6/7/93; Ord. 1447, provisions eff. 9/9/10; Ordinance 1553, provisions eff. 4/24/15.]

Section 110.820.02 Definitions.

(a) "Board" means the Board of County Commissioners.

(b) "Commission" means the Planning Commission.

(c) "Director" means the Director of the Division or the person or persons designated by the Director to do the action.

(d) "Division" means the Planning and Development Division of the Department of Community Services for Washoe County.

(e) "Secretary" means the Secretary to the Planning Commission.

[Amended by Ord. 1553, provisions eff. 4/24/15.]

Section 110.820.05 Requirements for Application.

(a) Timing of Amendments. Each element and each area plan of the Master Plan may be amended by the Board of County Commissioners no more than four times per calendar year. Applications for Master Plan amendments shall only be accepted in January, May and September of each calendar year. Specific dates within these months shall be determined by the Director. For the purposes of this article, the restriction on the number of times that the Master Plan may be amended does not restrict the number of applications that may be submitted, but only refers to the number of times each component of the Master Plan may be modified by the Board of County Commissioners. The restriction on the number of times the Master Plan may be amended does not apply to minor amendments to the Master Plan as defined in Section 110.820.70.

(b) Initiation of Amendments. A Master Plan amendment may be initiated by the Board of County Commissioners or the Planning Commission through resolution. An owner of real property or the property owner's authorized agent may initiate an amendment through an application filed with Division. Citizen advisory boards established by the Board may petition the Commission to initiate an amendment. The Director may initiate a minor amendment as defined in NRS 278.225 and Section 110.820.70.

(c) Frequency of Amendment. Only the Board of County Commissioners or Planning Commission may initiate an amendment of the Master Plan for a parcel within 12 months after an amendment on that parcel has been approved or denied.

(d) Completeness. No Master Plan amendment shall be processed until the information necessary to review and decide upon the proposed Master Plan amendment is deemed complete by the Director. The Director shall make this determination within three working days of receipt of an application.

(e) Neighborhood Meeting. Before the application is submitted to the Planning Commission for a public hearing, the applicant must conduct a neighborhood meeting as required in Section 110.820.20, and the materials submitted to the Commission must include a report of the noticing for the meeting and comments received during the meeting.

(f) Referral to Planning Commission. Following the neighborhood meeting, the Director shall prepare a report and recommendations and submit the application to the Commission.

[Amended by Ord. 873, provisions eff. 6/7/93; Ord. 1156, provisions eff. 3/22/02; Ord. 1288, provisions eff. 3/24/06; Ord. 1447, provisions eff. 9/9/10.; Ord. 1553, provisions eff. 4/24/15.]

Section 110.820.10 Supplemental Guidelines, Standards and Criteria. In addition to the standards and findings set forth in the Development Code, the Director may prepare supplemental guidelines for the submission of applications and minimum standards and criteria for approval applications.

[Amended by Ord. 873, provisions eff. 6/7/93; Ord. 1553, provisions eff. 4/24/15.]

Section 110.820.15 Review Procedures. The Planning Commission shall review a Master Plan amendment in conformance with this section.

(a) Notice and Hearing; Comments by Planning Commissioners. The Commission shall hold at least one public hearing on a Master Plan amendment and may hold more in its discretion, especially if modifications are proposed at a public hearing and an amended application is required. Notice for each public hearing shall be given in accordance with Section 110.820.23. Following the public hearing, at least one Commissioner shall state for the record his/her comments on the proposed amendment and which findings under Section 110.820.15(d) that he/she can or cannot make.

(b) Concurrent Processing of Applications. If a proposed project requires more than one application under the provisions of the Development Code, the applications may be filed at the same time and processed concurrently. If more than one review authority is involved, the Director shall determine the sequence for action by the review authorities.

(c) Action. The Planning Commission may do any of the following:

(1) Adopt the Amendment. The amendment may be adopted by resolution which must be approved by an affirmative vote of at least 2/3 of the Commission's total membership. The resolution shall refer expressly to the maps, descriptive matter or other matter intended by the Commission to constitute the amendment, must include all the required findings, and shall be conditioned on:

(i) Adoption of the amendment by the Board, and

(ii) A determination by the Truckee Meadows Regional Planning Commission or, if required, the Tahoe Regional Planning Agency, as the case may be, that the amendment conforms to the applicable regional plan.

The action taken must be recorded on the map, plan, and descriptive matter with the signatures of the Chairman and Secretary to the Commission. A copy of the resolution shall be certified and sent to the Board, a copy shall be sent to the applicant and any other person who requests a copy, and a copy shall be date stamped and filed with the Secretary to the Commission. Adoption of a Master Plan amendment by the Commission is a final action subject to appeal to the Board, but failure to appeal does not preclude an aggrieved person from appearing before the Board when it considers the Master Plan amendment.

(2) Deny the Amendment. A denial is deemed to occur when any of the following occurs. Each such denial is appealable to the Board but is not a final action subject to judicial review:

(i) A motion to adopt the amendment fails to receive the required votes for adoption. In this case, each member of the Commission should comment for the record the reason behind his/her vote and which findings could or could not be made. The statements will be included in the record if appealed to the Board.

(ii) A motion to deny the amendment is approved by a majority of the members of the Commission present at the meeting. The motion must state the reason for the denial and which findings cannot be made. If there is a disagreement on the reason for denial or which findings cannot be made, each Commissioner should comment on the reason and state which finding he/she cannot

make, and the motion may state that it is based on the individual comments.

(iii) A motion to adopt or deny the amendment results in a tie vote and the applicant elects not to continue the matter under Planning Commission Rules. In this case, each member of the Commission should comment for the record the reason behind his/her vote and which findings could or could not be made. The statements will be included in the record if appealed to the Board.

(iv) No motion is made and seconded. In this case, since no action has been taken by the Commission, if it is appealed to the Board, it will be heard de novo by the Board. Individual Planning Commissioners may comment on the application for the record, but it is not required.

(3) Written notice of any denial shall be sent to the applicant by regular mail or electronic communication if authorized by the applicant, and a copy shall be date stamped and filed with the Secretary to the Commission. The denial may be appealed to the Board.

(d) Findings. When adopting an amendment, the Commission shall make all required findings contained in the area plan for the planning area in which the property that is the subject of the Master Plan amendment is located and, at a minimum, make at least three of the following findings of fact unless a military installation is required to be noticed, then in addition to the above, a finding of fact pursuant to subsection (6) shall also be made:

(1) Consistency with Master Plan. The proposed amendment is in substantial compliance with the policies and action programs of the Master Plan.

(2) Compatible Land Uses. The proposed amendment will provide for land uses compatible with (existing or planned) adjacent land uses, and will not adversely impact the public health, safety or welfare.

(3) Response to Change Conditions. The proposed amendment responds to changed conditions or further studies that have occurred since the plan was adopted by the Board of County Commissioners, and the requested amendment represents a more desirable utilization of land.

(4) Availability of Facilities. There are or are planned to be adequate transportation, recreation, utility, and other facilities to accommodate the uses and densities permitted by the proposed Master Plan designation.

(5) Desired Pattern of Growth. The proposed amendment will promote the desired pattern for the orderly physical growth of the County and guides development of the County based on the projected population growth with the least amount of natural resource impairment and the efficient expenditure of funds for public services.

(6) Effect on a Military Installation. The proposed amendment will not affect the location, purpose and mission of the military installation.

[Amended by Ord. 873, provisions eff. 6/7/93; Ord. 1347, provisions eff. 11/2/07; Ord. 1447, provisions eff. 9/9/10; Ord. 1553, provisions eff. 4/24/15.]

Section 110.820.20 Notice of Neighborhood Meeting. If the proposed amendment applies to a particular area of land, a neighborhood meeting shall be noticed and conducted in accordance with this section.

(a) Notice and Meeting. The County shall provide notice (at applicant's expense) and the applicant shall conduct a neighborhood meeting in accordance with NRS 278.210(2) as amended. The purpose of the neighborhood meeting is for the person who requested the proposed amendment to provide an explanation of the proposed amendment. A report on the neighborhood meeting shall be given to the Commission in the staff report for the public hearing on the proposed amendment.

(b) Compliance with Noticing Requirements. Owners of all real property to be noticed pursuant to this section shall be those owners identified on the latest County Assessor's ownership maps and records. Such notice is complied with when notice is sent to the last known addresses of such real property owners as identified in the latest County Assessor's records. Any person who attends the public hearing shall be considered to be legally noticed unless those persons can provide evidence that they were not notified according to the provisions of this section.

[Added by Ord. 1288, provisions eff. 3/24/06. Amended by Ord. 1447, provisions eff. 9/9/10; Ord. 1553, provisions eff. 4/24/15.]

Section 110.820.23 Notice. Public notice for a Master Plan amendment shall be given by the Commission in accordance with the provisions of Nevada Revised Statutes (NRS) 278.210(1) and by the Board in accordance with NRS 278.220(3). The published notice shall give the date, time and place of the hearing, which provisions in the Master Plan are being considered for amendment, the areas that will be affected by the amendment(s), a brief description of the proposed amendment, and a statement that the Commission/Board may adopt the proposed amendment, may significantly modify the proposed amendment and adopt it as modified, or may deny the proposed amendment after the public hearing without further notice.

[Amended by Ord, 873, provisions eff. 6/7/93; Ord. 1088, provisions eff. 1/28/00; Ord. 1156, provisions eff. 3/22/02; Ord. 1288, provisions eff. 3/24/06; Ord. 1347, provisions eff. 11/2/07; Ord. 1447, provisions eff. 9/9/10; Ord. 1553, provisions eff. 4/24/15.]

Section 110.820.25 Appeal. A person who is aggrieved by a decision of the Commission on a Master Plan amendment may appeal to the Board in accordance with the provisions of this section.

(a) Appeal Period. An appeal must be filed with the Division not later than close of business of the tenth calendar day after the Resolution or written notice is filed with the Secretary to the Commission. If the end of the appeal period falls on a non-business day, the appeal period shall be extended to include the next business day.

(b) Who Can Appeal. Appeals may be filed by any aggrieved person as defined in Section 110.910.02, unless otherwise defined by a Nevada Court in applying NRS 278.3195.

(c) Appeal Filing. An appeal shall be filed with the Director, accompanied by a filing fee. The appeal shall be in writing and state the reasons why the appellant believes that the Commission erred and should be overturned. The Director shall review the appeal within three working days and if the Director determines that

the information in the appeal is incomplete, the Director shall notify the appellant and the appellant shall have 10 days to resubmit the appeal.

(d) Scheduling of Hearing Before Board. When an appeal is deemed complete by the Director, a copy of the appeal shall be immediately delivered to the County Clerk who shall schedule a public hearing on the appeal at the next available regular meeting of the Board consistent with scheduling policies and practices, but not later than 60 days from the date that the appeal is received by the County Clerk. The public hearing may be delayed by agreement with the appellant, and the appeal may be withdrawn by the appellant at any time. The Director shall prepare a staff report including a copy of all material submitted to the Commission, a report on the hearing and proceedings from the recording, a copy of the appeal material, and a discussion of the appeal process including possible motions. The Director's report may include recommendations. A copy shall be given to the appellant as soon as it is prepared.

(e) Action Deadline. As required by NRS 2678.3195(2), the Board must take final action on the appeal within 60 days from the filing of the appeal with the County Clerk.

(f) Hearing Procedures. During the hearing:

(1) The appellant may be represented by counsel.

(2) The Chair may decide evidence issues before or at the hearing, and may administer oaths. Any one or combination of the Nevada Rules of Evidence may be used as a guideline at the discretion of the Chair.

(3) The Director shall first explain the nature of the appeal, and what happened at the Commission hearing, the findings of the Commission, and the evidence supporting those findings. The Appellant shall be given an opportunity to respond and present his/her viewpoints.

(4) Each party shall be afforded an opportunity to comment and rebut the evidence. Questions of witnesses shall be conducted through the Chair.

(5) Public Comment will be heard before the Board moves into deliberation on the appeal.

(g) Decision by the Board. The Board shall consider the appeal based on the record submitted and testimony and materials submitted at the public hearing. As required by NRS 278.3195(2)(f), the Board shall be guided by the statement of purpose underlying the regulation of improvement of land expressed in NRS 278.020 and other applicable provisions in NRS Chapter 278.

(1) The Board may affirm, modify or reverse the decision of the Commission, as explained in the subsections (h) and (i) below and may make its decisions based on its own interpretations of the findings, evidence and law.

(2) Decisions of the Board shall be by motion which must be approved by a simple majority of the total membership of the Board. The motion shall state the reasons for the motion. For the record, Board members should discuss their individual thoughts, conclusions and reasons.

(3) Decisions on appeals under this Section 110.820.25 are separate and independent from actions to adopt an amendment under Section 110.820.30. When the Board takes final action on an appeal, the Director shall prepare written notice thereof and shall file the notice with the County Clerk and mail a copy to the applicant. The filing with the

County Clerk starts the time period for filing for a judicial review of the Board's action.

(4) As provided below, after taking final action on the appeal, the Board may then commence to consider adopting the proposed amendment under Section 110.820.30. If a judicial review is sought on the Board's decision on an appeal, then proceedings are suspended until the judicial review is completed.

(h) Appeals of the Planning Commission's *Denial* of a Proposed Amendment. When considering an appeal of the Commission's denial of a proposed amendment, the Board may:

(1) Affirm the Commission's denial. This would be a final decision subject to judicial review.

(2) Reverse the Commission's denial. This would be a final decision subject to judicial review. The Board may schedule a hearing to consider adopting the amendment under Section 110.820.30, but since a certified resolution has not been submitted by the Commission under NRS 278.210(6) and NRS 278.220(1), the Board must first send the proposed amendment (with any modifications desired by the Board) to the Commission for a report as required by NRS 278.220(4) and Section 110.820.35.

(i) Appeals of the Planning Commission's *Adoption* of a Proposed Amendment. When considering an appeal of the Commission's adoption of a proposed amendment, the Board may:

(1) Affirm the Commission's Adoption. This would be a final decision subject to judicial review. The Board may directly proceed to consider adoption of the amendment in accordance with NRS 278.220 and Section 110.820.30. If proper notice has been given, as provided in Section 110.820.23 by the Board, the adoption of the amendment may be considered at the same meeting when the appeal is heard.

(2) Modify the Commission's Adoption. The Board may consider modifying and approving the amendment adopted by the Commission, but must first send the proposed modification to the Commission for a report as required by NRS 278.220(4) and Section 110.820.35, and conduct a public hearing as required by NRS 278.220(3). The subsequent adoption/denial of the modified amendment is a final action subject to judicial review.

(3) Reverse the Commission's Adoption. This would be a final action subject to judicial review, and no further action can be taken on the proposed amendment by the Board unless the Board desires to modify the proposed amendment as provided next above.

[Amended by Ord. 873, provisions eff. 6/7/93; Ord. 1447, provisions eff. 9/9/10; Ord. 1553, provisions eff. 4/24/15.]

Section 110.820.30 Adoption of Master Plan Amendments by the Board of County Commissioners. After the Planning Commission has adopted a proposed Master Plan amendment under Section 110.820.15 or filed a report as required by Section 110.820.25, the Board of County Commissioners shall review a Master Plan amendment for possible adoption in accordance with the provisions of this section.

(a) Public Hearing. The County Clerk shall schedule a public hearing before the Board.

(b) Notice of Hearing. The public hearing shall be noticed as required by Section 110.820.23.

(c) Action. The Board shall consider the recommendations, findings and reports of the Commission, and as authorized under NRS 278.220(1) may adopt any Master Plan amendment that the Board determines can practicably be applied to the development of the County within a reasonable period of time. Upon a motion to adopt or deny an approving resolution, members of the Board should individually discuss the reasons for their vote and which findings by the Commission can be affirmed, modified, or rejected by the Board.

(d) Adoption by the Board. The Board may adopt the Master Plan amendment by resolution approved by a majority of the total membership of the Board. The resolution shall refer expressly to the maps, descriptive matter or other matter intended by the Board to constitute the amendment. The resolution shall be referred for conformance review in accordance with Section 110.820.40. The resolution is not considered as a final action until a favorable conformance review is received, the resolution is executed by the Chair and the County Clerk, and a copy is date stamped and filed with the County Clerk.

(e) Modification/adoption. If the Board desires to modify a Master Plan amendment from what was adopted by the Commission, it must first send the modified amendment to the Commission for a report as required by NRS 278.220(4) and Section 110.820.35. If the Board desires to adopt the Master Plan amendment as modified, it shall do so by resolution approved by a majority of the total membership of the Board. The resolution shall be referred for conformance review as provided in Section 110.820.40 and is not considered as a final action until a favorable conformance review is received, the resolution is executed by the Chair and County Clerk, and a copy is date stamped and filed with the County Clerk.

(f) Deny the amendment. A denial is deemed to occur when any of the following events occurs. Each such denial is a final action subject to judicial review:

(1) A motion to adopt the amendment fails to receive the required votes for adoption. In this case, each member of the Board should comment for the record the reason behind his/her vote and which findings could or could not be made. The statements will be included in the record on appeal if judicial review is sought.

(2) A motion to deny the amendment is approved by a majority of the Board. The motion must state the reason for the denial and which findings cannot be made. If there is a disagreement on the reason for denial or which findings cannot be made, each Board member should comment on the reason and state which finding he/she cannot make, and the motion may state that it is based on the individual comments.

(3) A motion to adopt or deny the amendment results in a tie vote. In this case, the applicant may ask to have the application reheard at the next regular meeting of the Board where an odd numbered of commissioners may be present. If the applicant does not request a rehearing, each member of the Board should comment for the record the reason behind his/her vote and which findings could or could not be made.

(4) No motion is made, seconded or voted upon. If the matter is not tabled or continued to another date, this would be a final action subject to judicial review or other judicial proceeding.

(g) Written notice of any denial shall be sent to the applicant by regular mail or electronic communication if authorized by the applicant, and a copy shall be date stamped and filed with the County Clerk. The time period for commencing an action for judicial review starts when the resolution or notice is filed with the County Clerk.

[Amended by Ord. 873, provisions eff. 6/7/93; Ord. 1156, provisions eff. 3/22/02; Ord. 1447, provisions eff. 9/9/10; Ord. 1553, provisions eff. 4/24/15.]

Section 110.820.35 Report by the Planning Commission. If a modification to a proposed Master Plan amendment is referred to the Commission for a report under NRS 278.220(4), the Commission is not required to hold a public hearing on the modification and shall submit a report within 90 days from the date of referral. Failure by the Commission to submit a report within 90 days shall be deemed as a recommendation of approval.

[Amended by Ord. 1447, provisions eff. 9/9/10; Amended by Ord. 1553, *provisions eff. 4/24/15.]*

Section 110.820.40 Referral for Conformance Review. As required by applicable law, a resolution adopting a Master Plan amendment shall be submitted to the Truckee Meadows Regional Planning Commission or the Tahoe Regional Planning Agency, as applicable, for appropriate conformance review.

(a) If the reviewing agency determines that the proposed amendment conforms to the comprehensive regional plan, the adopting resolution shall be executed by the Chair and filed with the County Clerk which constitutes final action on the amendment.

(b) If the reviewing agency determines that the proposed amendment does not conform to the comprehensive plan, the matter shall be immediately referred to the Board to ask for reconsideration or appeal. If the non-conformance determination by the reviewing agency becomes a final determination, the non-conforming amendment is deemed denied by the Board without prejudice. The Board may initiate a new amendment under Section 110.820.05(c) and direct the Division to receive a new application.

[Amended by Ord. 1447, provisions eff. 9/9/10; Ord. 1553, provisions eff. 4/24/15.]

Section 110.820.45 Effective Date. A Master Plan amendment shall become effective upon signing of the adopting resolution by the Board of County Commission Chairman after a determination by the Truckee Meadows Regional Planning Commission or the Tahoe Regional Planning Agency that the amendment is in conformance with the applicable regional plan. The resolution is deemed a final action when executed and a copy is filed with the County Clerk.

[Amended by Ord. 1447, provisions eff. 9/9/10; Ord. 1553, provisions eff. 4/24/15.]

Section 110.820.50 One Year Wait on Denials. Except as provided in Section 110.820.05(c), after the denial of a Master Plan amendment, no application for a Master Plan amendment for the same or similar amendment may be accepted for one year immediately following the denial. This section shall not apply to applications denied without prejudice, which may be refiled within one year.

[Amended by Ord. 1447, provisions eff. 9/9/10; Ord. 1553, provisions eff. 4/24/15.]

Section 110.820.55 Modifications.

(a) At Planning Commission. An application for a Master Plan amendment may be amended or modified at any time by the applicant before final action is taken on it by the Commission. However, unless otherwise directed by the Director for minor modifications, an amended application package must be submitted with all exhibits and a full analysis of the impacts and findings as a new application. The Director may also charge additional fees based on the need for noticing and staff review of the amended application package. Unless otherwise directed by the Commission, new public hearings will be held on modified Master Plan amendments.

(b) If the Commission has already adopted a Master Plan amendment and a subsequent modification is being considered by Board, unless otherwise directed by the Board, an amended application package must be submitted with all exhibits and a full analysis of the impacts and findings as a new application. If the modification includes a new change or addition to the master plan, the Board must either send the amended application back through the Commission proceedings, or request a report as allowed by NRS 278.220(4) and Section 110.820.30(e).

[Amended by Ord. 1447, provisions eff. 9/9/10; Ord. 1553, provisions eff. 4/24/15.]

Section 110.820.60 Moratorium by the Board of County Commissioners. The Board may declare a moratorium on the acceptance and processing of planning applications and/or issuance of building permits for a specific geographical area and for a specified length of time for the purposes of preparing an amendment to the Master Plan.

(a) Initiation. Only the Board or the Commission through resolution may initiate the process for declaring a moratorium for this purpose. If the Board initiates the process to declare a moratorium, it shall refer the matter to the Commission for a recommendation. A moratorium of no more than 90 days shall exist from the date of approval of a resolution.

(b) Planning Commission Hearing. The Commission shall conduct a public hearing within 60 days after it has resolved to declare a moratorium or within 60 days from the date of referral by the Board.

(c) Notice of Planning Commission Hearing. Notice of the date, time and place of the public hearing shall be published in a newspaper of general circulation in Washoe County not less than 10 days prior to the date of the public hearing to be conducted by the Commission. Such notice shall describe why the moratorium is being proposed, what the proposed moratorium shall affect, the area that is affected by the moratorium, the anticipated length of time of the moratorium, and other pertinent information in such a manner that the moratorium and its effects can be clearly identified.

(d) Planning Commission Recommendation. After completion of the public hearing by the Commission, it may recommend that the Board approve a moratorium, modify the extent and area of the moratorium, or that the moratorium not be imposed. A recommendation to declare a moratorium shall require a simple majority vote of the entire membership of the Commission.

(e) Findings. When making its recommendation for approval or modification, the Commission shall, at a minimum, make the following findings of fact:

(1) The moratorium is necessary to promote the health, safety and welfare of the area described in the moratorium declaration;

(2) The moratorium is necessary to permit the staff, Commission, Board and public to focus on the efficient and effective preparation of an amendment to the Master Plan; and

(3) The moratorium is necessary because continued development during the proposed moratorium period possibly would result in development that may conflict with the plan amendment.

(f) Planning Commission Report. Within 60 days of the action by the Commission, a report describing the proposed moratorium, discussion at the public hearing, and the action and vote by the Commission shall be transmitted to the Board. Failure to report within the time limit provided in this subsection or failure to schedule a hearing within 60 days of the date of referral of the matter by the Board to the Commission shall constitute a recommendation not to declare a moratorium.

(g) Board of County Commissioners Hearing. The County Clerk of the Board shall schedule a public hearing before the Board within 30 days of receipt of the report describing the Commission's action.

(h) Notice of Board of County Commissioner's Hearing. Notice of the date, time and place of the public hearing shall be published in a newspaper of general circulation in Washoe County not less than 10 days prior to the public hearing date. Such notice shall describe why the moratorium is being proposed, what the proposed moratorium shall affect, the area that is affected by the moratorium, the anticipated length of time of the moratorium, and other pertinent information in such a manner that the moratorium and its effects can be clearly identified.

(i) Required Vote. After completion of the public hearing by the Board, it may declare a moratorium by a simple majority vote of its entire membership. The final action of the Board shall be considered final for purposes of judicial review.

(j) Affirmation of Findings. In declaring a moratorium, the Board shall, at a minimum, affirm the findings of fact contained in the Commission's recommendation or, if the Commission did not make these findings, shall, at a minimum, make the findings of fact in subsection (e) of this section.

(k) Period in Effect. A moratorium declared by the Board shall be in effect for a period of no less than 90 days and no more than 180 days from the date that the Board takes action on the recommendation of the Commission. The Board may extend the moratorium, upon an affirmation of findings as required under (j) hereinabove, for two additional consecutive periods before holding another public hearing pursuant to the provisions of this section.

[Amended by Ord. 1156, provisions eff. 3/22/02; Ord. 1447, provisions eff. 9/9/10; Ord. 1553, provisions eff. 4/24/15.]

Section 110.820.65 Certification by Electronic Means. Adopted Master Plan maps may be certified by the Director as true and accurate originals and copies through an electronic signature.

[Added by Ord. 1156, provisions eff. 3/22/02; Ord. 1447, provisions eff. 9/9/10; Ord. 1553, provisions eff. 4/24/15.]

Section 110.820.70 Minor Amendment of Master Plan.

(a) Purpose of Minor Amendment. The purpose of the minor amendment section is to provide a streamlined process for adopting changes to the Master Plan that do not have a substantive effect on the intent of the plan.

(b) Requirements for Inclusion. To qualify as a minor amendment under this section, the change must be:

(1) A change in a boundary that is based on a geographical feature, including, without limitation, topography, slopes, hydrographic features, wetland delineation and floodplains, when evidence is produced that the mapped location of the geographical feature is in error;

(2) A change made to reflect the alteration of the name of a jurisdiction, agency, department or district by the governing body, governing board or other governing authority of the jurisdiction, agency, department or district, as applicable, or by another entity authorized by law to make such an alteration; and

(3) An update of statistical information that is based on a new or revised study.

(c) Administrative Process.

(1) Initiating the Process. The Director shall have the sole authority to initiate a minor amendment to the Master Plan.

(2) Transmittal to Board of County Commissioners. Upon making the findings required under subsection (d) of this section, the Director shall forward the minor amendment to the Board.

(d) Findings.

(1) The Director must find that the proposed technical revision meets one of the conditions enumerated under section (b).

(2) The Director must also find that the proposed minor amendment is consistent with all of the following:

(i) Nevada Revised Statutes;

(ii) The Truckee Meadows Regional Plan; and

(iii) The Washoe County Master Plan.

(e) Action by Board of County Commissioners. The Board shall review proposed minor amendments to the Master Plan in conformance with this section.

(1) Time Period for Hearing. The County Clerk of the Board shall schedule a public hearing before the Board on the recommendation of approval by the Director of a minor amendment to the Master Plan within 30 days of the filing of the recommended minor amendment with the County Clerk.

(2) Notice of Public Hearing of Minor Amendment to the Master Plan. The notice of the public hearing on the minor amendment shall be provided as follows:

(i) Notice to Planning Commission and Citizen Advisory Boards. A notice setting forth the date, time and place of the public hearing on the minor amendment to the Master Plan shall be sent either by mail, or if requested by a Commission member or Citizen

Advisory Board ("CAB") member, by electronic communication if authorized by the recipient, to every member of the Commission and of the affected CAB not less than 10 days prior to the scheduled public hearing on the minor amendment. The notice shall describe the proposed minor amendment to the Master Plan, including the specific language and other pertinent information, in such a manner that the proposed minor amendment to the Master Plan and its effect(s) can be clearly identified. Any objections or comments from members of the Commission or CAB must be provided to the Director or the Board no later than the date of the public hearing on the minor amendment.

(ii) Notice to General Improvement District. A notice setting forth the date, time and place of the public hearing on the minor amendment to the Master Plan shall be sent either by mail, or if requested by a general improvement district, by electronic communication if authorized by the recipient, to the chief operating officer of the general improvement district not less than 10 days prior to the scheduled public hearing on the minor amendment. The notice to the general improvement district shall describe the proposed minor amendment to the Master Plan, including the specific language and other pertinent information, in such a manner that the proposed minor amendment to the Master Plan and its effect(s) can be clearly identified. Any objections or comments from a general improvement district must be provided to the Director or the Board no later than the date of the public hearing on the minor amendment.

(iii) Notice in Newspaper. A notice setting forth the date, time and place of the public hearing shall be published in a newspaper of general circulation in Washoe County not less than 10 days prior to the public hearing date. The notice shall describe the proposed minor amendment to the Master Plan and other pertinent information in such a manner that the Master Plan amendment request and its effect(s) can be clearly identified.

(iv) Notice of Property Owners by Mail. For a minor amendment pursuant to subsection (b)(1), a notice setting forth the time, place, purpose of hearing, map or physical description of the land involved, existing and proposed land use designations, and a brief summary of the proposed change shall be sent by mail at least 1) days before the public hearing on the minor amendment to the following persons:

(1) All owners of real property that are the subject of the minor amendment;

(2) All owners of real property within 750 feet of the property which is the subject of the minor amendment; and

(3) All tenants of any mobile home park that is located within 750 feet of the property which is the subject of the minor amendment.

(4) The commander or administrator of a military installation, as defined in Article 902, that is within 3,000 feet of the property which is the subject of the minor amendment.

(3) Board of County Commissioners' Action. The Board may take final action to adopt or deny the minor amendment to the Master Plan. Final action to approve the technical revision shall require a simple majority vote of the total membership of the Board.

[Added by Ord. 1288, provisions eff. 3/24/06. Amended by Ord. 1347, provisions eff. 11/2/07; Ord. 1447, provisions eff. 9/9/10; Ord. 1553, provisions eff. 4/24/15]

[Article 820 renamed from "Amendment of Comprehensive Plan" to "Amendment of Master Plan" with Ord. 1447, provisions eff. 9/9/10.]

Article 821
AMENDMENT OF REGULATORY ZONE

Sections:

110.821.00	**Purpose**
110.821.02	**Definitions**
110.821.05	**Requirements for Application**
110.821.10	**Supplemental Guidelines, Standards and Criteria**
110.821.15	**Review by Planning Commission**
110.821.20	**Notice**
110.821.25	**Appeals to the Board of County Commissioners**
110.821.30	**Action by Board of County Commissioners**
110.821.35	**Findings**
110.821.40	**One Year Wait on Denials**
110.821.45	**Modification of a Regulatory Zone Amendment**
110.821.50	**Moratorium**
110.821.55	**Certification of Maps by Electronic Means**
110.821.60	**Minor Amendment of Regulatory Zone Map**

Section 110.821.00 Purpose. The purpose of this article, Article 821, Amendment of Regulatory Zone, is to provide for the method for amending the Regulatory Zone map, including requests to change a Regulatory Zone affecting a parcel of land, or a portion of a parcel.

[Amended by Ord. 1554, provisions eff. 4/24/15.]

Section 110.821.02 Definitions.

(a) "Board" means the Board of County Commissioners.

(b) "Commission" means the Planning Commission.

(c) "Director" means the Director of the Division or the person or persons designated by the Director to do the action.

(d) "Division" means the Planning and Development Division of the Department of Community Services for Washoe County, or other entity that administers land use planning policies and procedures for the county.

(e) "Secretary" means the Secretary to the Planning Commission.

[Amended by Ord. 1554, provisions eff. 4/24/15.]

Section 110.821.05 Requirements for Application.

(a) Initiation of Amendments. A Regulatory Zone amendment may be initiated by the Board or the Commission through action by a simple majority vote, or by the Director. An owner of real property or the property owner's authorized agent may initiate an amendment through an application filed with the Division.

(b) Frequency of Amendment. Only the Board or the Commission may initiate an amendment of a Regulatory Zone for a parcel within 12 months after an amendment on that parcel has been adopted or denied.

(c) Completeness. No application for a Regulatory Zone amendment shall be processed until the information necessary to review and decide upon the proposed Regulatory Zone amendment is deemed complete by the Director. The Director shall make this determination within three working days of receipt of an application. Pre-application meetings between the applicant and the Director, or his/her designee, are encouraged.

[Amended by Ord. 1554, provisions eff. 4/24/15.]

Section 110.821.10 Supplemental Guidelines, Standards and Criteria. In addition to the standards and findings set forth in the Development Code, the Director may prepare supplemental guidelines for the submission of applications and minimum standards and criteria for approval applications.

[Amended by Ord. 1554, provisions eff. 4/24/15.]

Section 110.821.15 Review by Planning Commission. The Commission shall review a Regulatory Zone amendment in conformance with this section.

(a) General Provisions. The Commission shall conduct a public hearing to receive oral and written evidence relative to the application. Notice for the hearing shall be provided as specified in section 110.821.20 below. Public comments and evidence shall be reviewed to determine whether or not the findings specified in subsection (d) below can be made. The Commission shall recommend adoption, modification, or denial of the application to the Board based on the results of this review.

(b) Concurrent Processing of Applications. If a Master Plan amendment is necessary to authorize the proposed Regulatory Zone amendment, the Master Plan amendment and Regulatory Zone amendment may be processed and heard concurrently; however, the resolution recommending approval of the Regulatory Zone amendment must be expressly contingent on adoption of the Master Plan amendment and subsequent determination that it is in conformance with the Regional Plan as required by NRS 278.0282. Regulatory Zone amendments may also be processed concurrently with other applications (such as special use permits) and the Director shall decide the order of review.

(c) Action. The Commission may do any of the following. A simple majority vote of the members of the Commission present at the hearing is required for a recommendation of adoption or a denial of the amendment.

(1) Recommend Adoption. The Commission may adopt a resolution making the required findings and recommending adoption of the Regulatory Zone amendment to the Board. The resolution shall refer expressly to the maps, descriptive matter, or other matter intended by the Commission to constitute the amendment. Since it is only a recommendation that must be acted on by the Board, the resolution is not a final action for purposes of appeal or judicial review.

(2) Denial. If a motion to adopt the Regulatory Zone amendment does not achieve the required number of votes, or if a motion to deny the adoption is approved, the Regulatory Zone amendment is denied. If a Regulatory Zone amendment is denied, the Commission may (by separate motion if necessary) determine if the denial is with or without prejudice. When a Regulatory Zone amendment is denied, the Commission must give a reason why, including an explanation of which of the required findings cannot be made, either as a part of the motion, or by individual comments of the Planning Commissioners made for the record. A denial is a final action on the application and will not be referred to the Board unless appealed. A written notice of the denial shall be prepared by and filed with the Secretary, and sent to the applicant, at which time the denial may be appealed to the Board as provided in Section 110.912.20 of the Development Code.

(3) No Action. If no action is taken on a motion (i.e., no motion is made, all motions die for lack of a second, or a tie vote occurs and the applicant has not asked for a postponement under Commission Rules), any person aggrieved by the non-action may appeal to the Board for a decision. A written notice describing the attempts to take action shall be prepared by and filed with the Secretary, and sent to the applicant and when that is done, the non-action may be appealed to the Board as provided in Section 110.912.20 of the Development Code.

(d) Findings. To make a recommendation for approval, all of the following findings must be made by the Commission:

(1) Consistency with Master Plan. The proposed amendment is in substantial compliance with the policies and action programs of the Master Plan.

(2) Compatible Land Uses. The proposed amendment will provide for land uses compatible with (existing or planned) adjacent land uses, and will not adversely impact the public health, safety or welfare.

(3) Response to Change Conditions; more desirable use. The proposed amendment responds to changed conditions or further studies that have occurred since the plan was adopted by the Board of County Commissioners, and the requested amendment represents a more desirable utilization of land.

(4) Availability of Facilities. There are or are planned to be adequate transportation, recreation, utility, and other facilities to accommodate the uses and densities permitted by the proposed amendment.

(5) No Adverse Effects. The proposed amendment will not adversely effect the implementation of the policies and action programs of the Washoe County Master Plan.

(6) Desired Pattern of Growth. The proposed amendment will promote the desired pattern for the orderly physical growth of the County and guides development of the County based on the projected population growth with the least amount of natural resource impairment and the efficient expenditure of funds for public services.

(7) Effect on a Military Installation When a Military Installation is Required to be Noticed. The proposed amendment will not affect the location, purpose and mission of a military installation.

[Amended by Ord. 1554, provisions eff. 4/24/15.]

Section 110.821.20 Notice. Notice for a Regulatory Zone amendment shall be given as required by NRS 278.260. Owners of all real property to be noticed pursuant to this section shall be those owners identified on the latest County Assessor's ownership maps and records. Such notice is complied with when notice is sent to the last known addresses of such real property owners as identified in the latest County Assessor's records. Any person who attends the public hearing shall be considered to be legally noticed unless those persons can provide evidence that they were not notified according to the provisions of this section.

(a) In addition, a copy of the written notice shall be sent to the chief operating officer of any general improvement district serving the property.

(b) In addition, if any part of the property is within 3,000 feet of a military installation, written notice must be given to the commander of the military installation.

[Amended by Ord. 1554, provisions eff. 4/24/15.]

Section 110.821.25 Appeals to Board of County Commissioners. Any person who is aggrieved by a final decision or non-action of the Planning Commission may appeal to the Board as provided in Section 110.912.20 of the Development Code.

[Amended by Ord. 1554, provisions eff. 4/24/15.]

Section 110.821.30 Action by Board of County Commissioners. If the Commission recommends approval of a Regulatory Zone amendment, a copy of the resolution shall be filed with the County Clerk, and the Board shall review the Regulatory Zone amendment in accordance with the provisions of this section.

(a) Notice of Hearing. A public hearing shall be noticed as set forth in Section 110.821.20 of this article.

(b) Time Period for Hearing. The County Clerk shall schedule a public hearing before the Board on the recommendation of the Commission to occur within 60 days of the filing of the Planning Commission's Resolution with the County Clerk.

(c) Board Action.

(1) The Board shall adopt, adopt with modifications, or deny the proposed amendment. An adoption or denial of a proposed Regulatory Zone amendment requires an affirmative vote of a simple majority of the total membership of the Board. If the Board denies an amendment, the reason for the denial (i.e., findings which cannot be made) shall either be stated in the motion or discussed on the record by individual Board members.

(2) Adoption of a Regulatory Zone amendment shall be by resolution of the Board, which shall refer expressly to the maps, descriptive matter, or other matter intended by the Board to constitute the amendment. If the

Regulatory Zone amendment is processed concurrently with a Master Plan amendment, the approving motion shall state that the approval is subject to adoption of the Master Plan amendment. The resolution approving the Regulatory Zone amendment shall not be executed by the chair until the Master Plan amendment is adopted and a determination is made by the Regional Planning Commission that the proposed Master Plan amendment conforms to the Regional Plan.

(3) If the Board denies a Regulatory Zone amendment, a written notice shall be prepared by the Director and sent to the applicant.

(4) The final action (actual execution of a resolution to approve, or approval of a motion to deny) by the Board shall be final for purposes of judicial review. A written notice of the action by the Board shall be prepared by the Director and mailed to the applicant and a copy shall be filed with the County Clerk. The period for petitioning for judicial review then starts.

[Amended by Ord. 1554, provisions eff. 4/24/15.]

Section 110.821.35 Findings. When taking final action on the Commission's recommendation, the Board shall make part of the record its affirmation, modification or rejection of the findings of fact by the Commission, as well as any other findings of fact that the Board deems to be relevant. If the Commission made no findings, the Board shall either make the findings required for adoption of the Regulatory Zone amendment, or determine which findings cannot be made in the case of a denial either as a part of the motion or by comments of the individual Board members.

[Amended by Ord. 1554, provisions eff. 4/24/15.]

Section 110.821.40 One Year Wait on Denials. After the denial of a Regulatory Zone amendment, no application for a Regulatory Zone amendment for the same or similar amendment may be accepted for one (1) year immediately following the denial. This section shall not apply to applications denied without prejudice, which may be refiled within one (1) year.

Section 110.821.45 Modification of a Regulatory Zone Amendment. Proposed modifications of an adopted Regulatory Zone map amendment require a new application following the same procedure required for the initial application.

[Amended by Ord. 1554, provisions eff. 4/24/15.]

Section 110.821.50 Moratorium. The Board may declare a moratorium on the acceptance and processing of planning applications and/or issuance of building permits for a specific geographical area and for a specified length of time for the purposes of preparing an amendment to the Regulatory Zone map.

(a) Initiation. Only the Board or the Commission through resolution may initiate the process for declaring a moratorium for this purpose. If the Board initiates the process to declare a moratorium, it shall refer the matter to the Commission for a recommendation. A moratorium of no more than 90 days shall exist from the date of approval of a resolution.

(b) Planning Commission Hearing. The Commission shall conduct a public hearing within 60 days after it has resolved to declare a moratorium or within 60 days from the date of referral by the Board.

(c) Notice of Planning Commission Hearing. Notice of the date, time and place of the public hearing shall be published in a newspaper of general circulation in Washoe County not less than 10 days prior to the date of the public hearing to be conducted by the Commission. Such notice shall describe why the moratorium is being proposed, what the proposed moratorium shall affect, the area that is affected by the moratorium, the anticipated length of time of the moratorium, and other pertinent information in such a manner that the moratorium and its effects can be clearly identified.

(d) Planning Commission Recommendation. After completion of the public hearing by the Commission, it may recommend that the Board adopt a moratorium, modify the extent and area of the moratorium, or that the moratorium not be imposed. A recommendation to declare a moratorium shall require a simple majority vote of the members of the Commission present at the hearing.

(e) Findings. When making its recommendation for approval or modification, the Commission shall, at a minimum, make the following findings of fact:

(1) The moratorium is necessary to promote the health, safety and welfare of the area described in the moratorium declaration;

(2) The moratorium is necessary to permit the staff, Commission, Board and public to focus on the efficient and effective preparation of an amendment to the Regulatory Zone map; and

(3) The moratorium is necessary because continued development during the proposed moratorium period possibly would result in development that may conflict with the amendment.

(f) Planning Commission Report. Within 60 days of the action by the Commission, a report describing the proposed moratorium, discussion at the public hearing, and the action and vote by the Commission shall be transmitted to the Board. Failure to report within the time limit provided in this subsection or failure to schedule a hearing within 60 days of the date of referral of the matter by the Board to the Commission shall constitute a recommendation not to declare a moratorium.

(g) Board Hearing. The County Clerk shall schedule a public hearing before the Board within 30 days of receipt of the report describing the Commission's action.

(h) Notice of Board Hearing. Notice of the date, time and place of the public hearing shall be published in a newspaper of general circulation in Washoe County not less than 10 days prior to the public hearing date. Such notice shall describe why the moratorium is being proposed, what the proposed moratorium shall affect, the area that is affected by the moratorium, the anticipated length of time of the moratorium, and other pertinent information in such a manner that the moratorium and its effects can be clearly identified.

(i) Required Vote. After completion of the public hearing by the Board, the Board may declare a moratorium by a simple majority vote of its entire membership. The final action of the Board shall be considered final for purposes of judicial review.

(j) Affirmation of Findings. In declaring a moratorium, the Board shall, at a minimum, affirm the findings of fact contained in the Commission's

recommendation or, if the Commission did not make these findings, shall, at a minimum, make the findings of fact in subsection (e) of this section.

(k) Period in Effect. A moratorium declared by the Board shall be in effect for a period of no less than 90 days and no more than 180 days from the date that the Board takes action on the recommendation of the Commission. The Board may extend the moratorium, upon an affirmation of findings as required under (j) hereinabove, for two additional consecutive periods before holding another public hearing pursuant to the provisions of this section.

[Amended by Ord. 1554, provisions eff. 4/24/15.]

Section 110.821.55 Certification of Maps by Electronic Means. Adopted Regulatory Zone maps may be certified by the Director as true and accurate originals and copies through an electronic signature.

[Amended by Ord. 1554, provisions eff. 4/24/15.]

Section 110.821.60 Minor Amendment of Regulatory Zone map.

(a) Purpose of Minor Amendment. The purpose of the minor amendment section is to provide a streamlined process for adopting changes to the Regulatory Zone map that do not have a substantive effect on the intent of the plan.

(b) Requirements for Inclusion. To qualify as a minor amendment under this section, the change must be:

(1) A change in a boundary that is based on a geographical feature, including, without limitation, topography, slopes, hydrographic features, wetland delineation and floodplains, when evidence is produced that the mapped location of the geographical feature is in error;

(2) A change made to reflect the alteration of the name of a jurisdiction, agency, department or district by the governing body, governing board or other governing authority of the jurisdiction, agency, department or district, as applicable, or by another entity authorized by law to make such an alteration;

(3) An update of statistical information that is based on a new or revised study; or

(4) A change made to reflect Master Plan category amendments due to properties being included in or removed from a Sphere of Influence as established in the Truckee Meadows Regional Plan.

(c) Administrative Process.

(1) Initiating the Process. The Director shall have the sole authority to initiate a minor amendment to the Regulatory Zone map.

(2) Transmittal to Board of County Commissioners. Upon making the findings required under subsection (d) of this section, the Director shall forward the minor amendment to the Board.

(d) Findings.

(1) The Director must find that the proposed technical revision meets one of the conditions enumerated under subsection (b).

(2) The Director must also find that the proposed minor amendment is consistent with all of the following:

(i) Nevada Revised Statutes;

(ii) The Truckee Meadows Regional Plan; and

(iii) The Washoe County Master Plan.

(e) Action by Board of County Commissioners. The Board shall review proposed minor amendments to the Regulatory Zone map in conformance with this section.

(1) Time Period for Hearing. The Board shall conduct a public hearing on the proposed minor amendment within 60 days of the filing of the proposed minor amendment with the County Clerk.

(2) Notice of Public Hearing of Minor Amendment to the Regulatory Zone map. The notice of the public hearing on the minor amendment shall be in accordance with Section 110.821.20 of this Article.

(3) Board of County Commissioners' Action. The Board may take final action to adopt or deny the minor amendment to the Regulatory Zone map. Final action to adopt the minor amendment shall be by a resolution approved by a simple majority vote of the total membership of the Board. The resolution shall refer expressly to the maps, descriptive matter, or other matter intended by the Board to constitute the minor amendment.

[Article 821, Amendment of Regulatory Zone, created by Ord. 1447, provisions eff. 9/9/1; Amended by Ord. 1554, provisions eff. 4/24/15.]

Article 822
PROVISIONS FOR AMENDMENTS TO LOCAL MASTER PLANS AND ZONE CHANGES IN AREAS SUBJECT TO COOPERATIVE PLANNING UNDER THE REGIONAL PLAN SETTLEMENT AGREEMENT

Sections:

110.822.00	**Introduction**
110.822.05	**Purpose**
110.822.10	**Applicability**
110.822.15	**Definitions**
110.822.20	**Master Plan Policies and Goals, and Zoning Amendments Criteria**
110.822.25	**Findings for Regional Form and Pattern including Open Space**
110.822.30	**Findings for Housing**
110.822.35	**Findings for Concurrency, Timing and Phasing of Infrastructure**
110.822.40	**Findings for Public Service Levels and Fiscal Effect**
110.822.45	**Findings for Open Space, Resource Constraints and Cooperative Planning Considerations Not Elsewhere Addressed**

Section 110.822.00 Introduction. Subsequent to adoption of the updated 2002 Truckee Meadows Regional Plan, the Regional Plan Settlement Agreement Case No. CV02-03469 (hereinafter referred to as "settlement agreement") was reached that disposed of certain litigation over the Regional Plan and related matters. Among subsequent actions required by the settlement agreement was the development of certain specific objective criteria that would establish findings necessary for zone changes within areas defined as "cooperative planning areas" in the Truckee Meadows. This is addressed in this article. The settlement agreement also required development of certain minimum development standards common throughout the entire cooperative planning area to minimize potential negative impacts of new development on existing development within the incorporated and unincorporated areas. These common minimum standards are addressed in Article 434, Regional Development Standards within Cooperative Planning Areas and all of Washoe County. Together, Articles 434 and 822 are intended to promote effective implementation of the Truckee Meadows Regional Plan of 2002 by applying specific standards and criteria, and requiring findings during the local zoning and master plan amendment process. Principle #1 of the Regional Plan, adopted May 9, 2002, states that the plan:

> "*…aims to limit the spread of the urban footprint and direct more development of homes and jobs toward the traditional core of the region—its downtowns, its designated Regional Centers, and its traditional transportation corridors. This strategy will redirect growth that might otherwise occur at the urban fringe; make more efficient use of land, natural resources and community services; save*

money on infrastructure; reduce dependence on the private automobile; promote multi-modal transportation choices; protect air quality; conserve energy; preserve designated open space; and create more affordable communities. This strategy, which will result in a more compact form of future development, as well as a more diverse mix of uses, will provide a variety of living and working situations, and will promote human, natural and economic capital, strengthen our communities and ensure that the region's assets are accessible to all."

[This Section added by Ord. 1192, provisions eff. 3/21/03].

Section 110.822.05 Purpose.

(a) Articles 434 and 822 are intended to implement certain portions of the October 17, 2002 Regional Plan Settlement Agreement and to function as the master documents for the settlement agreement. These standards will be on file with all settlement signatories and the Court.

(b) The cooperative planning criteria and development standards have been developed and implemented to provide better assurance to the communities and citizens as to what, where, when and how development will occur within their neighborhoods and to what standards or criteria these areas will be developed.

(c) For the full term of the 2002 Regional Plan, the codes of Reno, Sparks and Washoe County must contain all the provisions specified in Articles 434 and 822. Codes for any of these jurisdictions may exceed these requirements, but they shall contain no provisions that contradict or weaken the effect of these provisions. Any variance to the provisions contained within this article, including any proposed modifications pursuant to special use permit or other special exception, shall be processed only as specified in NRS 278.300 (1)(c) as that statutory provision is implemented in Article 110.804 of the Washoe County Development Code and [the] corresponding provisions of the City of Sparks and City of Reno codes. Specific Plan, Transit Oriented Development, Emerging Employment Centers, Planned Unit Development or any other area within the cooperative planning areas may not be exempted from these provisions. Neither the Regional Plan nor any of the codes of the three jurisdictions, shall be amended in any way so as to negate the provisions of these articles during the term of the 2002 Regional Plan. Notwithstanding the above, any or all of these provisions may be amended through majority vote of each of the three local governing bodies.

[This Section added by Ord. 1192, provisions eff. 3/21/03].

Section 110.822.10 Applicability. The following policies apply to amendments to local master plans and zoning changes throughout the cooperative planning areas of the Truckee Meadows region, including Transit Oriented Development areas and Emerging Employment Centers within cooperative planning areas, unless the text of the specific policy states otherwise. "Cooperative Planning Areas" means:

(a) The expanded city spheres of influence (SOIs), post-May 8, 2002;

(b) Land within the unincorporated area and outside the expanded spheres of influence, but within the Truckee Meadows Service Area (TMSA) that was identified by the cities as within the "areas of interest" in the settlement agreement; and

(c) Lands annexed by a city under the provisions of NRS 268.670 outside the pre-May 9, 2002 spheres of influence, except as prescribed in the settlement agreement in Nevada Supreme Court Case No. 38749 (also known as the Verdi matter).

[This Section added by Ord. 1192, provisions eff. 3/21/03].

Section 110.822.15 Definitions. Except as otherwise noted in this subsection or in a specific section that follows, the definitions of terms used in this article are the same as the definitions on pp. 54 through 64 of the Truckee Meadows Regional Plan adopted May 9, 2002.

(a) "Development constraints areas" shall also include "earthquake fault areas" and "natural recharge areas", as well as wetlands and areas with greater than thirty (30) percent slope.

(b) "Earthquake fault areas" are areas within fifty (50) feet of the line of a known earthquake fault.

(c) "Natural recharge areas" are areas that have been identified as a result of scientific study to be particularly important to maintaining the recharge of a particular hydrographic basin.

[This Section added by Ord. 1192, provisions eff. 3/21/03].

Section 110.822.20 Master Plan Policies and Goals, and Zoning Amendments Criteria. Local governments considering amendments within cooperative planning areas shall be required to make all the applicable findings identified in Sections 110.822.25 through 110.822.45.

[This Section added by Ord. 1192, provisions eff. 3/21/03].

Section 110.822.25 Findings for Regional Form and Pattern including Open Space.

(a) Findings for Regional Plan Policy 1.1.6 – Rural Development Area (for an amendment located within a Rural Development Area): (See subsection (i) for Truckee Meadows Service Area findings). The following findings must be made:

(1) The amendment does not allow new divisions of land that would create a parcel less than five (5) acres in size, except as allowed by existing zoning/master plan classifications and District Health Regulations as of May 9, 2002.

(2) The permitted uses do not require community water or sewage disposal systems or new publicly maintained roads or parks.

(b) Findings for Policies 1.1.8 and 2.1.1 – Development Constraints Area (for an amendment located within a Development Constraints Area). The following findings must be made:

(1) Allowed land uses are limited to communication facilities, recreational facilities, parks and open space, utilities, agriculture, forestry, mining, transportation infrastructure necessary to service development, and residential uses that are limited to a maximum density of one (1) unit per forty (40) acres or one (1) unit per parcel in existence on May 9, 2002.

(2) Open space identified for future acquisition, parkland and natural recharge areas, to the extent known, shall be maintained at current densities and be identified in the Regional Open Space Plan, local master plans and local parks master plans of the entities with jurisdiction.

(3) For any use not listed in finding (1) above: it must be found that the uses allowed by the proposed master plan and/or land use designation within the Development Constraints Area are isolated, enhance the overall design of a proposed project, and preserve as open space a two to one (2:1) ratio of non-constrained area for every constrained area that is developed.

(c) Findings for Policies 1.1.9 and 2.2.1 – Slope Management (15 percent to 30 percent) (for an amendment with identified slopes in excess of 15 percent). The following findings must be made:

(1) The local government making the amendment already has in effect an applicable adopted Slope Management Plan for slopes greater than fifteen (15) percent but less than thirty (30) percent that includes the entire area in which the amendment is proposed and that has been found in conformance with the Regional Plan. To be found in conformance, that Slope Management Plan must contain, at a minimum:

(i) Provisions sufficient to ensure full compatibility with the development standards contained in Article 434 throughout the entire area of the Slope Management Plan.

(ii) Additional requirements, including proposed and prohibited land use (both master plan and zoning, if different) and a map, sufficient to mitigate the visual impact of the Visually Important Ridgeline area development on existing developed areas and ensure that, at a minimum, throughout the entire area of the Slope Management Plan and its plan. Development on such slopes will not degrade the scenic, public safety, and environmental values of the area to be developed, and the region as a whole.

(●) Development on such slopes incorporates on-site and off-site mitigation measures for impacts to habitat and water quality, and for fiscal effects associated with higher-than-normal costs of infrastructure, public safety facilities, and public safety services on slopes greater than fifteen (15) percent but less than thirty (30) percent.

(●) Recharge areas are protected; and development in recharge areas is discouraged and, if it occurs, the impact on recharge is fully mitigated.

(●) Activities comply with the terms of National Pollutant Discharge Elimination System (NPDES) permits.

(iii) An impact assessment that reasonably shows that, at buildout, the management strategy will assure that above requirements of subsection (ii) will be met.

(2) The amendment is in conformance with that Slope Management Plan.

(d) Findings for Policies 1.1.12 and 1.2.16 – Emerging Employment Centers (for an amendment in an area identified as an Emerging Employment Center). The following findings must be made:

(1) The local government making the amendment already has in effect an applicable adopted development plan for the entire Emerging Employment Center in which the amendment is proposed, and which has been found in conformance with the Regional Plan. To be found in conformance, that Emerging Employment Center plan must contain, at a minimum, applicable throughout the entire area of the Emerging Employment Center:

(i) Requirements, including proposed and prohibited land use (both master plan and zoning, if different) and a map, sufficient to mitigate the visual impact of the Emerging Employment Center area development on existing developed areas and ensure that, at a minimum, throughout the entire area of the Emerging Employment Center and its plan:

(●) Adequate non-residential land supply;

(●) Convenient access to major roads and/or freeways;

(●) Pedestrian connections throughout the areas and to nearby residential areas;

(●) A plan for transit service;

(●) Adequate residential land supply in the surrounding area to house the anticipated number of employees;

(●) Maintenance of the character of nearby standards; and

(●) Compatibility with reverse commute and trip reduction strategies.

(ii) An impact assessment that reasonably shows that, at buildout, the management strategy will assure that requirements of subsection (i) will be met.

(iii) A professional economic analysis has been provided that reasonably shows that, at buildout, the tax revenues for both the city and Washoe County, generated by the uses and resident population of the Emerging Employment Center, shall meet or exceed the costs of services provided by city and county government to the uses and to the resident population in the Emerging Employment Center. These costs shall include costs for both the maintenance and replacement of infrastructure. If this analysis requires intensity to meet this condition, the intensity is specifically required by the plan.

(iv) All utilities that will be providing services to the Emerging Employment Center have submitted statements that, under the rates and fee structure of the utility, the cost of providing service to the Emerging Employment Center will not be shifted onto ratepayers in other areas.

(2) The amendment is in conformance with that plan.

(e) Findings for Regional Plan Policy 1.2.1 – Desired population and employment distribution and Jobs/Housing balance. The amendment must demonstrate that it will contribute to, and further the achievement of the purposes of, Regional Plan Policy 1.2.1 through application of the following criteria:

(1) The amendment shall provide a detailed up-to-date assessment of the impact on the desired population, housing and employment distribution articulated in Regional Plan Policy 1.2.1. The model for this review shall be developed, maintained and updated annually by the Truckee Meadows Regional Planning Agency, in cooperation with local governments and affected entities. This annual update shall also assess where and how the cost of housing has been impacted by the Regional Plan policies.

(2) The amendment must make a finding that the distribution of population, housing and employment envisioned in Regional Plan Policy 1.2.1 will be reinforced by the proposed amendment. Infill projects inside the McCarran Ring should be encouraged, and development outside should be discouraged, until such time as the infill growth standard is met or exceeded.

(f) Findings for Regional Plan Policy 1.2.12 – Regional Centers (for an amendment within an identified Regional Center).

(1) The local government making the amendment already has, in effect, an applicable adopted development plan for the entire Regional Center in which the amendment is proposed and that Regional Center plan has been found in conformance with the Regional Plan. To be found in conformance, that Regional Center plan must contain, at a minimum, applicable throughout the entire area of the Regional Center:

(i) Requirements, including proposed and prohibited land use (both master plan and zoning, if different) and a map, sufficient to ensure that, at a minimum, applicable throughout the entire area of the Regional Center and its plan:

(●) Minimum residential densities for new development of eighteen (18) units per acre of residential, residential and for average densities of thirty (30) units per acre of residential within the entire area of the Regional Center plan;

(●) Minimum floor area ratios (FAR) for non-residential developments and mixed use developments of 1.5 FAR;

(●) Multi-modal transportation including future transit support where called for by the Regional Transportation Commission planning (supporting statement by Regional Transportation Commission required); and

(●) The required intensity and other features of the buildout under the plan is not detrimental to the character of any adjacent, existing communities.

(ii) An impact assessment that reasonably shows that, at buildout, the Regional Center plan will assure that requirements of subsection (i) will be met.

(iii) A professional economic analysis has been provided that reasonably shows that, at buildout, the tax revenues for both the city and Washoe County, generated by the uses and resident population of the Regional Center, shall meet or exceed the costs of services provided by city and county government to the uses and to the resident population in the Regional Center. These costs shall include costs for both the maintenance and replacement of infrastructure. If this analysis requires intensity to meet this condition, the intensity is specifically required by the plan.

(iv) All utilities that will be providing services to the Regional Center have submitted statements that, under the rates and fee structure of the utility, the cost of providing service to the Regional Center will not be shifted onto ratepayers in other areas.

(2) The amendment is in full conformance with that plan.

(g) Findings for Regional Plan Policies 1.2.8, 1.2.9 and 1.2.12 – Transit Oriented Development Corridors (for an amendment within a Transit Oriented Development). The amendment must be found to make a significant positive contribution to achieving the purposes and objectives of the Transit Oriented Development Corridors. The following findings must be made:

(1) The local government making the amendment already has, in effect, an applicable adopted development plan for the entire Transit Oriented Development Corridor in which the amendment is proposed; and that plan has been found in conformance with the Regional Plan. To be found in conformance, that Transit Oriented Development Corridor plan must contain, at a minimum, applicable throughout the entire area of the Transit Oriented Development corridor and plan:

(i) Requirements, including proposed and prohibited land use (both master plan and zoning, if different) and a map, sufficient to ensure that, at a minimum:

(●) Minimum residential densities for new development of eighteen (18) units per acre of residential, residential and for average densities of thirty (30) units per acre of

residential within the entire area of the Transit Oriented Development Corridor Plan;

(●) Minimum floor area ratios (FAR) for non-residential developments and mixed use developments of 1.5 FAR;

(●) Within one-quarter mile of a designated transportation route, as identified in Regional Plan Policy 1.2.8;

(●) The required intensity and other features of the buildout under the plan is not detrimental to the character of any adjacent, existing communities;

(●) Compatibility with avigation and operational requirements of the Airport Authority of Washoe County (supporting statement by Airport Authority required);

(●) Land use and design that supports and enhances multi-modal transportation, including future transit, and that is compatible with Regional Transportation Commission planning (supporting statement by Regional Planning Commission required); and

(●) Human scale design.

(ii) An impact assessment that reasonably shows that, at buildout, the Regional Center plan will assure that requirements of subsection (i) will be met.

(2) The amendment is in conformance with the adopted conforming Transit Oriented Development Corridor Plan.

(h) Findings for properties identified as potential Open Space within the adopted Regional Open Space Plan:

(1) A finding that the property owner has noticed local, regional, state, national and federal organizations charged with the mission of maintaining or enhancing open space in this region that an amendment to the cooperative plan to change zoning will be submitted.

(2) Open space identified for future acquisition, parkland and natural recharge areas, to the extent known, shall be maintained at current densities and identified on the Regional Open Space Plan, local master plans and local parks master plans of the entities with jurisdiction.

(i) Findings for Regional Plan Policies 1.3.2 and 1.3.3 – Truckee Meadows Services Area (TMSA) – development standards (for an amendment in the Truckee Meadows Services Area outside the sphere of influence).

(1) The local government making the amendment already has an area plan that includes the entire area to be amended in the Truckee Meadows Services Area outside the cities' sphere of influence, and that area plan has been found in conformance with the Regional Plan. That area plan

must contain, at a minimum, applicable throughout the entire area of the area plan:

(i) Requirements, including proposed and prohibited land use (both master plan and zoning, if different) and a map, sufficient to ensure that, at a minimum, throughout the entire area of the area plan:

(●) Residential density no greater than three (3) dwelling units per acre in the Truckee Meadows Services Area;

(●) Commercial retail is restricted to a floor area of sixty thousand (60,000) square feet or less for any single tenant and a maximum size for any single development to one hundred thousand (100,000) square feet of floor area;

(●) Commercial office is restricted to a floor area of twenty thousand (20,000) square feet or less for any single tenant and a maximum size for any single development to forty thousand (40,000) square feet of floor area;

(●) No industrial or warehouse uses;

(●) Institutional/civic uses will be commensurate with the surrounding immediate community;

(●) There will be a maximum ten (10) acres of contiguous non-residential properties and these must be separated by a minimum of one (1) mile from the nearest non-residential property;

(●) Open space identified for future acquisition, parkland and natural recharge areas, to the extent known, shall be maintained at current densities and identified in the Regional Open Space Plan, local master plans and local parks master plans of the entities with jurisdiction;

(ii) Such alternative standards as may be submitted and approved as allowed in the 2002 Truckee Meadows Regional Plan; and

(iii) The proposed amendment is in conformance with the adopted area plan.

(j) Findings for Visually Important Ridgeline (VIR) areas, as identified on the Visually Important Ridgelines & Related Landforms map dated May 1994 in the Washoe County Regional Open Space Plan and those significant ridgelines identified on the Development Suitability maps contained within the August 13, 2002 Washoe County Forest Area Plan, Washoe County North Valleys Area Plan and Washoe County Verdi Area Plan, shall be considered in applications for master plan and zoning map amendments.

(1) The local government making the amendment already has an applicable adopted VIR area plan which has been found in conformance with the

Regional Plan and that includes all of the area of the proposed amendment. To be found in conformance, that VIR area plan must contain, at a minimum, applicable throughout the entire area of the VIR Plan:

(i) Identification of potential developable areas (0 to 30 percent slope).

(ii) Description of the existing landscape of such slope.

(iii) Requirements, including proposed land use (both master plan and zoning, if different) and a map to specify allowable and prohibited land uses, and development standards[1] sufficient to mitigate the visual impact of the VIR area development on existing developed areas and ensure that, at a minimum:

(●) The maximum height, placement, design and coloration of structures will minimize visual impacts of areas identified in the sight-line analyses; and

(●) Minimum setbacks and height limits for structures on the back sides of slopes will minimize visual impacts of areas identified in the sight-line analyses.

(2) The proposed amendment is in conformance with the adopted conforming VIR area plan.

[This Section added by Ord. 1192, provisions eff. 3/21/03].

Section 110.822.30 Findings for Housing. The amendment must make a positive contribution to community housing goals as articulated by the following findings:

(a) The amendment is consistent with criteria for densities established in Section 110.822.25, Findings for Regional Form and Pattern including Open Space, including subsections (a), (b), (f), (g) and (i).

(b) The amendment is consistent with the local governments' requirements for inclusionary affordable housing as identified in Regional Plan Policy 1.1.13, which must be reviewed by Regional Planning no later than October 2004.

(c) Prior to conformance of the local governments' requirements for inclusionary affordable housing, the amendment must document that it is not detrimental to the HOME Consortium's housing efforts and will provide affordable, accessible and appropriate housing opportunities and options to the community. Agency comments from the HOME Consortium must be solicited on the amendment.

[This Section added by Ord. 1192, provisions eff. 3/21/03].

[1] In developing the VIR plan and standards, a minimum of three (3) sight-line analyses shall have been provided from the existing built environment, generally within ¼ to ½ mile of the project site. Staff members of the local governments involved in the cooperative plan shall jointly select the locations for the sight-line analyses to represent typical views of the project site from nearby neighborhoods. The development standards of the conforming VIR area plan become part of the development standards of Article 434 for ridgelines and must specify for all developable areas in the VIR area.

Section 110.822.35 Findings for Concurrency, Timing and Phasing of Infrastructure. The following findings, either (a) or (b), as applicable, must be made. Each amendment must demonstrate how it makes a positive contribution to concurrent, orderly, efficient and safe provision of community infrastructure.

(a) Service capacity for water, wastewater, stormwater, roads and parks exists or is planned to exist prior to construction of development within the amendment.

(b) When using a community system, each of the following studies must identify and mitigate the cumulative impacts on existing infrastructure and facilities plans. These conceptual studies must propose infrastructure mitigation that constitutes reasonable care with respect to adjacent or adjoining areas.

(1) The amendment includes a conceptual drainage study consistent with the adopted standards of the local government.

(2) The amendment includes a conceptual wastewater treatment and conveyance, including septic systems, study consistent with the adopted standards of the local government.

(3) The amendment includes a conceptual traffic study that is consistent with the adopted Regional Transportation Plan.

(4) The amendment includes a conceptual potable water supply and conveyance, including individual wells, study.

(5) The amendment includes a conceptual parks plan consistent with the adopted standards of the local government.

(6) The proposed cooperative plan amendment that proposes a community system must identify a funding plan for the improvement program.

[This Section added by Ord. 1192, provisions eff. 3/21/03].

Section 110.822.40 Findings for Public Service Levels and Fiscal Effect. Through application of the following criteria and assessments, the amendment must support a finding that it will not cause, or will mitigate, adverse impacts upon the cost and efficient provision of public services (including public safety, recreation and education) to existing residents and communities within Washoe County:

(a) The amendment must assess the impacts to public services including police, fire and public recreation based on a level of service that has been adopted by the local government and this assessment reasonably demonstrates that the level of service to the existing communities is not negatively impacted.

(b) The amendment provides mitigation measures when the impact to public services drops below the adopted level of service for the local government.

(c) The proposed Cooperative Plan Amendment must analyze the fiscal revenue and service expenditures of development.

(d) The amendment must identify and evaluate the impacts on public schools.

[This Section added by Ord. 1192, provisions eff. 3/21/03].

110.822.45 Findings for Open Space, Resource Constraints and Cooperative Planning Considerations Not Elsewhere Addressed.

(a) Findings for Wildlife:

(1) The proposed amendment provides a full and detailed assessment of wildlife habitats that have been identified in the Regional Open Space Plan. The amendment must be found to include preservation, enhancement and/or mitigation measures as necessary for the maintenance of habitat.

(2) The amendment demonstrates how it is not detrimental to the protection, preservation and enhancement of wildlife habitat, as applicable.

(b) Findings for Water-Related Constraints: The amendment is compatible with either the interim or updated plan and policies (whichever is in effect) drafted and adopted by the Regional Water Planning Commission (RWPC) in accordance with the terms of the settlement agreement.

(c) Findings for Open Space and Natural Recharge Areas. Open space identified for future preservation by acquisition, parkland and natural recharge areas, to the extent known, shall be maintained at current densities and identified in the Washoe County Regional Open Space Plan, local master plans and local parks master plans of the entities with jurisdiction.

[This Section added by Ord. 1192, provisions eff. 3/21/03].

Division Nine - General Provisions
CONTENTS

	Page
General Provisions: Title and Contents	900-1
Definitions	902-1
Nonconformance	904-1
Fees	906-1
Issuance of Permits and Licenses	908-1
Enforcement	910-1
Establishment of Commissions, Boards and Hearing Examiners	912-1
Establishment of Department	914-1
Establishment of Committees	916-1
Adoption of Development Code	918-1
Definitions for Floodplain Management	920-1

LIST OF FIGURES

Figure 110.902.15.BH1: Determination of Building Height in Feet	902-4
Figure 110.902.15.LW1: Distance Between Side Lot Lines	902-15
Figure 110.902.15.LW2: Distance Between Midpoints	902-15
Figure 110.902.15.LW3: Area/Average Width	902-16

Article 900
GENERAL PROVISIONS: TITLE AND CONTENTS

Sections:

110.900.00	**Title**
110.900.05	**Contents**

Section 110.900.00 Title. Division Nine of Chapter 110, Development Code, is entitled General Provisions.

Section 110.900.05 Contents. Division Nine consists of the following articles:

(a) ARTICLE 900 GENERAL PROVISIONS: TITLE AND CONTENTS

(b) ARTICLE 902 DEFINITIONS

(c) ARTICLE 904 NONCONFORMANCE

(d) ARTICLE 906 FEES

(e) ARTICLE 908 ISSUANCE OF PERMITS AND LICENSES

(f) ARTICLE 910 ENFORCEMENT

(g) ARTICLE 912 ESTABLISHMENT OF COMMISSIONS, BOARDS AND HEARING EXAMINERS

(h) ARTICLE 914 ESTABLISHMENT OF DEPARTMENT

(i) ARTICLE 916 ESTABLISHMENT OF COMMITTEES

(j) ARTICLE 918 ADOPTION OF DEVELOPMENT CODE

Article 902
DEFINITIONS

Sections:

110.902.00	**Purpose**
110.902.05	**Applicability**
110.902.10	**Rules of Interpretation**
110.902.15	**General Definitions**

Section 110.902.00 Purpose. The purpose of this article, Article 902, Definitions, is to promote consistency and precision in the interpretation of the Development Code.

Section 110.902.05 Applicability. The meaning and construction of words and phrases as set forth therein shall apply throughout the Development Code, except where the context of such words and phrases clearly indicates a different meaning or construction. Definitions contained in the adopted version of the International Building Code shall be applicable except when in conflict with definitions contained in the Development Code, in which case the Development Code definitions shall control. Additional definitions which apply only within one article or section may be contained within that article or section.

[Amended by Ord. 1356, provisions eff. 12/21/07.]

Section 110.902.10 Rules of Interpretation. The following general rules of interpretation shall apply to the textual provisions of the Development Code:

(a) Article and Section References. "Article" means an article of the ordinance codified in this Development Code unless some other ordinance is specifically mentioned. "Section" means a section of the ordinance codified in this Development Code unless some other ordinance is specifically mentioned. "Subsection" means a subsection of the section in which the term occurs unless some other section is specifically mentioned.

(b) Definitions. The Director of Community Development shall have the authority to determine the applicable definition source (e.g. Webster's Collegiate Dictionary, International Building Code, International Fire Code, etc.) in the event of a conflict.

(c) Headings. Section and subsection headings contained herein shall not be deemed to govern, limit, modify or in any manner affect the scope, meaning or intent of any provision of this Development Code.

(d) Illustrations. In case of any differences of meaning or implication between the text of any section or article and any illustration, the text shall control.

(e) Gender. The masculine gender includes the feminine and neuter.

(f) Number. The singular number includes the plural, and the plural the singular.

(g) Tense. The present tense includes the past and future tenses, and the future tense includes the present tense.

(h) Oath and Affirmation. "Oath" includes "affirmation."

(i) Shall and May. "Shall" is mandatory and "may" is permissive.

(j) Signature or Subscription and Mark. "Signature" or "subscription" includes "mark" when the signer or subscriber cannot write, such signer's or subscriber's name being written near the mark by a witness who writes his own name near the signer's or subscriber's name; but a signature or subscription by mark can be acknowledged or can serve as a signature or subscription to a sworn statement only when two (2) witnesses so sign their own names thereto.

(k) Statutory References. Whenever reference is made to any portion of the ordinance codified in this Development Code, or of any other ordinance of this County or of any law of this state, the reference applies to all amendments and additions now or hereafter made.

[Amended by Ord. 873, provisions eff. 6/7/93; Ord. 1356, provisions eff. 12/21/07.]

Section 110.902.15 General Definitions. Unless otherwise specified, the following definitions shall be applicable throughout the Development Code:

A-Weighted Sound Level. "A-weighted sound level" means the sound pressure level in decibels as measured on a sound level meter using the A-weighing filter network. Sounds measured with an A-weighted filter are abbreviated dba or db(a).

Accessory Structure. "Accessory structure" means a subordinate structure, the use of which is incidental to that of the main structure or potential main structure, or main dwelling.

Accessway. "Accessway" means vehicular ingress and egress to a property or use.

Adequate Public Facilities Management. "Adequate public facilities management" means a method for ensuring that the infrastructure necessary to support a development project will be available concurrently with the impacts of that development, without causing the level of service provided by said infrastructure to fall below adopted standards.

Affordable Housing. "Affordable housing" means housing which is affordable to low-income households (not exceeding eighty (80) percent of the County median income) or moderate-income households (not exceeding one-hundred twenty (120) percent of County median income).

Agricultural Building. “Agricultural building” is a structure designed and constructed to store farm implements and equipment or hay, grain, poultry, livestock, fruit and other agricultural products. Cold storage warehouses are not agricultural buildings. An agricultural building shall not be used for human habitation; processing, treating, packaging agricultural products; or as a place used by the public. The term shall not include dwellings, but does include greenhouses.

Approved Access. "Approved access" means a way or means of approach to a parcel from either an abutting public road or from a private road, street or right-of-way approved by the County.

Area of Shallow Flooding. "Area of shallow flooding" means a designated AO or AH Zone on the Flood Insurance Rate Maps. The base flood depths range from 1 to 3 feet, a clearly defined

channel does not exist, the path of flooding is unpredictable and indeterminate, and velocity flow may be evident.

Area Plan. "Area plan" means plans adopted by Washoe County which cover specific subareas of the unincorporated County. These plans provide basic information on the natural features, resources and physical constraints that affect the development of the planning area. They also specify detailed land use designations which are then used to review specific development proposals and to plan services and facilities.

Arterial. "Arterial" means a main highway that is a through street.

Attached Accessory Dwelling Unit. "Attached accessory dwelling unit" means a portion of or an addition to a single family main dwelling that has been designed or configured to be used as a separate and independent dwelling unit. An attached accessory dwelling unit includes, at a minimum, permanent kitchen and bathroom (i.e. a toilet) facilities, but may also include living, sleeping, and eating facilities, all separated from the main unit by walls or ceiling and accessed through a lockable exterior or interior door. The attached accessory dwelling unit shall not exceed forty (40) percent of the total square footage of the main dwelling unit or one thousand (1,000) square feet, whichever is smaller. The square footage of garages, crawl spaces, cellars, attics, or basements not designed for human occupancy shall not be included when calculating the total square footage of the main dwelling unit, unless such areas have been legally converted into habitable space. An attached accessory dwelling may be created by converting part of, or adding on to, an existing single family main dwelling. To be considered attached, the accessory dwelling unit must abut (i.e. be on the opposite side of a wall or ceiling) the habitable space of the main dwelling, or the ceiling of a garage attached to the main dwelling. Incidental and accessory features such as trellises, decks, patios, breezeways, or tool sheds will not be considered as establishing an attached structure/dwelling. Attached accessory dwellings are often referred to as guest rooms, guest apartments and "granny flats."

Base Flood Calculation. "Base flood calculation" means a flood having a one (1) percent chance of being equaled or exceeded in any given year. See "Flood, One Hundred (100) Year."

Basement. "Basement" means the portion of a building between floor and ceiling, which is partly below and partly above grade, but so located that the vertical distance from grade to the floor below is less than the vertical distance from grade to ceiling.

Bed and Breakfast Establishment. "Bed and breakfast establishment" means a single-family dwelling containing not more than five (5) guest rooms (no cooking facilities in guest rooms) where, for compensation, meals and lodging are provided.

Berm. "Berm" means a mound or embankment of earth.

Billboard. "Billboard" means an outdoor advertisement making a material or services known, such advertisement being remote from the point of sale of such material or service.

Board. "Board" refers to the Board of County Commissioners of Washoe County.

Boardinghouse. "Boardinghouse" means a building or portion thereof (not a motel) where, for compensation, meals and lodging are provided for more than three (3) guests.

Breezeway. A “breezeway” means a covered walkway, passageway, or corridor that has at least one (1) side entirely or partially open (except for necessary supporting columns), is not intended nor designed as habitable space, and which may or may not be connected to a structure.

Building. "Building" means any structure having a permanent foundation, a roof supported by columns or walls and used for the enclosure of persons, animals or chattels, but not including a trailer (mobile home) or tent.

Building Envelope. "Building envelope" means the area to be occupied by any structure and associated development.

Building Height. "Building height" is the vertical distance above a reference datum measured to the highest point of the coping of a flat roof or to the deck line of a mansard roof or to the average height of the highest gable of a pitched or hipped roof. As illustrated in Figure 110.902.15.BH1, the reference datum shall be selected by either of the following, whichever yields a greater height of building:

(a) The elevation of the highest adjoining sidewalk or ground surface within a five (5) foot horizontal distance of the exterior wall of the building when such sidewalk or ground surface is not more than ten (10) feet above lowest grade.

(b) An elevation ten (10) feet higher than the lowest grade when the sidewalk or ground surface described in Item 1 above is more than ten (10) feet above lowest grade.

The height of a stepped or terraced building is the maximum height of any segment of the building.

Figure 110.902.15.BH1

DETERMINATION OF BUILDING HEIGHT IN FEET

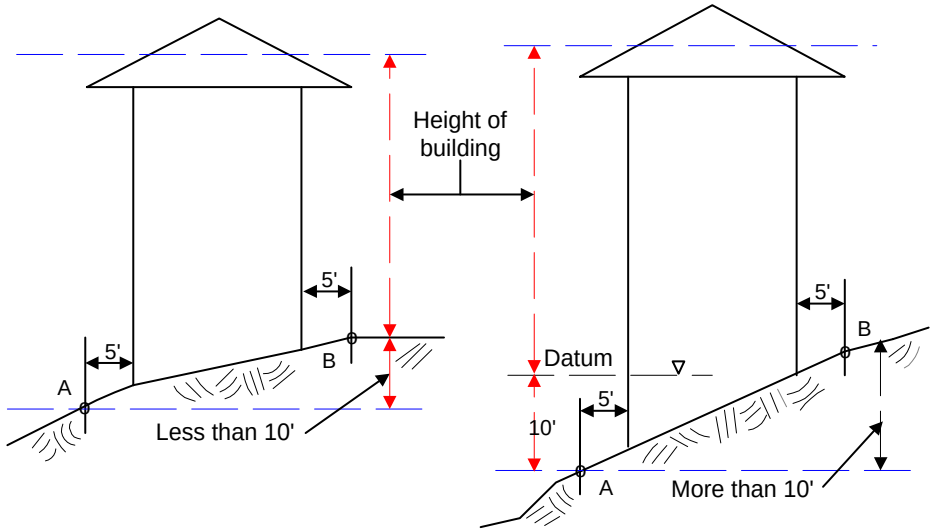

Source: International Building Code Interpretation Manual.

Building Intensity. "Building intensity" refers to the bulk and concentration of physical development of uses permitted in a district. Lot coverage and height are examples of measures of building intensity.

Cellar. "Cellar" means the portion of a building between floor and ceiling which is wholly or partially below grade and so located that vertical distance from grade to the floor below is equal to or greater than the vertical distance from grade to ceiling.

Certificated Water Rights. "Certificated water rights" means the right to put surface water or groundwater to beneficial use that is identified by a record document issued by the Nevada State Engineer after satisfactory proof of "perfection of application" for a permitted water right has been filed in accordance with NRS Chapter 533.

Child Care Institution. “Child care institution” means a facility which provides care and shelter during the day and night and provides developmental guidance to sixteen (16) or more children who do not routinely return to the homes of their parents or guardians. Such an institution may also provide, without limitation:

(a) Education to the children according to a curriculum approved by the Department of Education;

(b) Services to children who have been diagnosed as severely emotionally disturbed as defined in NRS 433B.080, including, without limitation, services relating to mental health and education; or

(c) Emergency shelter to children who have been placed in protective custody pursuant to Chapter 432B of NRS.

Climatic Adaptive Planting Material. "Climatic adaptive planting material" means vegetation which is adapted to the climate or microclimate of the planting site and can flourish given the soil and water environment surrounding its roots. Microclimates, large bodies of water, soil drainage, soil pH, adequate moisture, the presence of soil salts, and both summer and winter wind affect a plant's ability to grow and survive.

Cluster or Clustered Development. See "Common Open Space Development."

Collector. "Collector" means the highest order of residential streets.

Commercial Coach. "Commercial coach" means structure without motive power which is designed and equipped for human occupancy for industrial, professional or commercial purposes.

Commercial Vehicle. “Commercial vehicle” means any vehicle designed, maintained or used for business, commercial, construction or industrial purposes that infringes on the residential character of residential districts; or for the transportation of property in furtherance of commercial enterprise; or having more than two (2) axles on the road; or, any vehicle in excess of eight thousand (8,000) pounds unladen weight. Commercial vehicles includes, but is not limited to: a cement truck, commercial tree-trimming equipment, construction equipment, dump truck, garbage truck, panel truck, semi-tractor, semi-trailer, stake bed truck, step delivery van, tank truck, tar truck, and other vehicles customarily used for commercial purposes.

Commission. "Commission" means the Washoe County Planning Commission.

Common Interest Community. "Common interest community" means real estate in which a person, by virtue of ownership of a unit, is obligated to pay for real estate other than that unit. "Ownership of a unit" does not include holding a leasehold interest of less than twenty (20) years in a unit, including options to renew.

Common Open Space Development. "Common open space development" means a technique whereby minimum lot sizes may be reduced below the regulatory zone requirements for residential and commercial use types, if compensating amounts of open space are provided within the same development (also called "cluster development"). This type of development

allows for structures to be grouped on smaller lots, provided the total density for the development is not exceeded.

Company Town. "Company town" means employee housing and supporting commercial, office, recreational, professional, administrative and other ancillary uses associated with the functioning of an isolated industrial, mining, energy production, utilities, resorts or agricultural based use. This development may occur on a single parcel or multiple parcels.

Consistency. "Consistency" means free from variation or contradiction.

Constraints. "Constraints" mean limitations or actions which cannot be taken or which must be taken.

Construct. "Construct" includes "erect," "reconstruct," "alter," "move in" and "move upon."

Contiguous Parcel of Land. "Contiguous parcel of land" means a parcel of land either abutting directly on the boundary or separated by a street, alley, public right-of-way, creek, river or the right-of-way of a railroad or other public service corporation of another parcel of land.

Corner Lot. See "Lot, Corner."

Cost. "Cost" means the price paid or what is given up in order to acquire, produce, accomplish or maintain anything.

County. "County" refers to the unincorporated area of Washoe County, Nevada.

County Standards. "County standards" means improvement standards set forth in this Development Code or adopted by the Board of County Commissioners.

Cross-Section. "Cross-section" is a drawing or photograph showing a cutting through something, especially at right angles to its axis. A cross section of a roadway usually indicates the width of the street, the number of lanes, and the width of any median, parkways, sidewalks and bicycle lanes.

Cumulative Impact. "Cumulative impact" means an effect which is a result of several related projects. Each increment from each project may not be noticeable but cumulative impacts may be noticeable when all increments are considered.

Cut. "Cut" means shaping of the land surface by removing soil, rock or other materials.

Decibel. "Decibel" means a unit for describing the amplitude of sound, equal to twenty (20) times the logarithm to the base ten (10) of the ratio of the pressure of the sound measured to the reference pressure, which is twenty (20) micropascals (20 micronewtons per square meter).

Density or Residential Density. "Density" or "residential density" means the number of dwelling units per gross acre for residential uses.

Density Bonus. "Density bonus" means an increase in residential density over and above the density specified in the Development Code. A "density bonus unit" is one of the additional housing units built as a result of granting a density bonus.

Destination Resort. "Destination resort" is a self-contained development that provides for visitor-oriented accommodations and developed recreational facilities in a setting with high natural amenities. Visitor-oriented accommodations are overnight lodging and facilities designed for

visitors, not permanent residents, and overnight lodging excludes RV and mobile home parks. Visitor accommodations must include meeting rooms and restaurants.

Detached Accessory Dwelling Unit. "Detached accessory dwelling unit" means a dwelling unit on the same lot as the main dwelling unit, but which is physically separated from the main dwelling unit. A detached accessory dwelling unit is designed and configured to provide independent living facilities for one or more persons, and includes, at a minimum, permanent kitchen and bathroom (i.e. toilet) facilities, but which may also include living, sleeping, and eating facilities. Except in the Medium Density Suburban (MDS) Regulatory Zone, a detached accessory dwelling unit shall not exceed fifteen hundred (1,500) square feet or fifty (50) percent of the total square footage of the main unit, whichever is smaller. In the Medium Density Suburban (MDS) Regulatory Zone, the detached accessory dwelling unit shall not exceed eight hundred (800) square feet or fifty (50) percent of the total square footage of the main dwelling unit, whichever is smaller. The square footage of garages, crawl spaces, cellars, attics, or basements not designed for human occupancy shall not be included when calculating the total square footage of the main dwelling unit, unless such areas have been legally converted into habitable space. Detached accessory dwelling unit are also commonly referred to as guest houses, second units, detached "granny flats" and caretaker's quarters.

Detached Accessory Structure. “Detached accessory structure” means a building or structure on the same lot as the main residential structure and devoted to a use incidental to that main residential structure. A detached accessory structure is not designed, configured, or used for human habitation. The detached accessory structure may be connected to water and wastewater systems subject to the recordation of a deed restriction prohibiting the use of the structure as a dwelling unit. Installation of both a kitchen and a toilet in a detached accessory structure shall render the structure as a dwelling unit and subject to the accessory dwelling unit provisions contained in Article 306, Accessory Uses and Structures. Typical uses include storage buildings, sheds, barns, and detached garages.

Development. "Development" means any man-made change to improved or unimproved real estate including the construction of buildings or other structures, mining, dredging, filling, grading, paving, excavation, drilling operations or storage of equipment or materials.

Development Agreement. "Development agreement" means an agreement entered into by Washoe County and any person having a legal or equitable interest in land concerning the development of that land, pursuant to NRS Chapter 278.

Development Code. "Development Code" refers to Chapter 110 of the Washoe County Code which incorporates all County development-related ordinances and standards to ensure conformity with the Master Plan.

Division into Large Parcels. "Division into large parcels" means division of land if each proposed lot is at least forty (40) acres in area including roads and easements or at least one-sixteenth (1/16) of a section as described by a government land office.

Dog Training Center. “Dog training center” means a facility where dogs are boarded and trained for a long-term period of time.

Dog Training Services. “Dog training services” means the training of dogs with their owners or owners’ designee, where both owner and dog participate in dog training.

Domestic Water. "Domestic water" means water supplied to individual dwellings and other land uses which is suitable for drinking.

Dormitory/Bunkhouse. "Dormitory/bunkhouse" means a building or a portion of a building where, for compensation or a benefit of employment, meals and lodging are provided.

Drainage, Natural. "Natural drainage" means any channel, swale or depression which conducts water as part of the natural drainage pattern of a site.

Driveway, Residential. "Residential driveway" means a private paved or unpaved area used for ingress or egress of vehicles, and allowing access extending from a property line to a building or other structure or facility on the subject parcel.

Dwelling. "Dwelling" means any building or portion thereof used exclusively for residential purposes but does not include hotels, clubs, boardinghouses or rooming houses, fraternity or sorority houses, or institutions.

Dwelling Unit. "Dwelling unit" means any building or portion thereof, including a fabricated home or portion thereof, which contains at a minimum permanent kitchen and bathroom (i.e. a toilet) facilities, but which may also include living, sleeping, and eating facilities as required by the Development Code, the International Building Code, and/or the National Manufactured Home and Safety Standards Act.

Electronic Notice. "Electronic notice" means any notice required by law that is transmitted via electronic means and which provides a method of verifying receipt to the sender that the receiver has received the notice. Electronic includes, but is not limited to, e-mail, facsimile transmission that identify the receiver and have a time and date stamp.

Endangered Species. "Endangered species" means any species listed as such in the Federal Register which is in danger of extinction throughout all or a significant portion of its range.

Engineer. "Engineer" means a Nevada registered engineer pursuant to NRS Chapter 625.

Ephemeral Stream. “Ephemeral stream” means a stream that flows only in direct response to precipitation, and thus discontinues its flow during dry seasons. Such flow is usually of short duration. Most of the dry washes of more arid regions may be classified as ephemeral streams.

Erosion. "Erosion" means the detachment and movement of soil from the land surface by wind, water or gravity.

Fabricated Home. "Fabricated home" means a dwelling unit fabricated in an off-site manufacturing facility for installation or assembly at the building site. Fabricated homes include modular homes, manufactured homes and mobile homes. The term “fabricated home” does not include a “recreational vehicle.”

Facility for Transitional Living for Released Offenders. “Facility for transitional living for released offenders” means a residence that provides housing and a living environment for persons who have been released from prison and who require assistance with reintegration into the community, other than such a residence that is operated or maintained by a state or local government or an agency thereof. The term does not include a halfway house for recovering alcohol and drug abusers or a facility for the treatment of abuse of alcohol or drugs. As used in this section, person who has been released from prison means:

(a) A parolee.

(b) A person who is participating in:

(1) A judicial program pursuant to NRS 209.4886 or 213.625; or

(2) A correctional program pursuant to NRS 209.4888 or 213.371.

(c) A person who is supervised by the Division of Parole and Probation of the Department of Public Safety through residential confinement.

(d) A person who has been released from prison by expiration of his or her term of sentence.

Family. "Family" means one (1) or more persons related by blood, marriage or legal adoption, or a group of six (6) or fewer unrelated persons and two additional persons who act as house parents or guardians, living together in a dwelling unit.

Fence. "Fence" means a wall or barrier constructed of boards, masonry, wire or any other material for the purpose of enclosing space or separating parcels of land. The term "fence" does not include retaining walls, but does include fence gates and gateposts.

Fill. "Fill" means shaping of the land surface by depositing soil, rock or other materials.

Final Map. "Final map" means the map or recording instrument for subdivisions of land as described in Article 610. A final map may also be used to record an approved parcel map at the option of either the subdivider or the County.

Fire Management. "Fire management" means activities required for the protection of resources and values from fire, or the use of fire to meet land management goals and objectives.

Flood or Flooding. "Flood" or "flooding" means a general and temporary condition of partial or complete inundation of normally dry land areas from the overflow of inland waters; or the unusual and rapid accumulation of runoff of surface waters from any source.

Flood, One Hundred (100) Year. "One hundred (100) year flood" also called the “base flood” means a flood having a one (1) percent chance of being equaled or exceeded in any given year. The boundaries of the one hundred (100) year flood include both the floodway and the flood fringe areas as shown on the Federal Emergency Management Agency (FEMA) Flood Insurance Rate Maps.

Flood Boundary and Floodway Maps (Floodway). "Flood Boundary and Floodway Maps" means the official maps on which the Federal Insurance Administration has delineated both the areas of flood hazard and the floodway.

Flood Elevation. "Flood elevation" means the elevation of the water surface of the base flood based on the National Geodetic Vertical Datum (NGVD) of 1929.

Flood Elevation, Increase In. "Increase in flood elevation" means an increase in flood elevation of more than one (1) foot at any point.

Flood Fringe. "Flood fringe" means the area of the one hundred (100) year flood, exclusive of the floodway, as shown on the Flood Insurance Rate Maps, and any area determined by the Floodplain Administrator to have a one (1) percent or greater probability of flood in a given year.

Flood Hazard Areas. "Flood hazard areas" means the area designated by the Federal Emergency Management Agency as being flooded by the base flood, and is designated as "Zone A, AO, AH, AE and A99" on the Flood Insurance Rate Maps.

Flood Height. "Flood height" means the depth of the floodwater during the one hundred (100) year flood, computed as the difference between the elevation of the one hundred (100) year floodwater surface and the elevation ground surface at a given point in the flooded area.

Flood Insurance Rate Maps (FIRM). "Flood Insurance Rate Maps" means the official maps on which the Federal Insurance Administration has delineated the flood hazard area, the limited flooding area and the risk premium zones applicable to the community.

Flood Insurance Study (FIS). "Flood Insurance Study" means the official report provided by the Federal Emergency Management Agency that includes flood profiles, the Flood Insurance Rate Maps, the Flood Boundary and Floodway Maps, and the water surface elevation of the base flood.

Floodplain. "Floodplain" means any land area susceptible to being inundated by water from any source.

Floodplain Administrator. "Floodplain Administrator" means the person appointed to administer and implement the provisions of Article 416 of this Development Code.

Floodplain Management. "Floodplain management" means the operation of an overall program of corrective and preventive measures for reducing flood damage.

Floodproofing. "Floodproofing" means any combination of structural and nonstructural additions, changes or adjustments to structures which reduce or eliminate flood damage to real estate or improved property, water and sanitary facilities, structures and their contents.

Floodway. "Floodway" means the channel of a river or other watercourse and the adjacent land areas that must be reserved in order to discharge the base flood without cumulatively increasing the water surface elevation more than one (1) foot. The floodway is delineated on the Flood Boundary and Floodway Maps.

Floor Area Ratio (FAR). "Floor area ratio" means the ratio of floor area permitted on a lot to the size of the lot. For example, a permitted FAR of 6.0 on a 10,000 square foot lot would allow a building with a total floor area of 60,000 square feet.

Front Line. "Front line" means the narrowest lot dimension fronting on a street.

Front Yards. See "Yard, Front."

Fuel Management. "Fuel management" means treating or controlling any vegetative material which adversely affects meeting fire management direction based upon resource management goals and objectives.

Fuelbreak. "Fuelbreak" means a strip of land, strategically placed for fighting anticipated fires, where hazardous fuels have been replaced with less burnable fuels (like grass). They divide fire-prone areas into smaller parcels for easier fire control and provide access for fire fighting.

Fuels. "Fuels" mean any material capable of sustaining or carrying a wildfire, usually natural material both live and dead.

Gaming. "Gaming" means any legally constituted gambling enterprise authorized under the laws of the State of Nevada other than slot machines when such machines are operated incidentally to the conduct of a licensed retail business.

Geothermal Resource. "Geothermal resource" means the natural heat of the earth and the energy associated with the natural heat, pressure and all dissolved or entrained minerals, but excluding hydrocarbons and helium, that may be obtained from the medium used to transfer that heat.

Governing Body. "Governing body" refers to the Washoe County Board of County Commissioners, unless otherwise clearly indicated.

Government Patent Easement. "Government patent easement" means an easement granted through a patent by the federal government for a public purpose, generally for public access and utility purposes.

Grade. "Grade" is the lowest point of elevation of the finished surface of the ground, paving or sidewalk within the area between the building and the property line or, when the property line is more than 5 feet from the building, between the building and a line 5 feet from the building.

Gradient. "Gradient" is the slope of a lot measured as the difference in elevation of finished grade between the midpoint of the front property line and the farthest opposite point of the lot depth.

Grading. "Grading" means removal of trees and shrubs with surface soil grading for smoothness.

Greenbelt. "Greenbelt" means an area where measures such as fuel management, land use planning and development standards are applied to mitigate fire, flood and erosion hazard. More traditionally, an irrigated landscaped buffer zone between development and wildlands, usually put to additional uses (e.g. golf course, park, etc.).

Gross Density. "Gross density" is the ratio of the total number of units to the total site area.

Ground Cover. "Ground cover" means low, dense-growing plants such as shrubs or vines, or inert materials such as rock or bark used to cover bare ground.

Ground Water Recharge. "Ground water recharge" means the infiltration of water into the earth. It may increase the total amount of water stored underground or only replenish the groundwater supply depleted through pumping or natural discharge. The natural or intentional infiltration of surface water into the Zone of Saturation (i.e. into the Ground Water). Also, the inflow of water to a ground water reservoir (Zone of Saturation) from the surface. Infiltration of precipitation and its movement to the water table is one form of natural recharge.

Group Foster Home. "Group foster home" means a natural person, partnership, firm, corporation or association who provides full-time care for seven (7) to fifteen (15) children who are:

(a) Under eighteen (18) years of age;

(b) Not related within the first degree of consanguinity or affinity to any natural person maintaining or operating the home; and received, cared for, and

(c) Maintained for compensation or otherwise, including the provision of permanent free care.

Halfway House for Recovering Alcohol and Drug Abusers. "Halfway house for recovering alcohol and drug abusers" means a residence that provides housing and a living environment for recovering alcohol and drug abusers and is operated to facilitate their reintegration into the

community, but does not provide any treatment for alcohol or drug abuse. The term does not include a facility for transitional living for released offenders.

Hallway. “Hallway” means a completely enclosed corridor, passageway, or other similar enclosed space that connects two (2) separate rooms, or ingress and egress points, and which is not intended nor designed as habitable space. A hallway shall not be used to connect two (2) separate dwelling units.

Hedge. "Hedge" means a dense row of plant material, such as shrubs, which are arranged to form a boundary or screen.

Highest Existing Grade. "Highest existing grade" means the highest natural elevation of the ground surface prior to construction next to the proposed walls of a structure.

Hillside Development. "Hillside development" means any development including individual lots which has slopes greater than fifteen (15) percent on twenty (20) percent or more of the site.

Historic Structure. “Historic structure” means any structure that is:

(a) Listed individually in the National Register of Historic Places (a listing maintained by the Department of the Interior) or preliminarily determined by the Secretary of the Interior as meeting the requirements for individual listing on the National Register;

(b) Certified or preliminarily determined by the Secretary of the Interior as contributing to the historic significance of a registered historic district or a district preliminarily determined by the Secretary of the Interior to qualify as a registered historic district;

(c) Individually listed on a state inventory of historic places in states with historic preservation programs which have been approved by the Secretary of the Interior; or

(d) Individually listed on a local inventory of historic places in communities with historic preservation programs that have been certified either:

(1) By an approved state program as determined by the Secretary of the Interior; or

(2) Directly by the Secretary of the Interior in states without approved programs.

Home for Individual Residential Care. “Home for individual residential care” means a home in which a natural person furnishes food, shelter, assistance and limited supervision, for compensation, to not more than two (2) persons with mental retardation or with disabilities or who are aged or infirm, unless the persons receiving those services are related within the third degree of consanguinity or affinity to the person providing those services. The term does not include:

(a) A halfway house for recovering alcohol and drug abusers; or

(b) A home in which supported living arrangement services are provided to assist individuals in maximizing his independence, including without limitation training and habitation services.

Hotel. "Hotel" means a building occupied or intended to be occupied, for compensation, as the temporary residence for transient guests, primarily persons who have residence elsewhere, with an interior hall and lobby.

House Construction Factory. "House construction factory" means a building used for the construction of a single or multiple family dwelling, or the assembly of prefabricated single or multiple family dwelling components, or a combination of the above-described procedures, which results in a completed single or multiple family dwelling that can be transported to a lot for which service has been provided and which has been improved to accommodate the installation of the dwelling.

Household. "Household" means the person or persons occupying a housing unit.

Impervious Surface. "Impervious surface" means the surface through which water cannot penetrate, such as a roof, road, sidewalk or paved parking area.

Incorporated City. "Incorporated city" means a city incorporated under the laws of the State of Nevada.

Infrastructure. "Infrastructure" means the basic facilities such as roads, schools, power plants, transmission lines, transportation and communication systems on which the continuance and growth of a community depends.

Inoperable Vehicle. “Inoperable vehicle” means a vehicle, as defined by NRS 482.135, which:

(a) Does not display current license plates (from any state) registered to the vehicle; and,

(b) Is visibly damaged, wrecked, dismantled, in serious disrepair, deteriorating (rusting, rotting) or missing major components, or is being salvaged, parted out, prepared for crushing, shredding or scrapping; and,

(c) Is not awaiting disposition instructions as a result of a collision.

Interior Lot. See " Lot, Interior."

Junkyard. "Junkyard" means any space for storage, abandonment or sale of junk, scrap material or similar waste, including the dismantling, demolition or abandonment of automobiles, other vehicles, machinery or parts. Junkyard shall be synonymous with salvage yard.

Kitchen. "Kitchen" means a room or space within a room equipped with such electrical or gas hook up that would enable the installation of a range, oven, or like appliance using 220/40 volts or natural gas (or similar fuels, such as propane) for the preparation of food, and also containing either or both a refrigerator and sink for the washing and/or disposal of food.

Landscaped Buffer. "Landscaped buffer" means an area of landscaping which separates two (2) distinct land uses, or a land use and a public right-of-way, and which acts to soften or mitigate the effects of one (1) land use on the other.

Landscaping. "Landscaping" means an area devoted to and maintained with a mixture of existing or new native or exotic plants such as turf, groundcover, shrubs, flowers, vines and trees, as well as additional complementary decorative features such as rocks, decorative pavement, fountains, pools, sculpture and decorative wall.

Ldn. "Ldn" means the average equivalent A-weighted sound level during a 24-hour day obtained by adding ten decibels to the hourly noise levels measured during the night (10:00 p.m. to 7:00 a.m.). In this way, Ldn takes into account the lower tolerance of people for noise during nighttime periods. Ldn noise level measurements are typically plotted onto a map to identify noise contours around a significant noise generator (e.g. freeways, airports, etc.).

Limited Gaming. "Limited gaming" means gaming enterprises authorized by the State Gaming Control Board whereby any person or gaming establishment may be issued a limited gaming license or have such conditions placed on a gaming license as necessary to protect the public interest.

Livestock. "Livestock" means:

(a) All cattle or animals of the bovine species;

(b) All horses, mules, burros and asses or animals of the equine species;

(c) All goats or animals of the caprine species;

(d) All swine or animals of the porcine species; and

(e) All sheep or animals of the ovine species.

Loading Space. "Loading space" means an off-street space or berth on the same lot with a building or contiguous to a group of buildings for the temporary parking of vehicles while handling merchandise or materials.

Lot. "Lot" means a distinct part or parcel of land divided with the intent to transfer ownership or for building purposes and which abuts upon a permanent means of access.

Lot, Corner. "Corner lot" means a lot situated at the intersection of two (2) or more streets or a lot that abuts one (1) street that changes directions, curves or turns around the lot with an interior angle of 135 degrees or less.

Lot, Interior. "Interior lot" means either (a) a lot bounded by a street on only one (1) side; or, (b) a lot situated at the intersection of (2) streets having an interior angle of one hundred thirty-five (135) degrees or more; or, (c) a lot that has continuous street frontage on only one (1) street and when the curvature of the lot along the street frontage exceeds one hundred thirty-five (135) degrees or more.

Lot, Through. "Through lot" means a lot bounded by two (2) streets that do not intersect at the boundaries of the lot.

Lot Coverage. "Lot coverage" is a measure of intensity of land use which represents the portion of a site that is impervious (i.e. does not absorb water). This portion includes, but is not limited to, all areas covered by buildings, parking structures, driveways, roads, sidewalks, and any areas of concrete asphalt. In the case of lumberyards, areas where lumber is stored also constitutes impervious surfaces.

Lot Depth. "Lot depth" is the distance between the front and rear lot lines measured in the mean direction of the side lines.

Lot Size. "Lot size" is the total square footage of a lot.

Lot Width. "Lot width" may be determined in one of the following three ways:

(a) The distance between the side lot lines measured at right angles to the lot depth at a point midway between the front and rear line (see Figure 110.902.15LW1);

Figure 110.902.15.LW1

DISTANCE BETWEEN SIDE LOT LINES

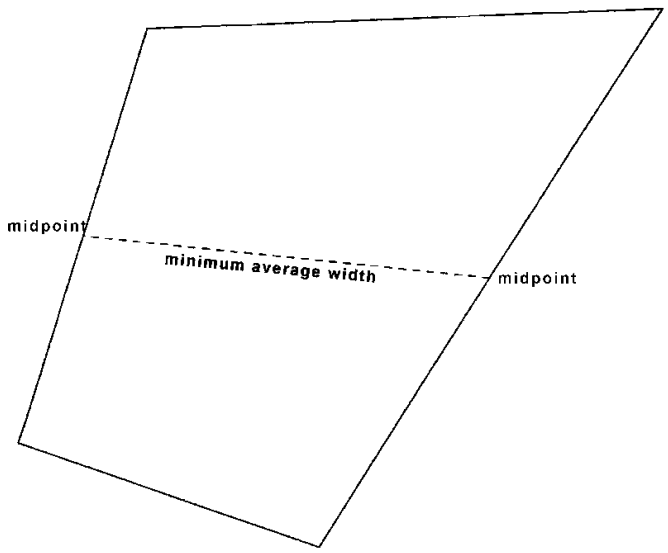

Source: George Lindesmith, PLS.

(b) The distance between the midpoints of the side lot lines (see Figure 110.902.15LW2); or

Figure 110.902.15.LW2

DISTANCE BETWEEN MIDPOINTS

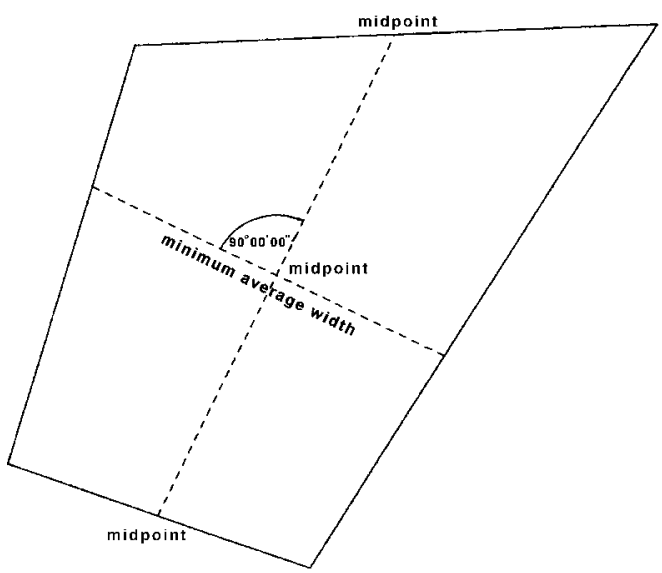

Source: George Lindesmith, PLS.

(c) Area/Average Depth = Average Width (see Figure 110.902.15LW3).

Figure 110.902.15.LW3

AREA/AVERAGE WIDTH

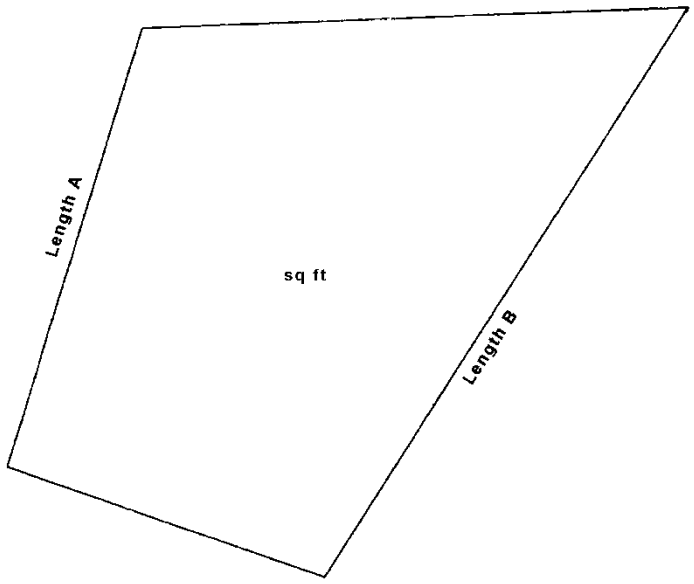

Area/Average Depth = Average Width

$$\text{Area Sq Ft} / \frac{\text{Length A + Length B}}{2} = \text{Average Width}$$

Source: George Lindesmith, PLS.

Lowest Floor. "Lowest floor" means the lowest floor of the lowest enclosed area (including basement). An unfinished or flood resistant enclosure, usable solely for parking of vehicles, building access or storage, in an area other than a basement area is not considered a building's lowest floor, provided that such enclosure is not built so as to render the structure in violation of the applicable non-elevation design requirements.

Main Building. "Main building" means a building devoted to the principal use of the lot on which it is situated.

Major Subdivision. "Major subdivision" means a subdivision which contains five (5) or more lots, parcels, sites, units, plots or interests.

Manufactured Home. "Manufactured home" is a dwelling unit fabricated in an off-site manufacturing facility for installation or assembly at the building site, bearing the label certifying that it is built in compliance with the Federal Manufactured Housing Construction and Safety Standards in effect on the date of manufacture. A manufactured home is further defined by Nevada Revised Statute (NRS 489.113). A manufactured home is not a mobile home, nor a modular home.

Manufactured Home Park Site. "Manufactured home park site" is the entire tract of land used for a manufactured home park.

Manufactured Home Space. "Manufactured home space" is the area in a manufactured home park that is rented or leased to the occupant or occupants of a manufactured home.

Manufactured Home Subdivision. "Manufactured home subdivision" is a subdivision designed and/or intended for the sale of lots for siting manufactured homes.

Master Plan. “Master Plan” means the Washoe County Master Plan including both countywide elements and area plans, and a number of more detailed plans and studies related to the plans.

Median Income or County Median Income. "Median income" or "County median income" means the level of income in Washoe County whereby one-half (1/2) of the population earns greater than that level of income and one-half (1/2) of the population earns less than that level of income. Median income is determined on a yearly basis by the Department of Housing and Urban Development.

Military Installation. “Military installation” means a base or facility at which or from which the Air Force, Army, Coast Guard, Marine Corps, Navy, Air Force Reserve, Army Reserve, Coast Guard Reserve, Marine Corps Reserve, Navy Reserve or National Guard conducts exercises, maneuvers, operations, patrols or training.

Minor Subdivision. "Minor subdivision" means a subdivision which contains four (4) or less lots, parcels, sites, units, plots or interests.

Minute Action. "Minute action" means an official final decision made by the Board of County Commissioners, as recorded in the County Clerk's minutes.

Mobile Home. "Mobile home" is a transportable, fabricated home, designed to be used as a year-round residential dwelling and built prior to enactment of the Federal Manufactured Housing Construction and Safety Standards Act of 1974, which became effective June 15, 1976. A mobile home, further defined by Nevada Revised Statute (NRS 489.120), does not bear an insignia of approval that the dwelling unit was built in compliance with NRS Chapter 461. A mobile home is not a manufactured home, nor a modular home.

Mobile Home Park. "Mobile home park" means a tract of land under single ownership within which two (2) or more manufactured homes are occupied as residences on a permanent or semi-permanent basis. The homes are located on spaces that are rented or leased. Special facilities for the common use of the occupants may be included.

Mobile Home Park Site. "Mobile home park site" is the entire tract of land used for a mobile home park.

Modular Home. "Modular home" is a dwelling unit fabricated in an off-site manufacturing facility for installation or assembly at the building site, bearing a label certifying that it is built in compliance with local International Building Code standards and further meets all requirements of County Code Chapter 100. Modular homes shall be subject to the same permit process as site-built homes. A modular home is not a manufactured home, but includes what is commonly referred to as a panelized home.

Motel. "Motel" means a building occupied or intended to be occupied, for compensation, as the temporary residence for transient guests, primarily persons who have residence elsewhere, with access to each room or unit from an outside porch or landing (whether or not such outside porch or landing is enclosed with screen, glass, plastic or similar material).

Mulch. "Mulch" means an organic or inorganic material applied to landscaped areas to help minimize evaporation from the soil, reduce weeds, moderate soil temperatures and slow erosion.

National Register of Historic Places. "National Register of Historic Places" means the listing maintained by the U.S. National Park Service of areas which have been designated as historically significant. The Register includes places of local and state significance, as well as those of value to the nation in general.

Natural Area. "Natural area" means a land area which is unimproved and not occupied by any structures or man-made elements, and set aside for the conservation of permanent, undisturbed open space.

Net Density. "Net density" is the ratio of the total number of units to the site area minus the area of the streets, parking areas and undevelopable land.

Nevada Natural Heritage Site. "Nevada Natural Heritage Site" means areas of land or water which either:

(a) Have unusual flora, fauna, geological, scenic or similar features of scientific, educational or recreational interest; or

(b) Retain some degree, or have re-established, a natural character (although it need not be completely undisturbed).

Non-municipal Air Strips and Glider Ports. "Non-municipal air strips and glider ports" means any Federal Aviation Administration (FAA) recognized public use landing area, privately owned and operated for scheduled or non-scheduled air transportation activities, where commercial uses and aviation related commerce can occur. Such use may include provision of landing privileges, hangar and tie-down lease/rental spaces, fuel and lubrication service, flight instruction, plane rental, mechanical repairs, or any other form of aviation commerce. Uses can also include scenic and sightseeing transportation service including helicopter rides, glider plane rides, air balloon rides, ultra-light and experimental aircraft activities and aircraft charters. The term “non-municipal air strips and glider ports” does not apply to public airports operated by any federal, state or local government agencies. The term also does not apply to a personal landing field that is used for fixed-wing aircraft or helicopter landing operations that are incidental and ancillary to established allowable uses including, but not limited to, agricultural, ranching or mining activities, as long as no aviation related commerce is conducted at the personal landing fields.

NRS. "NRS" means Nevada Revised Statutes.

Open Space, Common. "Common open space" means the total land area, not individually owned or dedicated for public use, which is designed and intended for the common use or enjoyment of the residents or occupants of the development. Common open space includes swimming pools, putting greens and other recreational-leisure facilities; areas of scenic or natural beauty and habitat areas; hiking, riding or off-street bicycle trails; and landscaped areas adjacent to roads which are in excess of minimum required rights-of-way.

Open Space, Private. "Private open space" means the outdoor living area directly adjoining a dwelling unit or building which is intended for the private enjoyment of the residents or occupants of the dwelling unit or building and which is defined in such a manner that its boundaries are evident.

Open Space Use. "Open space use" means the current employment of land, the preservation of which use would conserve and enhance natural or scenic resources, protect streams and water supplies or preserve sites designated as historic pursuant to law, provided such land has a greater value for another use than for open space use.

Outdoor Storage. “Outdoor Storage” means the outside placement of items and materials that are incidental to the existing principal use of the property, except as provided for under Section 110.306.35(d), for a period of more than seventy-two (72) consecutive hours. Outdoor storage is further defined and regulated in the Washoe County Nuisance Code (WCC Sections 50.300 to 50.310, inclusive).

Parcel Map. "Parcel map" means a map for a minor subdivision.

Parcel of Land. "Parcel of land" means any unit or contiguous units of land in the possession of or recorded as the property of one person.

Parking Area. "Parking area" means an open area, excluding a street or other public right-of-way, used for the parking of vehicles and available to the public, whether for free or for compensation.

Permanent Employee Housing. "Permanent employee housing" means housing for employees of an isolated industrial, mining, railroad, highway, utilities or agricultural based use where those employees occupy the housing on a permanent basis year round. This development may occur on a single parcel or multiple parcels.

Permitted Water Rights. "Permitted water rights" means the right, in accordance with NRS Chapter 533 and as approved by the Nevada State Engineer, to appropriate public waters, or to change the place of diversion, manner of use or place of use of water already appropriated.

Perennial Stream. “Perennial stream” means a stream that flows from source to mouth throughout the year. This definition does not apply to a man-made watercourse constructed for irrigation, aesthetic or other purposes.

Person. "Person" means a firm, association, corporation, partnership or an individual.

Personal Landing Field. “Personal landing field” means a private use aviation landing area that is used for fixed-wing aircraft or helicopter landing operations that are incidental and ancillary to established allowable land uses including, but not limited to, agricultural, ranching or mining activities, as long as no aviation related commerce is conducted at the personal landing fields. Personal landing fields do not engage in scheduled or non-scheduled air transportation activities, or in any scenic and sightseeing transportation service, or any other form of aviation commerce. The term “personal landing field” does not apply to “non-municipal air strips and glider ports,” or to public airports operated by any federal, state or local government agencies.

Placement. "Placement" means the issuance of a set-up permit by the Building and Safety Department for a manufactured home or mobile home.

Planting Area. "Planting area" means an area devoted to or maintained predominantly with native or exotic plants including turf, groundcover, shrubs, flowers, vines and trees with a limited portion of complementary decorative features.

Plumbing Fixture. A “plumbing fixture” is a receptacle, device, or appliance that is supplied with water or which receives liquid or liquid-borne wastes, and which discharges into a drainage system to which it may be directly or indirectly connected.

Police Powers. "Police powers" means powers reserved to the states by the U.S. Constitution and delegated to cities and counties through the Nevada Constitution and the Nevada Revised Statutes; it is the authority to create and enforce ordinances and regulations that are not in conflict with general laws in order to promote the health, safety and general welfare of the public.

Print. "Print" means and includes a blueprint, photostat, direct process print or other copy which reproduces exactly the original drawing from which it was made.

Private Communication Antenna. "Private communication antenna" means any system of wires or poles or similar devices, excluding satellite dish antennas, used for the transmission or reception of electromagnetic waves by federally licensed amateur radio or citizen band radio operators, which system is external to or attached to the exterior of any building.

Private Garage. "Private garage" means a space intended for or used by the private automobiles of families resident upon the lot.

Public Garage. "Public garage" means a building for the repair, storage or hire of motor vehicles.

Rear Line. "Rear line" means the lot line most directly opposite the front line. A parcel of land may have only one (1) rear line.

Rear Yard. See "Yard, Rear."

Recreational Vehicle. "Recreational vehicle" means a vehicular structure that is primarily designed as temporary living quarters for travel, recreation and camping uses. A recreational vehicle can be self-propelled, mounted on, or towed by a separate vehicle.

Recreational Vehicle Park. "Recreational vehicle park" means a tract of land for the transient use by two or more recreational vehicles.

Regional Plan. "Regional Plan" means the Truckee Meadows Regional Plan.

Required Area. "Required area" means the minimum area of a lot or parcel necessary to permit its use under the provisions of the Development Code. Required area refers to:

(a) Any lot shown as part of a subdivision recorded as a final plat in the manner provided by law;

(b) Any parcel of land separated as a lot prior to the adoption and effective date of the original Washoe County Land Use Ordinance or the adoption of additional regulatory zones; or

(c) Any lot or parcel of land which has an area not less than that required in the respective regulatory zone.

Residential Facility for Groups. “Residential facility for groups” means an establishment that furnishes food, shelter, assistance and limited supervision to a person with mental retardation or with a disability or a person who is aged or infirm. The term includes, without limitation, an assisted living facility. The term does not include:

(a) An establishment which provides care only during the day;

(b) A natural person who provides care for no more than two (2) persons in his or her own home;

(c) A natural person who provides care for one (1) or more persons related to him or her within the third degree of consanguinity or affinity;

(d) A halfway house for recovering alcohol and drug abusers; or

(e) A facility funded by a division or program of the Department of Health and Human Services.

Revegetation. "Revegetation" means stabilizing disturbed or graded soils after construction by replanting with indigenous or natural appearing plants.

Ridgeline. "Ridgeline" means the topmost line connecting the series of highest elevation points of a ridge, running center and parallel to the long axis of the ridge and from which all water drains down.

Ridgeline, Significant. "Significant ridgeline" means the topmost line connecting the series of highest elevation points of a ridge, as identified on the Development Suitability map for each planning area included in Volume Two: Area Plans of the Washoe County Master Plan.

Right-of-Way. "Right-of-way" is a strip of land occupied or intended to be occupied by a publicly dedicated street, including the pavement, sidewalks and parkways, crosswalk, railroad, electric transmission line, oil or gas pipeline, water main, sanitary or storm sewer main, shade streets or other special use.

Riparian. "Riparian" means related to or located on the bank of a natural water course.

Riparian Habitat. "Riparian habitat" means the land and plants bordering a watercourse or lake.

Room. "Room" is space in a structure for living, sleeping, eating or cooking. Bathrooms, toilet compartments, closets, halls, storage or utility space, and similar areas, are not considered habitable space and therefore, not a room.

Roominghouse. "Roominghouse" means a building or portion thereof (not a motel) where, for compensation, lodging is provided for more than three (3) guests.

Runoff. "Runoff" means that part of precipitation which flows over the land without filtering into the soil.

Rural Regulatory Zones. "Rural regulatory zones" means the Low Density Rural Regulatory Zone, Medium Density Rural Regulatory Zone, and High Density Rural Regulatory Zone.

Satellite Dish Antenna. "Satellite dish antenna" means a devise incorporating a reflective surface that is solid, open mesh or bar configured and is in the shape of a shallow dish, cone, horn or cornucopia. Such device shall be used to transmit and/or receive radio or electromagnetic waves between terrestrially and/or orbitally based uses. This definition is meant to include, but not be limited to, what are commonly referred to as satellite earth stations, TVROs (television reception only satellite dish antennas), and satellite microwave antennas.

Scenic Corridor. "Scenic corridor" means a roadway with recognized high quality visual amenities that include background vistas of mountains, open country or city.

School. "School" means an institution of learning which offers instructions in the several branches of learning required to be taught in the public schools of the State of Nevada.

Screen. "Screen" means to provide physical separation and complete visual obscuration of one area from another on all sides and in all seasons. Such separation must be at least six (6) feet high and includes, but is not limited to, the combination or individual use of a fence, decorative wall, structure, earth berm or dense landscaping.

Section 404 (Clean Water Act). “Section 404 (Clean Water Act)” means that section of the Clean Water Act delineating restrictions on the dredging and filling (only) of Wetlands in the United States. While Section 404 Permits are issued by the U.S. Army Corps of Engineers (COE), Section 404 regulations are written by the U.S. Environmental Protection Agency (EPA).

Section 404 (Clean Water Act) Permit. “Section 404 (Clean Water Act) Permit” means the Wetland dredge and fill permit issued under regulations written to conform to Section 404 of the Clean Water Act. The permit is actually granted by the U.S. Army Corps of Engineers (COE).

Sedimentation. “Sedimentation” means the act or process of depositing sediment from suspension in water. All the processes whereby particles of rock material are accumulated to form sedimentary deposits. Sedimentation, as commonly used, involves not only aqueous but also glacial, aeolian, and organic agents. (Water Quality) Letting solids settle out of wastewater by gravity during treatment.

Service Standards. "Service standards" means a measurement of municipal services used to monitor or compare services provided by the County and other service providers.

Setback. "Setback" means the required distance between every structure and the lot line of the lot on which the structure(s) is located.

Shrubs. "Shrubs" means a self-supporting woody species of plants characterized by persistent stems and branches springing from the base.

Side Yard. See "Yard, Side."

Site-Built Home. "Site-built home" means a dwelling unit where the major components are fabricated and assembled at the building site or a dwelling unit constructed at a house construction factory located within Washoe County. Site-built homes shall comply with Washoe County building codes and other adopted local codes.

Slope. "Slope" means an inclined ground surface expressed as a ratio of horizontal distance to vertical distance.

Slaughter House, Agricultural. "Agricultural slaughter house" means a building used as an ancillary structure on a farm or ranch for the non-profit slaughtering of animals raised on-site and the processing and storage of animal products and waste that results from a slaughtering process.

Slaughter House, Commercial. "Commercial slaughter house" means a building used for the for-profit slaughtering of animals that are either raised on-site or transported to the building and the processing and storage of animal products and waste that results from a slaughtering process.

Solar Energy. "Solar energy" means energy derived from the sun's rays.

Specific Plan. "Specific plan" means a plan prepared for a portion of an area plan which prescribes uses and development standards for that portion.

Story. "Story" is that portion of a building included between the upper surface of any floor and the upper surface of the floor next above, except that the topmost story shall be that portion of a building included between the upper surface of the topmost floor and the ceiling or roof above. If the finished floor level directly above a usable or unused under-floor space is more than six (6) feet above grade as defined herein for more than fifty (50) percent of the total perimeter or is

more than twelve (12) feet above grade as defined herein at any point, such usable or unused under-floor space shall be considered as a story.

Story, First. "First story" is the lowest story in a building which qualifies as a story, as defined herein, except that a floor level in a building having only one (1) floor level shall be classified as a first story, provided such floor level is not more than four (4) feet below grade, as defined herein, for more than fifty (50) percent of the total perimeter, or more than eight (8) feet below grade, as defined herein, at any point.

Stream. “Stream” means a general term for a body of flowing water; natural watercourse containing water at least part of the year. In hydrology, the term is generally applied to the water flowing in a natural channel as distinct from a canal. Some classifications of streams include, in relation to time:

(a) Ephemeral Streams. Streams that flow only in direct response to precipitation and whose channel is at all times above the water table.

(b) Intermittent or Seasonal Streams. Streams that flow only at certain times of the year when it receives water from springs, rainfall, or from surface sources such as melting snow.

(c) Perennial Streams. Streams that flow continuously.

Streambanks. “Streambanks” mean the usual boundaries, not the flood boundaries, of a stream channel. Right and left banks are named facing downstream (in the direction of flow).

Street. "Street" means a public right-of-way or easement which affords a primary means of access to abutting property.

Structure. "Structure" means a walled and roofed building or manufactured home, including a gas or liquid storage tank that is primarily above ground. "Structure" does not include a tent, trailer or vehicle.

Subdivider. "Subdivider" means any person or persons, firm, corporation, partnership or association that causes land to be divided into a subdivision for himself or itself or for others. A consultant, engineer or surveyor who does not hold title to the land is not considered a subdivider.

Subdivision. "Subdivision" means any land, vacant or improved, which is divided or proposed to be divided vacant or improved, into two (2) or more lots, parcels, sites, units or plots for the purposes of any transfer, development or any proposed transfer or development unless exempted by one of the following provisions:

(a) "Subdivision" does not apply to any division of land which creates lots, parcels, sites, units or plots of land each of which comprise forty (40) or more acres of land, or 1/16 of a section, including roads and roadway easements, which is subject to the provisions of Article 612.

(b) Any joint tenancy or tenancy in common shall be deemed a single interest in land.

(c) Unless a method of disposition is adopted for the purpose of evading this Development Code or would have the effect of evading this Development Code, the term "subdivision" does not apply to:

(1) Any division of land which is ordered by any court in this state or created by operation of law;

(2) A lien, mortgage, deed of trust or any other security instrument;

(3) A security or unit of interest in any investment trust regulated under the laws of this state or any other interest in an investment entity;

(4) Cemetery lots; or

(5) An interest in oil, gas, minerals or building materials which are not or hereafter severed from the surface ownership or real property.

(d) "Subdivision" does not apply to creation of parcels of more than (10) acres for agricultural purposes if a street, road or highway opening, widening or easement of any kind is not involved.

(e) For the purposes of the definition "subdivision," any interest in land created or established as joint tenancy or a tenancy in common shall be a single interest and not an interest in common, if, and only if, the use or development or the proposed use or development of such land would not be a subdivision as defined in this section if undertaken or proposed by a single entity, whether corporate or an individual. See "Major Subdivision" and "Minor Subdivision."

Substantial Improvement. "Substantial improvement" means any repair, reconstruction, additions or other improvement of a structure, the cost of which equals or exceeds fifty (50) percent of the market value of the structure either before the improvement or addition is started or, if the structure has been damaged, before the damage occurred, regardless of the actual repair work performed. For the purpose of this definition, "substantial improvement" is considered to occur when the first alteration of any wall, ceiling, floor or other structural part of the building commences, whether or not that alteration affects the external dimensions of the structure. "Substantial improvement" does not include:

(a) Any project for improvement of a structure to comply with existing state or local health, sanitary or safety code specifications; or

(b) Any alteration of a structure listed on the National Register of Historic Places or a State Inventory of Historic Places.

(1) "Substantial improvement" is considered to occur when the first alteration of any wall, ceiling, floor or other structural part of the building commences, whether or not that alteration affects the external dimensions of the structure; and

(2) "Substantial improvement" does not include improvement of a structure solely to comply with existing state or local health, sanitary or safety code specifications, or any alteration of a structure listed on the National Register of Historic Places or a State Inventory of Historic Places.

Suburban Regulatory Zones. "Suburban regulatory zones" means the Low Density Suburban Regulatory Zone, Medium Density Suburban Regulatory Zone, and High Density Suburban Regulatory Zone.

Surface Runoff. "Surface runoff" means water that results from precipitation which is not absorbed by the soil, evaporated into the atmosphere or entrapped by ground surface depressions and vegetation, and which flows over the ground surface to adjoining properties, storm drains or waterways.

Surveyor. "Surveyor" means a land surveyor registered pursuant to NRS Chapter 625.

Temporary Employee Housing. "Temporary employee housing" means housing for employees of an isolated industrial, mining, railroad, highway, utilities or agricultural based use where those employees occupy the housing on a seasonal basis not more than six (6) months per year. This development may occur on a single parcel or multiple parcels.

Tentative Parcel Map. "Tentative parcel map" means a map which is filed pursuant to Article 606, conforming to the standards and requirements set forth therein.

Tentative Subdivision Map. "Tentative subdivision map" means a preliminary map made to show lot lines, roads, buildings, rights-of-ways and other design factors of a proposed subdivision.

Terrace. "Terrace" means a relatively level step constructed in the face of a graded slope surface for drainage, maintenance and/or development purposes.

Threatened Species. "Threatened species" means any species which is likely to become an endangered species within the foreseeable future and which has been designated in the Federal Register as a threatened species.

Through Lot. See "Lot, Through."

Topography. "Topography" means configuration of a surface, including its relief and the position of natural and man-made features.

Topsoil. "Topsoil" means the upper part of the soil profile that is relatively rich in humus, known in agronomy as the "A-horizon."

Total Developed Land Area. "Total developed land area" means that portion of a property which is disturbed for development purposes including, but not limited to, areas covered by buildings, landscaping, impervious surfaces and other areas graded or excavated to support the development.

Trailer Coach. See "Mobile Home."

Travel Trailer. See "Recreational Vehicle."

Tree. "Tree" means a large, woody perennial plant with one main trunk or multiple trunks, and many branches.

Unladen Weight. "Unladen weight" means the weight of any vehicle without load, but fully equipped with accessories and appliances belonging to and used by such vehicle in the transportation of persons or property.

Uplighting. "Uplighting" means a source of light where the center of the light beam is at an angle greater than the horizontal.

Urban Regulatory Zones. "Urban regulatory zones" means the Low Density Urban Regulatory Zone, Medium Density Urban Regulatory Zone, and High Density Urban Regulatory Zone.

Use or Land Use. "Use" or "land use" means the primary or primary and secondary use(s) of land such as single family residential, multi-family residential, commercial, industrial, agriculture, etc. The description of a particular land use should convey the dominant character of a geographic area and, thereby, establish types of activities which are appropriate and compatible with primary use(s).

Used. "Used" includes "arranged," "designed" or "intended to be used."

Vegetation, Native. "Native vegetation" means plants that grow naturally in Washoe County, Nevada and have adapted to the climate, soil, location and rainfall patterns of their area.

Vegetation, Natural. "Natural vegetation" means plants which exist on a site before clearing or grading.

Viewshed. "Viewshed" means the surface area that can be seen from a specific viewpoint.

Vista. "Vista" means an area of high ground or projecting earth from which there is a dominant and unobstructed view of surrounding areas.

Watercourse. "Watercourse" means any natural or artificial watercourse, stream, river, creek, ditch, channel, canal, conduit, culvert, drain, gully, ravine, arroyo or wash in which water flows in a definite channel, bed or bank.

Waters of the State (Defined) (Nevada Revised Statutes 445A.415). "Waters of the State" means all waters situated wholly or partly within or bordering upon the State of Nevada, including, but not limited to:

(a) All streams, lakes, ponds, impounding reservoirs, marshes, water courses, waterways, wells, springs, irrigation systems and drainage systems; and

(b) All bodies or accumulations of water, surface and underground, natural or artificial.

Wetland. "Wetland" means an area that is periodically inundated or saturated by surface or groundwater on an annual or seasonal basis, that displays hydric soils, and that typically supports or is capable of supporting hydrophytic vegetation.

Wetlands (COE and EPA) (Regulatory). "Wetlands (COE and EPA)" means the U.S. Army Corps of Engineers (COE) and the U.S. Environmental Protection Agency (EPA) have adopted a regulatory definition for administering the Section 404 permit program of the Clean Water Act (CWA) as follows: [Wetlands are] those areas that are inundated or saturated by surface or groundwater at a frequency and duration sufficient to support, and that under normal circumstances do support, a prevalence of vegetation typically adapted for life in saturated soil conditions. Wetlands generally include swamps, marshes, bogs and similar areas.

Wetlands (NRCS) (Technical). "Wetlands (NRCS)" mean the (U.S. Department of Agriculture) Natural Resources Conservation Service (NRCS) [formerly the Soil Conservation Service (SCS)] uses the following definition for identifying wetlands on agricultural land in assessing farmer eligibility for U.S. Department of Agriculture program benefits under the "Swampbuster" provision of the Food Security Act (FSA) of 1985. As amended in 1990, the FSA states that the term "wetland," except when such term is part of the term "converted wetland," means land that:

(a) Has a predominance of hydric soils;

(b) Is inundated or saturated by surface or ground water at a frequency and duration sufficient to support a prevalence of hydrophytic vegetation typically adapted for life in saturated soil conditions; and

(c) Under normal circumstances does support a prevalence of such vegetation.

Will Serve Letter. "Will serve letter" means a letter from a utility purveyor assuring the provision of services for proposed development.

Yard. "Yard" means an open space on the same lot or parcel used with the building, extending from the setback line to the nearest lot line, to be unoccupied and unobstructed except as provided in the Development Code.

Yard, Front. "Front yard" means a yard lying between the setback line and the front lot line and extending across the full width of the lot or parcel. In the case of either a corner lot or an interior lot with multiple street frontages, all yards abutting streets, other than collectors or arterials, shall be considered as front yards.

Yard, Rear. "Rear yard" means a yard between the setback line and the rear lot line and extending across the full width of the lot or parcel. On a corner lot, the side opposite the shortest front yard width is considered the rear yard of the lot.

Yard, Side. "Side yard" means a yard lying between the setback line and the side lot line and extending from the front yard line to the rear yard line.

Zone or Regulatory Zone. "Zone" or "Regulatory Zone" means a portion of the unincorporated area of Washoe County which is specifically designated in Article 106 of this Development Code.

[Amended by Ord. 867, provisions eff. 5/27/93; Ord. 873, provisions eff. 6/7/93; Ord. 890, provisions eff. 11/29/93; Ord. 893, provisions eff. 3/4/94; Ord. 899, provisions eff. 5/31/94; Ord. 916, provisions eff. retro. to 5/26/93; Ord. 942, provisions eff. 4/1/96; Ord. 965, provisions eff. 10/1/96; Ord. 1076, provisions eff. 10/1/99; Ord. 1088, provisions eff. 1/28/00; Ord. 1089, provisions eff. retro to 1/1/00; Ord. 1091, provisions eff. 4/28/00; Ord. 1102, provisions eff. 8/11/00; Ord. 1112, provisions eff. 2/15/01; Ord. 1140, provisions eff. 12/31/01; Ord. 1156, provisions eff. 3/22/02; Ord. 1234, provisions eff. 05/21/04; Ord. 1238, provisions eff. 6/4/04; Ord. 1288 and 1290, provisions eff. 3/24/06; Ord. 1347, provisions eff. 11/2/07; Ord. 1356, provisions eff. 12/21/07; Ord. 1447, provisions eff. 9/9/10; Ord. 1451, provisions eff. 1/1/11; Ord. 1485, provisions eff. 3/27/12; Ord. 1504, provisions eff. 3/8/13.]

Article 904
NONCONFORMANCE

[This Article amended in its entirety by Ord. 889, provisions eff. 11/29/93; Ord. 899, provisions eff. 5/31/94.]

Sections:

110.904.00	**Purpose**
110.904.05	**Finding of Incompatibility**
110.904.10	**Types of Nonconformance**
110.904.15	**Nonconforming Lot**
110.904.20	**Nonconforming Use of Land**
110.904.25	**Nonconforming Use of a Structure**
110.904.30	**Nonconforming Structure**
110.904.35	**Nonconforming Development**
110.904.40	**Replacement Cost**
110.904.45	**Nonconforming Public Use**
110.904.50	**Historic Building, Structures or Sites**
110.904.55	**Illegal Lots and Use of Structures and Land within a Sphere of Influence**
110.904.60	**Requirement for Bringing a Nonconforming Use of Land or Nonconforming Use of a Structure into Compliance with the Provisions of the Development Code**

Section 110.904.00 Purpose. The intent of this article, Article 904, Nonconformance, is to regulate lots, structures and uses of land and structures which were lawful before the adoption or amendment of this Development Code, but which no longer comply. The additional intent of this article is to permit those nonconformities to continue until they are removed or required to be terminated, but not to encourage their continuance.

Section 110.904.05 Finding of Incompatibility. Nonconforming uses and structures are declared to be incompatible with permitted uses, structure and standards in the regulatory zones involved. They shall not be enlarged upon, expanded, extended or replaced, not be used as ground for adding other structures or uses prohibited elsewhere in the same regulatory zone, except as may be expressly permitted in this article.

Section 110.904.10 Types of Nonconformance. This article regulates the categories of nonconformance listed below in this section. If a nonconforming use falls into two (2) or more categories, it shall be subject to the regulations of each category.

(a) Nonconforming Lot. A lot which was legal when brought into existence but does not conform to the current lot size or shape requirements of the regulatory zone where it is located. A nonconforming lot is subject to the provisions of Section 110.904.15.

(b) Nonconforming Use of Land. A use which does not involve a structure and which was legal when brought into existence but does not conform to the current

uses allowed in the regulatory zone where it is located. A nonconforming use of land is subject to the provisions of Section 110.904.20.

(c) Nonconforming Use of a Structure. A use which is conducted at least partially within a structure and which was legal when brought into existence but does not conform to the current uses allowed in the regulatory zone where it is located. A nonconforming use of structure is subject to the provisions of Section 110.904.25.

(d) Nonconforming Structure. A building or structure which was legal when brought into existence but does not conform to the current height, setback or coverage requirements of the regulatory zone where it is located. A nonconforming structure is subject to the provisions of Section 110.904.30.

(e) Nonconforming Development. A development which was legal when brought into existence but does not conform to the current parking, loading or landscaping requirements of the regulatory zone where it is located. A nonconforming development is subject to the provisions of Section 110.904.35.

Section 110.904.15 Nonconforming Lot. A nonconforming lot containing a building or structure may continue to be used as a building site as long as other provisions of this article, including yard, coverage, sewer, water and drainage requirements, are met. A nonconforming lot may be used as a building site, provided the access requirements, building setback requirements, and infrastructure requirements of this Development Code are met.

Section 110.904.20 Nonconforming Use of Land. The nonconforming use of land shall be subject to the provisions of this section.

(a) Continuation. A nonconforming use of land may be continued as long as it remains otherwise lawful, subject to the following provisions:

(1) Any structure associated with such use shall not be enlarged or increased more than ten (10) percent, nor the use extended to occupy an area of land greater than ten (10) percent than was occupied on the effective date of this article;

(2) If such a use ceases for any reason for a period of more than twelve (12) consecutive months, any subsequent use of such land shall conform to the requirements of this Development Code for the regulatory zone in which it is located; and

(3) The storage of inoperable vehicles in contravention to the provisions of the Development Code shall not be considered a nonconforming use and shall be required to conform to the provisions of this Development Code.

(b) Adding New Uses or Structures. When a nonconforming use exists on any lot, no new use or structure shall be established or built on such lot unless the lot area, dimensions and yards provided for each existing and proposed use or structure conform to the requirements of this Development Code for the regulatory zone in which the lot is located.

(c) Change to Another Nonconforming Use. A nonconforming use of land shall not be changed to another nonconforming use of land.

Section 110.904.25 Nonconforming Use of a Structure. The nonconforming use of a structure shall be subject to the provisions of the section.

(a) Continuation. A nonconforming use of a structure may be continued as long as it remains otherwise lawful, subject to the following provisions:

(1) A structure devoted to a nonconforming use shall not be enlarged more than ten (10) percent, extended, constructed, reconstructed, moved or structurally altered;

(2) Any structure in which a nonconforming use is superseded by an allowed use shall thereafter conform to the regulations for the regulatory zone in which such structure is located, and the nonconforming use may not thereafter be resumed;

(3) Any nonconforming use may be extended throughout such parts of a structure as were manifestly arranged or designed for such use at the time of adoption of this article, but no such use shall be extended to occupy any land outside such structure;

(4) When a nonconforming use of a structure is discontinued or abandoned for twelve (12) consecutive months, the structure shall not thereafter be used except in conformance with the regulations of the regulatory zone in which it is located; and

(5) When a nonconforming structure has been partially or totally destroyed, the nonconforming use of the structure may be rebuilt provided a building permit is acquired within six (6) months of the damaging event.

(b) Adding New Structures. When a nonconforming use exists in any structure, no new use or structure shall be established or built on the lot where the structure is located unless the lot area, dimensions and yards provided for each existing and proposed use or structure conform to the requirements of this Development Code for the regulatory zone in which the lot is located.

Section 110.904.30 Nonconforming Structure. A nonconforming structure shall be subject to the provisions of this section.

(a) Continuation. Any nonconforming structure may be continued as long as it remains otherwise lawful, subject to the following provisions:

(1) Such structure may not be enlarged more than ten (10) percent or altered except as specifically provided for by this section;

(2) If the use ceases for any reason for more than twelve (12) consecutive months, any subsequent use of the structure shall conform to the requirements of the Development Code for the regulatory zone in which it is located;

(3) If a structure is partially or totally destroyed, the nonconforming use of the structure may be rebuilt, provided a building permit is acquired within six (6) months of the damaging event;

(4) Should such structure be moved for any reason for any distance whatever, it shall thereafter conform to the regulations for the regulatory zone in which it is located;

(5) Such structure may be remodeled or repaired provided that the cost of such remodeling or repair is not more then fifty (50) percent of its replacement cost and that the structure is not enlarged more than ten (10) percent, as it existed at the time of adoption or amendment of this Development Code;

(6) Nothing in this article shall be deemed to prevent the strengthening or restoring to a safe condition of any building or part thereof declared to be unsafe by any County or state official charged with protecting the public health or safety, upon order of such official; and

(7) On any property whose boundary was adjusted on or before June 13, 1981, a nonconforming structure which exists and is in nonconformance when this ordinance is adopted, and which is subsequently destroyed or removed from the property may be replaced by a structure appropriate to the same use within six (6) months.

(b) Adding New Uses or Structures. When a nonconforming structure exists on any lot, no new use or structure shall be established or built on such land unless the lot area, dimensions and yards provided for each existing and proposed use or structure conform to the requirements of this Development Code for the regulatory zone in which the lot is located.

Section 110.904.35 Nonconforming Development. A nonconforming development shall be subject to the provisions of this section. Existing conforming buildings or uses whose off-street parking and loading do not conform to the provisions of this Development Code may be expanded or have facilities added, and one conforming use may be changed to another, provided that the requirements for off-street parking and loading spaces are complied with in accordance with Article 410.

Section 110.904.40 Replacement Cost. In the absence of proof to the contrary, replacement cost as used in this article shall mean the assessed value of the building or structure at the time of the destruction.

Section 110.904.45 Nonconforming Public Use. Additions, extensions or alterations may be made to any nonconforming public use including, but not limited to, schools, parks, libraries and fire stations, if the addition, extension or alteration meets the provisions of this section.

(a) Expansion. The addition, extension or alteration shall not extend beyond the boundaries of the site in existence when the use became nonconforming.

(b) Parking. The addition, extension or alteration shall not infringe upon any off-street parking required by this Development Code.

Section 110.904.50 Historic Building, Structures or Sites. Notwithstanding any other provisions of this article, a building, structure or site which is listed on the National Register of Historic Places or the State Register of Historic Places shall be allowed to continue to exist and be repaired, restored or reconstructed as long as it complies with federal and state regulations and statutes regarding historic buildings, structures and sites. The building, structure or site may be expanded upon approval of a special use permit.

Section 110.904.55 Illegal Lots and Use of Structures and Land within a Sphere of Influence. The creation of a lot, or the use of a structure or land, that occurred in contravention to the provisions of Section 110.106.30 and which was created prior to November 29, 1993 shall be considered an illegal use and not subject to the provisions of this article.

[Amended by Ord. 1447, provisions eff. 9/9/10.]

Section 110.904.60 Requirement for Bringing a Nonconforming Use of Land or Nonconforming Use of a Structure into Compliance with the Provisions of the Development Code. Except as provided for in this article, a nonconforming use of land or a nonconforming use of a structure shall be brought into conformance with the provisions of this Development Code at the time that a ministerial permit (e.g. building permit) is issued, or at the time that an approved discretionary permit (e.g. special use permit) becomes effective.

Article 906
FEES

[Section 110.906.15 entitled "Simultaneous Applications" repealed by Ord. 959, provisions eff. 7/26/96. This Article amended in its entirety by Ord. 1137, provisions eff. 12/1/01.]

Sections:

110.906.00	**Purpose**
110.906.05	**Fee Schedule**
110.906.10	**Exempt Entities**
110.906.20	**Expired Approval**
110.906.25	**Amendment to Approval**
110.906.30	**Specialists**
110.906.35	**Refund of Application Fees**

Section 110.906.00 Purpose. The purpose of this article, Article 906, Fees, is to provide information on fees required for actions pursuant to this Development Code.

Section 110.906.05 Fee Schedule. The fees for processing applications shall be as set forth in the master fee schedule adopted by resolution by the Board of County Commissioners.

Section 110.906.10 Exempt Entities. No fees shall be required pursuant to this article of a governmental entity or agency thereof.

Section 110.906.20 Expired Approval. If an application is made for a Master Plan amendment, Regulatory Zone map amendment or tentative subdivision map for which application has been previously made and has expired, and if the new application does not increase the scope or size of the change, map, project or the subject of the expired application, the applicant shall pay the application fee minus those amounts required to be paid for each dwelling unit, acre of land, or square foot of floor area.

[Amended by Ord. 1447, provisions eff. 9/9/10.]

Section 110.906.25 Amendment to Approval. If an applicant has previously received approval of, or a resolution of intent to approve, a Master Plan amendment, Regulatory Zone map amendment, or tentative subdivision map, and the applicant proposed an amendment to the approved Master Plan amendment, Regulatory Zone map amendment, or map or an amendment to the conditions contained in the resolutions of intent, the applicant shall submit an application for such amendment and shall pay the following:

(a) The applicable fee minus the amounts payable for each dwelling unit, acre of land or square foot of floor area which was included in the original application; and

(b) The applicable fee for each dwelling unit, acre of land or square foot of floor area which exceeds the number of units, acres or square feet included in the original application.

[Amended by Ord. 1447, provisions eff. 9/9/10.]

Section 110.906.30 Specialists. Whenever evaluation of any development application requires the use of professional assistance not available within County government, processing of the application may be conditioned upon payment by the applicant of the reasonable cost of obtaining such assistance.

Section 110.906.35 Refund of Application Fees. The Director of the Department of Community Development shall refund development application fees based upon the following criteria:

(a) One hundred percent (100%) of the total application fee shall be refunded if the following situations occur:

(1) The Director of the Department of Community Development determines that the application is not needed to accomplish the applicant's intent; or

(2) The applicant requests a voluntary withdrawal of the application before the application is circulated to reviewing agencies and/or the Citizen Advisory Boards, whichever first occurs.

(b) Fifty percent (50%) of the application fee collected for services provided by the Department of Community Development shall be refunded if the applicant and the Director of the Department of Community Development mutually agree that the application should be withdrawn and that agreement is reached before the planning staff's analysis report for the application is started.

(c) No refund (0%) of the total application fee, or the fee collected for services provided by the Department of Community Development, shall be granted once the written analysis of the application by the staff has been started.

(d) The determination to refund, or not refund, fees may be appealed to the Board of County Commissioners within ten (10) days of the decision by the Director of the Department of Community Development.

Article 908
ISSUANCE OF PERMITS AND LICENSES

Sections:

110.908.00	**Purpose**
110.908.05	**Issuance of Building Permit**
110.908.10	**Duties of Building Inspector**
110.908.15	**Issuance of Business License**
110.908.20	**Duties of Department of Community Development**

Section 110.908.00 Purpose. The purpose of this article, Article 908, Issuance of Permits and Licenses, is to ensure that building permits and business licenses are not issued for businesses that do not comply with the provisions of this article.

Section 110.908.05 Issuance of Building Permit.

(a) Other Approvals. No building permit shall be issued for the erection or use of any structure or part thereof for the use of any land which is not in accordance with the provisions of this Development Code. Exceptions shall be when a variance, administrative permit, or special use permit has been issued by the proper authority. In these cases, the County Building Inspector may issue a building permit sufficient to allow the work authorized by such variance, administrative permit, or special use permit, in accordance with whatever conditions are attached, but such building permit shall not be issued unless no appeal has been filed and all time limits for appeal have been exhausted.

(b) Compliance with Development Code. Any permit issued contrary to the provisions of this Development Code is void.

(c) Definition. For purposes of this Development Code, a building permit shall include permits for new construction, remodeling, and setup of fabricated homes.

[This Section amended by Ord. 959, provisions eff. 7/26/96.]

Section 110.908.10 Duties of Building Inspector. Before issuing a building permit, the Building Inspector shall ascertain the exact location of the property on which the building is to be located. The Building Inspector shall obtain on the building permit application the assessor's parcel number and the street address or, if none exists, a description of the property before processing a building permit application. Before the building permit is issued, the Building Inspector shall obtain an opinion from the Department of Community Development whether the proposed building(s) complies with the provisions of this Development Code or the terms of a variance, administrative permit, or special use permit.

[This Section amended by Ord. 959, provisions eff. 7/26/96.]

Section 110.908.15 Issuance of Business License.

(a) Other Approvals. No business license shall be issued for the use of any structure or part thereof or for the use of any land which is not in accordance with the provisions of this Development Code. Exceptions shall be when the variance, administrative permit or special use permit has been issued by the proper authority. In these cases, the Department of Community Development may issue a license, sufficient to allow the business authorized by such variance, administrative permit, or special use permit, in accordance with whatever conditions are attached, but such license shall not be issued unless no appeal has been filed and all time limits for appeal have been exhausted.

(b) Compliance with Development Code. Any business license issued contrary to the provisions of this article is void.

[This Section amended by Ord. 959, provisions eff. 7/26/96.]

Section 110.908.20 Duties of Department of Community Development. Before issuing a business license, the Department of Community Development shall ascertain the exact location of the property on which the business is to be located. The Department of Community Development shall obtain on the business license application the assessor's parcel number, the street address or, if none exists, a description of the property and the type of business before processing a business license application. Before the business license is issued, the Department of Community Development shall determine whether the proposed business(es) complies with the provisions of this Development Code or the terms of a variance, administrative permit, or special use permit.

[This Section amended by Ord. 959, provisions eff. 7/26/96.]

Article 910
ENFORCEMENT

Sections:

110.910.00	**Purpose**
110.910.02	**Definitions**
110.910.05	**Responsibility for Enforcement**
110.910.10	**Applicability; Prohibitions; and Remedies**
110.910.15	**Enforcement Procedures**

Section 110.910.00 Purpose. The purpose of this article, Article 910, Enforcement, is to provide guidelines for the enforcement of the Development Code.

Section 110.910.02 Definitions. For purposes of this article, the following words have the following meanings.

Aggrieved Person. "Aggrieved person" means a person or entity who has suffered a substantial grievance (not merely a party who is dissatisfied with a decision) in the form of either:

(a) The denial of or substantial injury to a personal or property right, or

(b) The imposition of an illegal, unjust or inequitable burden or obligation by an enforcement official, the Board of Adjustment or an administrative hearing officer.

Dangerous Structure or Condition. "Dangerous structure or condition" means a structure or condition that is a public nuisance which may cause injury to or endanger the health, life, property or safety of the general public or the occupants, if any, of the real property on which the structure or condition is located. The term includes, without limitation, a structure or condition that:

(a) Does not meet the requirements of a code or regulation adopted pursuant to NRS 244.3675 with respect to minimum levels of health or safety; or

(b) Violates an ordinance, rule or regulation regulating health and safety enacted, adopted or passed by the Board, the violation of which is designated as a public nuisance in the ordinance, rule or regulation.

Development Regulation. "Development regulation" means:

(a) All of the provisions and requirements in the Development Code (as defined in Washoe County Code Section 110.902.15) as it now exists and hereafter may be amended or modified;

(b) The conditions, provisions and requirements in all permits (special use permits, grading permits, sign permits and the like), development agreements, subdivision maps, parcel maps, division of large parcels, and other orders and agreements authorized under and whose primary purpose is to implement or apply the provisions in the Development Code as to particular properties;

(c) Any stop activity order, remediation order, abatement order, or other proceeding authorized in this article; and

(d) Any ordinance, code or regulation relating to the soundness of structures adopted under NRS 244.3675 and the provisions of any permit or order issued pursuant to such ordinance, code or regulation.

[Added by Ord. 1501, provisions eff. 11/2/12.]

Section 110.910.05 Responsibility for Enforcement. The Board of County Commissioners designates the following persons to be "enforcement officials" with the authority and responsibility of enforcing the development regulations within their assigned areas of responsibility. Enforcement officials may only act within the field of enforcement in which they work. Within the foregoing scope, and subject to any specific provisions in any development regulation, enforcement officials have the power to issue and serve citations under NRS 171.17751, and issue and serve notices and carry out the provisions set forth in this article. Enforcement officials include:

(a) Building inspectors, code enforcement officers, fire and safety inspectors, and engineering inspectors;

(b) The Director of Community Development or the Director of the Community Services Department, and all deputies and persons designated by him/her in writing to enforce provisions of development regulations;

(c) The County Building Official and all deputies and persons designated by him/her in writing;

(d) The County Engineer and any person designated by him/her in writing; and

(e) Any other person as specifically provided in a development regulation.

[Amended by Ord. 1501, provisions eff. 11/2/12.]

Section 110.910.10 Applicability; Prohibitions; and Remedies.

(a) Applicability. Unless otherwise provided in a specific statute, ordinance, code provision or regulation, this article applies to the enforcement of all provisions in development regulations. As there may be procedures and remedies specific to a type of activity being regulated, if a specific provision in another code or regulation conflicts with a specific provision in this article, the other specific provision shall prevail but otherwise, provisions in another code or regulation shall be read together as supplements to the provisions in this article.

(b) Prohibition; Public Nuisance. Erecting, operating or maintaining any property or structure contrary to the provisions of a development regulation shall be and is hereby declared to be unlawful and a public nuisance. Any property or structure that does not conform to the provisions of an applicable development regulation shall be and is hereby declared to be a public nuisance.

(c) Misdemeanor Offense. Any person who commits a prohibited act as described above or who violates any of the provisions in a development regulation is guilty of a misdemeanor and upon the conviction thereof, shall be punished by imprisonment in the county jail for not more than six (6) months, or by a fine of

not less that $50 or more than $1,000, or by fine and imprisonment. Failure to appear in the proper court to answer to such a misdemeanor citation is a separate offense.

(d) Remedies. An enforcement official may, subject to the procedures and limitations in this article, enforce development regulations through administrative, civil or criminal remedies including but not limited to:

(1) Stop activity orders in accordance with this article;

(2) Remediation orders in accordance with this article;

(3) Administrative enforcement proceedings as provided in this article and the Enforcement Code in Washoe County Code Chapter 125;

(4) Abatement proceedings (including summary abatement) as provided in Washoe County Code Chapter 125 and NRS 244.360 through 244.3605;

(5) Civil injunctions and relief in accordance with the authority given to the District Attorney in Washoe County Code Chapter 125 and Nevada law regarding civil actions;

(6) Criminal citation in accordance with NRS 171.177 through 171.1779 and this article;

(7) Revocation of or denial of a violated permit, variance, map or approval through the approving authority;

(8) Cancellation by the Board of a development agreement entered into under NRS 278.0205; and,

(9) Any other remedy authorized by law.

(e) Remedies Cumulative. The remedies provided herein shall be cumulative and not exclusive. The conviction and punishment of any person shall not relieve such person from the responsibilities of correcting prohibited conditions or removing prohibited conditions, buildings, structures or improvements and shall not prevent the enforced correction or removal thereof.

[Amended by Ord. 1501, provisions eff. 11/2/12.]

Section 110.910.15 Enforcement Procedures. The following procedures shall apply to enforce the provisions of any development regulation

(a) Complaints. Complaints regarding possible violations of a development regulation may be made orally or in writing and shall be referred to the Director of Community Development, the Director of Community Services, the Building Official, the County Engineer or any of their designees, who may assign an enforcement official to investigate and take appropriate enforcement action. Oral complaints may be made anonymously. Enforcement officials and County employees who observe or become aware of possible violations of a development regulation shall discuss the possible violation with the Director of Community Development, the Director of Community Services, the Building

Official, the County Engineer or any of their designees, who may direct enforcement actions.

(b) Selection of Enforcement Mechanism. The enforcement official in his/her discretion may enforce a development regulation in any manner provided in this article.

(c) Stop activity order and remediation order:

(1) If an enforcement official observes construction, grading, or other land use activity in progress that is or is likely to be a violation of a development regulation, and the activity must be stopped to prevent unsafe conditions, or irreparable harm or damages, the enforcement official may issue and serve a stop activity order. Upon issuance of a stop activity order all activity described in the order must cease.

(2) The stop activity order shall:

(i) Name the property owner as well as any person who is ordered to stop the activity;

(ii) Describe the location and nature of the illegal activity observed and why it appears to be a violation of the development regulation (with specific citation to the regulation);

(iii) Describe which activities must stop and the duration of the stop order;

(iv) State the possible consequences of a failure to obey the order, including, as applicable:

(A) Civil penalties (specify what those penalties will be),

(B) A misdemeanor criminal citation,

(C) A court complaint for injunctive relief or damages,

(D) Abatement by the County,

(E) Any other relief authorized by law.

(v) Provide the name, address, email address and phone number of enforcement official and any person who should be contacted to discuss or resolve the stop activity order; and

(vi) Describe the right to ask for a hearing before an administrative hearing officer, the deadline to request a hearing, and provide the appropriate forms.

(3) Remediation Order. If a violation of a development regulation threatens the health, safety or welfare of the general public, and immediate action is necessary to remove an unsafe condition, an enforcement official may, issue a remediation order directing a person to:

(i) Repair, safeguard, or eliminate a dangerous structure or condition;

(ii) Clear debris, rubbish and refuse which is not subject to the provisions of Chapter 459 of NRS;

(iii) Clear weeds and noxious plant growth; or

(iv) Repair, clear, correct, safeguard or eliminate any other public nuisance as defined in this article.

(4) The remediation order shall:

(i) Name the property owner and any/or other person who is ordered to remediate the illegal activity.

(ii) Describe the location and nature of the violation of the development regulation (with specific citation to the regulation), explain that the condition is an unsafe condition requiring immediate remediation.

(iii) List and describe the corrective actions that need to be taken to remedy the unsafe condition.

(iv) Specify a date by which the respondent must abate the public nuisance.

(v) Specify the possible consequences of a failure to obey the order to include, as applicable,

(A) Abatement by the County;

(B) Civil penalties (specify what those penalties will be);

(C) A misdemeanor criminal citation;

(D) A court complaint for injunctive relief or damages;

(E) Any other relief authorized by law.

(vi) Provide the name, address, email address and phone number of enforcement official and any person who should be contacted to discuss or resolve the remediation order.

(vii) Describe the right to ask for a hearing before an administrative hearing officer, the deadline to request a hearing, and provide the appropriate forms.

(5) Stop activity orders and remediation orders should be personally served on the person ordered to stop or remedy the violation. In addition, all stop activity and remediation orders shall be sent to the property owner by certified mail, return receipt requested, to the address indicated the assessor's records for the property. The order is effective on the earlier date of personal service or service by mail. Each person who serves a

stop activity order or remediation order shall prepare a sworn affidavit specifying the date, time, and nature of service.

(6) Any person who has been named and served with a stop activity order and continues to do any activity in violation of the order, except activity that is directed or approved by the enforcement official is guilty of a misdemeanor, and each day or part of a day that the person continues to perform the activity is a separate offense. Any person who has been named in and served with a remediation order who unreasonably fails to perform the required remediation activity by the deadline indicated shall be guilty of a misdemeanor, and each day or part of a day that the person continues to fail to perform the activity shall be a separate offense.

(7) The stop activity order or remediation order may provide for the imposition and collection of civil penalties, and for the possibility of abatement as specified in Washoe County Code Chapter 125.

(8) Hearing Required; Appeals. Because of their injunctive nature, if any person who is served with a stop activity order or remediation order asks for a hearing, an administrative hearing officer will expeditiously be appointed and a hearing will be conducted within thirty (30) days. A stop activity order remains in effect pending the hearing. The deadline for a remediation order is suspended pending the hearing. The hearing will be conducted in accordance with the provisions for hearings, and the issuance, enforcement and appeal of administrative orders as set out in Washoe County Code Chapter 125. The decision of the administrative hearing officer is appealable to the Board of Adjustment in accordance with this article, or may be taken directly to judicial review in accordance with Washoe County Code Chapter 125 at the option of the appellant. If appeal is made to the Board of Adjustment, the decision of the Board of Adjustment is subject to judicial review in accordance with this article.

(9) A stop activity order or remediation order may be rescinded by the enforcement official that issued it; by the Director of the Community Development Department, the Director of Community Services, the County Engineer or the Building Official; by an administrative hearing officer; and/or, by the Board of Adjustment.

(10) Enforcement. If a hearing is held before an administrative hearing officer as provided above, then the decision or order of the administrative hearing officer shall be enforced as provided in Washoe County Code Chapter 125. If a hearing is not held, the enforcement official may proceed to enforce the stop activity or remediation order through any of the administrative, civil or criminal remedies provided in this article.

(d) Administrative Enforcement Proceedings. The enforcement official may construe the violation of any provision in a development regulation as an administrative offense and pursue all procedures and remedies in Washoe County Code Chapter 125, subject to the following provisions:

(1) Appeal to Board of Adjustment. Any aggrieved person may appeal a decision or order of an administrative hearing officer to the Board of Adjustment in accordance with the Rules of the Board of Adjustment.

(2) Grading Violations. If an enforcement official observes grading that is being done without a permit, in violation of a permit, or in violation of a development regulation, the enforcement official may proceed in an expedited manner as provided in Article 438, Grading Standards, of the Development Code.

(e) Summary Abatement Proceedings without Advance Notice under Washoe County Code Section 125.210. If a determination is made under NRS 244.3601 (3) that a dangerous structure or condition exists and the dangerous structure or condition places any person's life, health or property in immediate or impending high risk of injury or damage, the enforcement official may pursue summary abatement proceedings as provided in Washoe County Code Sections 125.210 and 125.215 and NRS 244.3601 without advance notice. Except for the requirement of advance notice, the provisions of subparagraph (f) next below apply to these abatement proceedings.

(f) Summary Abatement Proceedings with Notice of Abatement. For serious violations of a development regulation or serious "public nuisances" as defined in Washoe County Code Chapter 50 that are not remedied after the warning or civil penalty has been issued, the enforcement official may issue a notice of abatement and pursue abatement proceedings as provided in Washoe County Code Section 125.195 through 125.205 and NRS 244.360 through 244.3605 subject to the following provisions:

(1) NRS 244.3601 shall apply to these summary proceedings.

(2) An administrative hearing officer shall automatically be appointed and the cost report contemplated in Washoe County Code Section 125.205.3 shall be filed with the administrative hearing officer. The administrative hearing officer shall hold a hearing to take evidence and determine the amount of the assessment against the property and, if contested by the respondent, may take evidence and make a determination as to the condition of the structure, the need for the abatement proceeding (including statements from the three witnesses who determined the dangerous condition existed), and the need for and extent of abatement conducted. The record of the hearing shall be used as the basis for an appeal to the Board of Adjustment or for judicial review.

(3) Appeal to Board of Adjustment. After an administrative hearing officer has issued a ruling on the cost report filed under Washoe County Code Section 125.205.3, any aggrieved person may appeal any decision by the administrative hearing officer to the Board of Adjustment as provided below. The Board of Adjustment may affirm, modify, or reverse the enforcement official's or administrative hearing officer's determination but may not award damages or other relief.

(4) <u>Judicial Review.</u> As provided in NRS 244.3601, any decision of an administrative hearing officer or Board of Adjustment may be the subject of judicial review.

(g) <u>Judicial Abatement Proceedings.</u> For serious violations of a development regulation or serious public nuisances under Washoe County Code Chapter 50 the enforcement official may apply to the District Attorney's office to pursue

abatement proceedings under NRS 244.360 through 244.3605 as authorized in Washoe County Code Section 125.020, subject to the following provisions:

(1) The decision to pursue judicial abatement is the District Attorney's and this remedy should only be used in circumstances needing immediate action where administrative proceedings would not be effective.

(2) The District Attorney may require certain administrative proceedings in Washoe County Code Chapter 125 be completed before abatement litigation is brought.

(3) When the District Attorney files litigation, Nevada statutes and Rules of Civil Procedure govern the proceedings and there is no right to appeal to the Board of Adjustment.

(h) Criminal Proceeding. The enforcement official may, in accordance with NRS 171.17751 prepare a citation and pursue criminal remedies as provided in NRS 171.1773, 171.1776, subject to the following provisions:

(1) The District Attorney, in his/her sole prosecutorial discretion, must approve the use of this procedure before the citation is issued.

(2) The District Attorney will direct all proceedings and may require that certain administrative proceedings be completed before a citation is issued. Interpretations and decisions of the enforcement official during administrative proceedings are subject to appeal to the Board of Adjustment.

(3) Once a criminal citation is issued and is filed with the court, there no longer is a right to appeal any decision to the Board of Adjustment.

(i) Appeals to the Board of Adjustment. Under NRS 278.310, an aggrieved person may appeal an interpretation or decision of an administrative hearing officer made in the course of the administration or enforcement of this article to the Board of Adjustment. The following provisions apply to this appeal process:

(1) Notice. The administrative hearing officer's decision or order shall explain the right to appeal, the appeal procedure, and how to obtain forms.

(2) Forms and Deadline. Unless a different time for appeal is provided in this article or another code or regulation, the appellant shall have twenty (20) calendar days from the date of service of the administrative hearing officer's decision to file an appeal. The appeal shall be prepared on forms provided by and shall be turned in to the Community Development Department or Building Official as the case may be. If an appeal is not received by the Community Development Department or Building Official by the deadline, the right to appeal is deemed waived, and the administrative/civil/abatement/criminal proceeding may proceed.

(3) The burden to establish appellant as an aggrieved party is on the appellant, and the appellant must in his/her appeal request establish by affidavit the nature and location of his or her property interest and the manner in which the property interest will be affected by the decision

being appealed. The Board of Adjustment shall first determine standing to bring the appeal, and may schedule a separate public hearing for that purpose.

(4) Hearing Procedures. The timelines and procedures set out herein and the rules of the Board of Adjustment govern the appeal, except that following the public hearing, the Board of Adjustment shall either affirm, modify, reverse or remand the decision being appealed or any combination thereof, but may not award damages. A written order shall be prepared, executed by the Board of Adjustment Chair, and filed with the Secretary of the Board of Adjustment and a copy of the order shall be served on the appellant.

(5) Judicial Review of Board of Adjustment Decisions. The appellant shall have twenty-five (25) days from the later of:

(i) Filing of the order with the secretary of the Board of Adjustment, or

(ii) The date the order is mailed to the appellant.

(6) When a petition for judicial review is filed, the court rules shall govern the proceeding. This judicial review is in lieu of appeal to the Board as authorized by NRS 278.310 (3)(b).

[Amended by Ord. 1501, provisions eff. 11/2/12.]

[Sections 110.910.20, Remedies; 110.910.25, Penalties; and 110.910.30, Notification of Violation; repealed by Ord. 1501, provisions eff. 11/2/12.]

Article 912
ESTABLISHMENT OF COMMISSIONS, BOARDS AND HEARING EXAMINERS

Sections:

110.912.00	**Purpose**
110.912.05	**Washoe County Planning Commission**
110.912.10	**Washoe County Board of Adjustment**
110.912.15	**Hearing Examiner**
110.912.20	**Appeals to the Board of County Commissioners of a Decision by the Board of Adjustment, the Planning Commission, Hearing Examiner or Other Deciding Body**

Section 110.912.00 Purpose. The purpose of this article, Article 912, Establishment of Commissions, Boards and hearing examiners, is to specify the establishment and authority of the Washoe County Planning Commission, Board of Adjustment and any hearing examiner employed by Washoe County.

[Amended by Ord. 959, provisions eff. 7/26/96.]

Section 110.912.05 Washoe County Planning Commission.

(a) Creation. The Washoe County Planning Commission is hereby created, pursuant to NRS 278.030, to perform all the duties and functions delegated to a County Planning Commission by the terms of NRS 278.010 to 278.630, inclusive.

(b) Membership and Terms of Office.

(1) The Washoe County Planning Commission shall consist of seven (7) members.

(2) The term of office of each member shall be four (4) years, or until his or her successor takes office, except that the terms of two (2) of the members first appointed shall be three (3) years, the terms of two (2) of the members first appointed shall be two (2) years and the term of one (1) of the members first appointed shall be one (1) year.

(c) Appointment and Qualifications.

(1) The Chairman of the Board of County Commissioners shall appoint, subject to the approval of the Board, the members of the Washoe County Planning Commission.

(2) No member shall be a member of the Washoe County Board of County Commissioners, and one (1) member may also be a member of the Board of Adjustment.

(3) The members shall be residents of the unincorporated area of Washoe County and registered voters therein at the time of their appointment and continuously throughout their term of office.

(4) Members of the Planning Commission shall be appointed based on representation as described below. If qualified applicants are not available from a County Commission District at the time that a vacancy occurs in that district, appointments can be made on an At-Large basis.

(i) One (1) member from County Commission District One.

(ii) One (1) member from County Commission District Two.

(iii) One (1) member from County Commission District Three.

(iv) One (1) member from County Commission District Four.

(v) One (1) member from County Commission District Five.

(vi) Two (2) members appointed At-Large without respect to which County Commission District the member shall reside in, except that one (1) member shall reside north of the Truckee River and one (1) member shall reside south of the Truckee River.

(5) In order to effectuate the representation of Planning Commission members as described in subsection (4), the following schedule shall be followed until each County Commission District has one (1) Planning Commission member appointed from each district and two (2) Planning Commissions have been appointed on an At-Large basis:

(i) One (1) member from County Commission District Two in 2003.

(ii) One (1) member from County Commission District Five in 2003.

(iii) One (1) member from County Commission District Three in 2004.

(iv) One (1) member appointed on an At-Large basis who resides south of the Truckee River in 2004.

(v) One (1) member from County Commission District Four in 2005.

(vi) One (1) member from County Commission District One in 2006.

(vii) One (1) member appointed on an At-Large basis who resides north of the Truckee River in 2006.

(d) Vacancies. Vacancies occurring other than through the expiration of a member's term shall be filled for the unexpired term.

(e) Compensation. All members of the Washoe County Planning Commission shall be compensated at a rate of $80.00 per meeting (up to $400.00 per month), and shall receive compensation for reasonable travel expenses and subsistence allowances made necessary in the fulfillment of their official duties.

(f) Removal from Office. Any member of the Washoe County Planning Commission may be removed from office, following a public hearing, by a majority vote of the Board of County Commissioners for inefficiency, neglect of duty, or malfeasance of office.

(g) Meetings and Records.

(1) The Washoe County Planning Commission shall hold at least one (1) regular meeting in each month.

(2) The Washoe County Planning Commission shall adopt rules for the transaction of business and shall keep a record of its resolutions, transactions, findings and determinations. This record shall be a public record.

(3) Complete records of official actions of the Washoe County Planning Commission shall be kept on file in the office of the Department of Community Development.

(h) Chairman and Other Officers.

(1) The Washoe County Planning Commission shall elect its Chairman from among the appointed members.

(2) In addition to electing its Chairman, the Washoe County Planning Commission shall create and fill such other of its offices as it may determine.

(i) Employees.

(1) The Washoe County Planning Commission may appoint such employees as it may deem necessary for its work, whose appointment, promotion, demotion and removal shall be subject to the same provisions of law as govern other corresponding civil employees of the County.

(2) The Washoe County Planning Commission may contract with County planners, engineers, architects and other consultants for such services as it may require.

(j) Funding. The expenditures of the Washoe County Planning Commission, exclusive of gifts, shall be within the amounts appropriated for the purpose by the Board of County Commissioners, which shall provide the funds, equipment and accommodations necessary for the Commission's work.

[Amended by Ord. 906, provisions eff. 7/27/94; Ord. 1156, provisions eff. 3/22/02; Ord. 1200, provisions eff. 6/6/03; Ord. 1288, provisions eff. 3/24/06.]

Section 110.912.10 Washoe County Board of Adjustment.

(a) Creation. The Washoe County Board of Adjustment is hereby created, pursuant to NRS 278.270, to perform all the duties and functions delegated to a County Board of Adjustment by the terms of NRS 278.010 to 278.630, inclusive.

(b) Membership and Terms of Office.

(1) The Washoe County Board of Adjustment shall consist of five members.

(2) The term of office of each member shall be four years, or until his or her successor takes office.

(c) Appointment and Qualifications.

(1) The Chairman of the Board of County Commissioners shall appoint, subject to the approval of the Board, the members of the Washoe County Board of Adjustment.

(2) The members shall hold no other public office, with the exception that one member may also be a member of the Planning Commission.

(3) The members shall be residents of the unincorporated area of Washoe County and registered voters therein at the time of their appointment and continuously throughout their term of office.

(4) Members of the Board of Adjustment shall be appointed based on representation of the County Commission Districts as described below. If qualified applicants are not available from the following County Commission Districts, appointments can be made from the County Commission District which would experience the next vacancy.

(i) One member from County Commission District One.

(ii) One member from County Commission District Two.

(iii) One member from County Commission District Three.

(iv) One member from County Commission District Four.

(v) One member from County Commission District Five.

(d) Vacancies. Vacancies occurring other than through the expiration of a member's term shall be filled for the unexpired term.

(e) Removal from Office. Any member of the Washoe County Board of Adjustment may be removed from office, following a public hearing, by a majority vote of the Board of County Commissioners for inefficiency, neglect of duty, or malfeasance of office.

(f) Powers of Board.

(1) The Washoe County Board of Adjustment shall hear and decide appeals under NRS 278.300(1)(a) and 278.310(1) as provided in subsection (j) of this section.

(2) The Washoe County Board of Adjustment shall also have all the powers pursuant to NRS 278.290 to 278.310, inclusive.

(g) Meetings and Records.

(1) The Washoe County Board of Adjustment may hold at least one regular meeting each month, but may meet less frequently if the Board so decides. The Board may also schedule special meetings as warranted.

(2) The Washoe County Board of Adjustment shall adopt rules for the transaction of business and shall keep a record of its resolutions, transactions, findings and determinations. This record shall be a public record.

(3) Complete records of official actions of the Washoe County Board of Adjustment shall be kept on file in the office of the Planning and Development Division of the Washoe County Community Services Department.

(h) Chairman and Other Officers.

(1) The Washoe County Board of Adjustment shall elect its Chairman from among the appointed members.

(2) In addition to electing its Chairman, the Washoe County Board of Adjustment shall create and fill such other of its offices as it may determine.

(i) Compensation. All members of the Washoe County Board of Adjustment shall be compensated at a rate of $80.00 per meeting (up to $200.00 per month), and shall receive compensation for reasonable travel expenses and subsistence allowances made necessary in the fulfillment of their official duties.

(j) Appeals to the Board of Adjustment

(1) Preface and Definitions. This subsection establishes general rules governing appeals to the Board of Adjustment as required by NRS 278.310 (2). The Board of Adjustment may adopt supplemental rules not inconsistent with these rules. For the purpose of this subsection, “Board” means the Washoe County Board of Adjustment.

(2) Matters that May be Appealed. A person aggrieved (as defined in Section 110.910.02) by any of the following decisions may appeal the decision to the Board of Adjustment:

(i) Decisions of Building Official. Decisions of the Building Official made in the course of enforcing the County Code may be appealed to a hearing officer and the decisions of the hearing officer may be appealed to the Board as provided in WCC 110.910.15. Otherwise, a person aggrieved by his/her inability to obtain a building permit or by the decision of the Building Official made in the course of administration or enforcement of any regulation relating to the soundness of structures may appeal the decision to the Technical Review Board subject to and in accordance with Chapter 100 of this Code (Building Code), and if so appealed, the decision of the Technical Review Board may be appealed to the Board in accordance with this Article. If a

decision of the Building Official is not heard by a hearing officer or the Technical Review Board, then a person aggrieved by the decision may appeal it directly to the Board under this Article; or,

(ii) Decisions of Fire Code Official. Decisions of the Fire Code Official made in the course of enforcing the County Code may be appealed to a hearing officer and the decisions of the hearing officer may be appealed to the Board as provided in WCC 110.910.15. Otherwise, a person aggrieved by his/her inability to obtain a building permit or by the decision of the Fire Code Official made in the course of administration or enforcement of any regulation relating to the soundness of structures may appeal the decision to the Technical Review Board in accordance with Chapter 60 of this Code (Fire Code), and if so appealed, the decision of the Technical Review Board may be appealed to the Board in accordance with this Article. If a decision of the Fire Code Official is not appealed to a hearing officer or the Technical Review Board, then a person aggrieved by that decision may appeal it directly to the Board but only if the decision results in denial of a building permit or is related to the soundness of structures. Decisions relating to public safety or fire code administration or enforcement are not subject to appeal to the Board unless they directly relate to the soundness of a structure or result in denial of a building permit; or,

(iii) A decision of an administrative hearing officer if an administrative enforcement proceeding is completed in accordance with Article 910 of the Development Code; or,

(iv) A decision of the Director the Planning and Development Division made in the course of administration of any zoning regulation or any regulation relating to the location or soundness of structures if the decision cannot be appealed to an administrative hearing officer.

(3) Form and Time for Appeal. Appeals must be in writing on forms or in the format prescribed by, and must delivered to, the Planning and Development Division of the Department of Community Services within 10 calendar days from the date that the decision is communicated in writing to the appellant.

(4) Scheduling of Hearing on Appeal. The Chairman of the Board shall schedule the appeal for a hearing to occur not later than the date of the next regular meeting of the Board but no more than 60 days from the date the appeal was filed in accordance with paragraph (3) unless otherwise agreed with the appellant. Within that timeline, the Chairman of the Board may also schedule a special meeting to hear the appeal. If the appellant fails to observe any prehearing schedule, the Chairman may extend the hearing date for a reasonable period of time.

(5) Prehearing Procedures. The Chairman of the Board of Adjustment may:

(i) Require and oversee ministerial prehearing procedural matters, including prehearing conferences, discovery proceedings,

briefing schedules, evidence assembly and marking; however, matters involving jurisdiction or issues to be heard by the Board, or admissibility of evidence are to be heard by the Board;

(ii) Issue subpoenas compelling witnesses to appear before the Board; and

(iii) Schedule the hearing before the Board.

(6) Record on Appeal; Additional Evidence. A record on appeal shall be prepared by the County (including either a transcript of or a copy of the recording of the proceeding, at the discretion of the Chairman of the Board) and the Board:

(i) Shall review the record on appeal and all evidence, testimony, documents, information and arguments introduced and the decision in the proceedings being appealed;

(ii) Shall afford all parties an opportunity to respond and present relevant and non-repetitious evidence and arguments on all issues being decided on appeal even if it is new evidence;

(iii) Shall conduct a public hearing, and hear and consider relevant information and comments by members of the public, even if they did not appear in the proceeding under appeal;

(iv) May consider, upon disclosure, information and comments communicated to Board members before the hearing; and

(v) May consider maps, adopted master plans to include area plans, and its own knowledge of conditions that exist.

(7) Burden of Proof and Persuasion; Reasons for Reversal of Underlying Decisions; Limitations on Awards.

(i) Decisions of administrative officials, hearing officers, and the technical review boards for building code and fire codes are presumed to be reasonable and lawful, and it is the burden of the appellant to persuade the Board otherwise.

(ii) On an affirmative vote of a majority of the members present at the hearing, the Board may affirm the decision being appealed,

(iii) On a majority vote of all its members [as required by NRS 278.300 (2)], the Board may reverse, modify or remand a decision if the decision:

(A) Was made contrary to the constitution, a statute, an ordinance or regulation, or the law of the case;

(B) Exceeds the jurisdiction or statutory authority of the deciding official or body;

(C) Was made on unlawful procedure;

(D) Is affected by an erroneous interpretation or other error of law;

(E) Is clearly erroneous in view of the reliable, probative and substantial evidence on the whole record, or

(F) Is arbitrary or capricious or characterized by abuse of discretion.

(iv) The Board may not award, allocate or direct the payment of money damages, attorney's fees or costs of the proceeding to any party.

(8) Decision; Communication.

(i) The Board may take a matter under advisement and continue the hearing until its next regularly scheduled meeting, or may set a special public hearing to conclude the matter, and may require briefings or seek opinions of counsel. The Board may render a decision and instruct counsel to prepare a written decision either to be signed by the Chairman of the Board or reviewed at a subsequent meeting by the Board (provided, however, that the outcome shall not be changed at the subsequent meeting).

(ii) The Board must render a written decision within 60 days after the hearing unless otherwise agreed with the appellant.

(iii) When a decision is signed by the Chairman of the Board, a copy shall be delivered to all parties of record, and a copy shall be filed with the secretary to the Board as an official record. When a decision is so served and filed, it is final for purposes of judicial review or appeal. A petition for reconsideration or rehearing is not required as a condition to judicial review or appeal to the Board of County Commissioners.

(9) Appeals of Board of Adjustment Decisions. A party of record who is aggrieved by a decision of the Board of Adjustment may:

(i) Seek judicial review of the decision by filing a petition in the Second Judicial District Court for the State of Nevada within 25 days from the date that the decision becomes final as specified under paragraph (8) above, and pursuant to the rules and rulings of the Court; or,

(ii) Appeal the decision to the Board of County Commissioners in accordance with Section 110.912.20 of this Article.

[Amended by Ord. 906, provisions eff. 7/27/94; Ord. 959, provisions eff. 7/26/96; Ord. 1156, provisions eff. 3/22/02; Ord. 1200, provisions eff. 6/6/03; Ord. 1555, provisions eff. 5/8/15.]

Section 110.912.15 Hearing Examiner.

(a) Creation. The position of hearing examiner is hereby created, pursuant to NRS 278.262, to perform all the duties and functions delegated to a hearing examiner by the Board of County Commissioners pursuant to NRS 278.010 to 278.630, inclusive.

(b) Number of Hearing Examiners and Term of Appointment.

(1) Number of Hearing Examiners.

(i) The Chairman of the Board of County Commissioners, subject to the approval of the Board, may appoint as many hearing examiners as deemed necessary to fulfill the responsibilities of that position as enumerated in Subsection (e) (1).

(ii) The Chairman of the Board of County Commissioners shall appoint the Director of Community Development to be a hearing examiner to fulfill the responsibilities of that position as enumerated in Subsection (e) (2). If the Director of Community Development is not qualified to serve as a hearing examiner pursuant to Subsection (c) (3), the Director shall appoint a member of the Department of Community Development who does meet the qualifications to serve as a hearing examiner.

(2) A hearing examiner appointed to fulfill the responsibilities of that position as enumerated in Subsection (e) (1) shall have a term of four (4) years and may be re-appointed to successive four (4) year terms.

(c) Appointment and Qualifications.

(1) The Chairman of the Board of County Commissioners shall appoint, subject to the approval of the Board, hearing examiners.

(2) A hearing examiner shall hold no other public office, except as provided in Subsection (b) (1) (ii).

(3) A hearing examiner shall be one of the following:

(i) Licensed architect.

(ii) Licensed attorney.

(iii) Registered engineer.

(iv) Member of the American Institute of Certified Planners.

(d) Removal. A hearing examiner may be removed, following a public hearing, by a majority vote of the Board of County Commissioners for inefficiency, neglect of duty, or malfeasance.

(e) Powers of Hearing Examiner.

(1) Variances and Special Use Permits. A hearing examiner appointed pursuant to Subsection (b) (1) (i) is empowered to conduct a public hearing and make a decision on a variance application submitted in accordance with the provisions of Article 804, Variances, and on a special use permit application submitted in accordance with the provisions of Article 810, Special Use Permit.

(2) Administrative Permits. A hearing examiner appointed pursuant to Subsection (b) (1) (ii) is empowered to conduct a public hearing and make a decision on an administrative permit application submitted in accordance with the provisions of Article 808, Administrative Permit.

(f) Compensation. A hearing examiner appointed pursuant to Subsection (b) (1) (i) shall be compensated at a rate of $80.00 per meeting and shall receive compensation for reasonable travel expenses and subsistence allowances made necessary in the fulfillment of his or her official duties.

(g) Meetings and Records.

(1) A meeting shall be held by a hearing examiner appointed pursuant to Subsection (b) (1) (i) within sixty-five (65) days from the date of submittal of an application to review and act upon variance applications submitted in accordance with Article 804, Variances, and special use permit applications submitted in accordance with Article 810, Special Use Permit.

(2) Rules for the transaction of business by a hearing examiner shall be adopted by the Board of County Commissioners.

(3) Complete records of official actions by a hearing examiner shall be kept on file in the office of the Department of Community Development, such records to be a public record.

[Added by Ord. 959, provisions eff. 7/26/96. Amended by Ord. 1234, provisions eff. 05/21/04.]

Section 110.912.20 Appeals to the Board of County Commissioners of a Decision by the Board of Adjustment, the Planning Commission, Hearing Examiner or Other Deciding Body. Except as specifically provided elsewhere in the County Code (such as appeals of master plan decisions by the Planning Commission), this section applies to appeals of decisions of the Planning Commission, the Board of Adjustment, a hearing examiner, or other deciding body.

(a) Time for appeal; form, fees, stay of decision.

(1) A person aggrieved by a decision of the Board of Adjustment, the Planning Commission, a Hearing Examiner, or an administrative enforcement official or a hearing officer following the provisions of Article 910 of the Development Code whose decision is not otherwise appealable (the “deciding body”) may appeal the decision to the Board of County Commissioners.

(2) The appeal must be in writing and delivered to the Planning and Development Division within 10 calendar days from the date that the

decision being appealed is reduced to writing and is filed with the secretary to the deciding body (for hearing examiner decisions the decision is to be filed with the Director of the Planning and Development Division), and mailed to the original applicant in the proceeding being appealed.

(3) When the written appeal is filed and fees paid, it operates to stay the implementation of the decision being appealed, even if the appeal is incomplete upon initial submission. The application must be completed as provided for in subsection (4) below.

(4) The Division may follow up to require the appeal to be on certain forms and/or to obtain more information. The appellant must submit the forms or supply the additional information within 14 business days after written notification by the Division. Failure to do so within this time frame invalidates the appeal submission. The appellant must submit a new appeal containing the original material, and the additional information requested, within 14 business days of written notice that the original application was incomplete. When the Division deems the appeal complete and the fees have been paid, it shall process the appeal as provided herein.

(5) Fees for the appeal are authorized by NRS 278.3195(2)(g) and may be set by resolution of the Board of County Commissioners.

(b) Scheduling of Hearing; notice.

(1) Scheduling a hearing. Under NRS 278.3195(2)(d)(2), a decision must be rendered on the appeal within 60 days from when the Division deems the appeal to be complete, and the County Clerk shall schedule a public hearing on the appeal accordingly.

(2) Notice. Notice for the public hearing before the Board of County Commissioners shall be the same as the required notice set out in the Development Code for the proceeding being appealed. For example, if there is an appeal of a decision to deny a special use permit, then notice for the appeal hearing shall be the same as in WCC Section 110.804.20 for the underlying special use permit. Other than notice to the appellant, notice is not required for the appeal of administrative enforcement decisions that are affirmed or denied by the appellate body.

(3) Panels. The Board of County Commissioners may appoint two or more of its members to serve as a panel to hear the appeal and render a decision that would be binding on the Board of County Commissioners. Each appointment shall select which commissioner is to preside over the proceeding, include instructions as to voting rights and requirements, indicate whether or not decisions of the panel may be appealed to the whole Board of County Commissioners, and include any other procedural matters deemed important to the Board of County Commissioners.

(4) Record on Appeal; Prehearing Procedures.

(i) At least 20 days before the hearing, the Division shall prepare a record on appeal including the written appeal, the written decision or action order being appealed, draft minutes or recording of the proceeding leading to the decision being appealed, the staff report and all materials submitted to the deciding body in connection with the hearing. The original shall be filed with the County Manager's Office and a copy shall be provided to the appellant for use and reference at the hearing before the Board of County Commissioners.

(ii) The Chairman of the Board of County Commissioners or the presiding officer of the panel may:

(1) Issue subpoenas compelling witnesses to appear at the hearing;

(2) Require and oversee prehearing procedural matters, including prehearing conferences, discovery proceedings, briefing schedules, and evidence assembly and marking; and

(3) Agree to stipulated continuances or other scheduling matters.

(5) Hearing procedures; evidence. At the hearing, the Board of County Commissioners:

(i) May consider the matter de novo or as an appeal limited to determining if the deciding body abused its discretion;

(ii) Shall afford all parties an opportunity to respond and present relevant and non-repetitious evidence and arguments on all issues being decided on appeal (even if it is new evidence);

(ii) Shall hear public comment on the matter being heard; and

(iv) Shall view the record on appeal and all evidence, testimony, documents, information and arguments introduced at the hearing.

(6) Burden of persuasion; standards of review and final decision by Board; judicial review of Board's decision.

(i) Burden of Persuasion. Decisions of the Board of Adjustment, Planning Commission or Hearing Examiner, or an administrative enforcement official or a hearing officer are presumed to be reasonable and lawful, and it is the burden of the appellant to persuade the Board of County Commissioners otherwise.

(ii) Findings. On appeal, the Board of County Commissioners may review the findings made by the deciding body and may affirm, reverse, modify or apply a different interpretation to any finding.

Unless otherwise required by a specific provision in statute or code relating to the type of matter being appealed, the Board of County Commissioners is not required to make specific findings.

(iii) Guiding Policy. In reviewing the decision, the Board of County Commissioners shall be guided by the statement of purpose underlying the regulation of improvement of land expressed in NRS 278.020 [NRS 278.3195(2)(f)].

(iv) Possible actions; vote required. On a majority vote of all its members, the Board of County Commissioners may affirm, reverse, or modify the decision of the deciding body. If the decision being appealed is the denial of a building permit, special use permit, variance, master plan amendment, regulatory zoning amendment, or other entitlement, the Board of County Commissioners may either remand the matter back to the deciding body with instructions or may directly grant the building permit, special use permit, variance or other entitlement if properly agendized under the open meeting law and subject to NRS 278.220 for master plan amendments.

(v) Memorandum of Decision. A memorandum of decision shall be prepared by and filed with the County Clerk and mailed to the appellant, and when filed and mailed, the decision of the Board of County Commissioners is final for purposes of judicial review.

(vi) Judicial Review of BCC Decision. A person aggrieved by the decision of the Board of County Commissioners may file a petition for judicial review within 25 days of the filing of the Memorandum of Decision with the County Clerk.

[Added by Ord. 1555, provisions eff. 5/8/15]

Article 914
ESTABLISHMENT OF DIVISION

Sections:

110.914.00	**Purpose**
110.914.05	**Planning and Development Division of the Washoe County Community Services Department**

Section 110.914.00 Purpose. The purpose of this article, Article 914, Establishment of Division, is to specify the establishment and authority of the Planning and Development Division of the Washoe County Community Services Department.

[Amended by Ord. 1555, provisions eff. 5/8/15]

Section 110.914.05 Planning and Development Division of the Washoe County Community Services Department.

(a) Division Created.

(1) There is hereby created the Planning and Development Division of the Washoe County Community Services Department.

(2) The division shall be responsible for the development and administration of comprehensive planning programs, as well as development review programs, including business licensing and codes compliance, for the County in accordance with relevant local, state and federal ordinances, laws and regulations, as well as such other functions as may be assigned by the Board of County Commissioners.

(b) Director's Position Created.

(1) The position of the Division Director Planning and Development is hereby created. The Director shall be appointed by the Community Services Department Director and shall serve at the pleasure of the Community Services Department Director.

(2) The Director shall appoint, pursuant to any applicable provisions of law regulating County personnel, such technical, clerical and operating staff as the execution of the duties of the Director and operation of the department may require.

(c) Director's Powers and Duties. As the executive head of the division, the Director shall direct and supervise all administrative, technical and operational activities of the division. In addition to such activities as may be required in the daily administration of the division, the Community Services Department Director may make additional assignments as deemed necessary. The Director shall have the authority to interpret and make decisions regarding the provisions of the Development Code.

(d) Compensation.

(1) Except as provided in Subsection (d)(2) of this section, the salaries and other fringe benefits of the Director and employees of the Planning and Development Division shall be established in accordance with the provisions of the Merit Personnel Ordinance or any other applicable laws regulating the employment of County personnel.

(2) The salary for the position of Director shall be established by the Board of County Commissioners.

(e) Programs. The division shall consist of such programs, as are deemed necessary to the efficient performance of the duties of the division, created upon the recommendation of the Director and approved by the Community Services Department Director.

(f) Appeal of a Director's Decision. A person aggrieved by a decision of the Director may appeal the decision in accordance with Section 110.912.10 of the Development Code.

[Amended by Ord. 1156, provisions eff. 3/22/02; Ord. 1234, provisions eff. 5/21/04; Ord. 1555, provisions eff. 5/8/15.]

Article 916
ESTABLISHMENT OF COMMITTEES

[This Article amended in its entirety by Ord. 873, provisions eff. 6/7/93; Ord. 1088, provisions eff. 1/28/00.]

Sections:

110.916.00	**Purpose**
110.916.05	**Parcel Map Review Committee**
110.916.10	**Design Review Committee**

Section 110.916.00 Purpose. The purpose of this article, Article 916, Establishment of Committees, is to specify the establishment of a Parcel Map Review Committee and a Design Review Committee.

Section 110.916.05 Parcel Map Review Committee.

(a) Committee Created. A Parcel Map Review Committee is created as a subcommittee of the Planning Commission.

(b) Committee Membership. The Parcel Map Review Committee shall consist of a member of seven members to include the Planning Commission, a member from the staff of the Department of Community Development, County Engineer's Office, District Health Department, Utility Services Division, the Washoe County Fire Services Coordinator, and either the Reno Fire Department, on behalf of the Truckee Meadows Fire Protection District or the Sierra Fire Protection District depending on the location of the proposed project.

(c) Committee Chairman. The Chair of the Committee shall be the staff member from the Department of Community Development.

[This Section amended by Ord. 959, provisions eff. 7/26/96; Ord.1387, provisions eff. 11/20/08.]

Section 110.916.10 Design Review Committee.

(a) Committee Created. There is hereby created a Design Review Committee.

(b) Committee Membership. The Chair of the Planning Commission shall appoint one (1) person to represent the Planning Commission who shall be a member of the Planning Commission, a former member of the Planning Commission or a designee of the Planning Commission; one (1) member representing the planning profession; one (1) member representing the landscape architecture profession; and one (1) member representing the architecture profession. In addition, the Board of Adjustment will appoint one (1) of its members to the committee, a former member of the Board of Adjustment, or a designee of the Board of Adjustment.

(c) Terms. Terms of the three (3) members representing the planning, landscape architects, and architecture professions shall be four (4) years with the ability of a current member to be re-appointed for a second consecutive four (4) year term at the conclusion of his first term. Members are limited to eight (8) consecutive years on the committee.

(d) Meetings. The Design Review Committee shall meet on an as need basis.

[This Section amended by Ord. 959, provisions eff. 7/26/96; Ord. 1288, provisions eff. 3/24/06.]

Article 918
ADOPTION OF DEVELOPMENT CODE

Sections:

110.918.00	**Purpose**
110.918.05	**Adoption of Development Code**
110.918.10	**Purpose of Development Code**
110.918.15	**Interpretation of Development Code**
110.918.20	**Relationship to Other Restrictions**

Section 110.918.00 Purpose. The purpose of this article, Article 918, Adoption of Development Code, is to provide for the adoption of this Development Code as Chapter 110 of the Washoe County Code.

Section 110.918.05 Adoption of Development Code. Chapter 110 of the Washoe County Codes shall be known as the Washoe County Development Code and is adopted pursuant to NRS Chapter 278 and other applicable state statutes.

Section 110.918.10 Purpose of Development Code. There is hereby established a Development Code for Washoe County to:

(a) Promote the public health, safety, morals, convenience and general welfare;

(b) Lessen traffic congestion in the streets;

(c) Provide light and air for all buildings;

(d) Avoid undesirable concentrations of population;

(e) Prevent overcrowding of land and to facilitate adequate provision of transportation, water, sewage, schools, parks and other requirements;

(f) Provide for the division of land; and

(g) Promote the economic and social advantages gained from an appropriately regulated use of land resources.

Section 110.918.15 Interpretation of Development Code. In interpretation and application, the provisions of the Development Code shall be held to be minimum provisions only for the promotion of the health, safety, morals, convenience, property and general welfare of the public.

Section 110.918.20 Relationship to Other Restrictions. It is not intended that the Development Code repeal or in any way interfere with existing laws or ordinances, regulations or permits other than those relating to land use and the construction and use of structures. When the Development Code imposes a greater restriction upon the use of land, or upon height, bulk, location or use of buildings than is required by existing provisions of law or by private covenant or other restriction, the provisions of the Development Code shall prevail. Private covenants or deed restrictions may be recorded which impose more restrictive conditions than contained in the

Development Code. These private covenants or deed restrictions shall not be enforced by Washoe County except when the County is made a party to the covenant or deed restriction.

Article 920
DEFINITIONS FOR FLOODPLAIN MANAGEMENT

Sections:

110.920.00	**Purpose**
110.920.05	**Applicability**
110.920.10	**Rules of Interpretation**
110.920.15	**General Definitions for Floodplain Management**

Section 110.920.00 Purpose. The purpose of this article, Article 920, Definitions for Floodplain Management, is to comply with regulations of the Federal Emergency Management Agency (FEMA) and to promote consistency and precision in the interpretation of the Development Code in matters of floodplain management.

[Added by Ord. 1356, provisions eff. 12/21/07.]

Section 110.920.05 Applicability. The meaning and construction of words and phrases set forth in this article shall apply whenever the context concerns floodplain management. Definitions contained in Article 902 and in the adopted version of the International Building Code shall be applicable except when in conflict with definitions of this article, in which case this article shall control.

[Added by Ord. 1356, provisions eff. 12/21/07.]

Section 110.920.10 Rules of Interpretation. The general rules of interpretation stared in Article 902 shall apply to this article.

[Added by Ord. 1356, provisions eff. 12/21/07.]

Section 110.920.15 General Definitions for Floodplain Management. Unless otherwise specified, the following definitions shall be applicable for floodplain management purposes:

Basement. "Basement" means any area of the building having its floor subgrade (below ground level) on all sides.

Existing Fabricated Home Park or Subdivision. "Existing fabricated home park or subdivision" means a fabricated home park or subdivision for which the construction of facilities for servicing the lots on which the fabricated homes are to be affixed (including, at a minimum, the installation of utilities, the construction of streets, and either final site grading or the pouring of concrete pads) is completed before the effective date (August 1, 1984) of the floodplain management regulations adopted by Washoe County.

Expansion of an Existing Fabricated Home Park or Subdivision. "Expansion of an existing fabricated home park or subdivision" means the preparation of additional sites by the construction of facilities for servicing the lots on which the fabricated homes are to be affixed (including the

installation of utilities, the construction of streets, and either final site grading or the pouring of concrete pads.

Fabricated Home Park or Subdivision. "Fabricated home park or subdivision" means a parcel (or contiguous parcels) of land divided into two or more fabricated home lots for rent or sale.

Fabricated Home Park Site. "Fabricated home park site" is the entire tract of land used for a fabricated home park.

Fabricated Home Space. "Fabricated home space" is the area in a fabricated home park that is rented or leased to the occupant or occupants of a fabricated home.

Highest Adjacent Grade. "Highest adjacent grade" means the highest natural elevation of the ground surface next to the proposed walls of a structure prior to construction.

Lowest Floor. "Lowest floor" means the lowest floor of the lowest enclosed area (including basement). An unfinished or flood resistant enclosure (usable solely for parking of vehicles, building access or storage) in an area other than a basement area is not considered a building's lowest floor, provided that such enclosure is not built so as to render the structure in violation of the applicable non-elevation design requirements.

Manufactured Home. "Manufactured home" is a structure, transportable in one or more sections, which is built on a permanent chassis and is designed for use with or without a permanent foundation when attached to the required utilities. The term "manufactured home" does not include a "recreational vehicle".

New Construction. "New construction" means, for the purposes of determining insurance rates, structures for which the "start of construction" commenced on or after the effective date of the initial Flood Insurance Rate Map (FIRM) or August 1, 1984, whichever is later, and includes any subsequent improvements to such structures. For floodplain management purposes, "new construction" means structures for which the "start of construction" commenced on or after the effective date of the floodplain management regulation adopted by Washoe County (August 1, 1984) and includes any subsequent improvements to such structures.

New Fabricated Home Park or Subdivision. "New fabricated home park or subdivision" means a fabricated home park or subdivision for which the construction of facilities for servicing the lots on which the fabricated homes are to be affixed (including at a minimum, the installation of utilities, the construction of streets, and either final site grading or the pouring of concrete pads) is completed on or after the effective date of floodplain management regulations adopted by Washoe County (August 1, 1984).

Recreational Vehicle. "Recreational vehicle" is a vehicle which is:

(1) Build on a single chassis;

(2) Four hundred (400) feet or less when measured at the largest horizontal projection;

(3) Designed to be self-propelled or permanently towable by a light duty truck; and

(4) Designed primarily not for use as a permanent dwelling but as temporary living quarters for recreational, camping, travel or seasonal use.

Special Flood Hazard Area. "Special flood hazard area" is the land in the floodplain within a community subject to a one (1) percent or greater chance of flooding in any given year. The area may be designated as Zone A on the Flood Hazard Boundary Map (FHBM). After detailed ratemaking has been completed in preparation for publication of the flood insurance rate map, Zone A usually is refined into Zones A, AO, AH, A1-30, AE, A99, AR, AR/A1-30, AR/AE, AR/AO, AR/AH, AR/A, VO, or V1-30, VE, or V. For purposes of these regulations, the term "special flood hazard area" is synonymous in meaning with the phrase "area of special flood hazard".

Start of Construction. "Start of construction" includes substantial improvement, and means the date the building permit was issued provided the actual start of construction, repair, reconstruction, rehabilitation, addition placement, or other improvement was within one hundred eighty (180) days of the permit date. The actual start means either the first placement of permanent construction of a structure on a site, such as the pouring of slab or footings, the installation of pipes, the construction of columns, or any work beyond the stage of excavation; or the placement of a fabricated home on a foundation. Permanent construction does not include land preparation, such as clearing, grading and filling; nor does it include the installation of streets and/or walkways; nor does it include excavation for a basement, footings, piers, or foundations or the erection of temporary forms; nor does it include the installation on the property of accessory buildings, such as garages or sheds not occupied as dwelling units or not part of the main structure. For a substantial improvement, the actual start of construction means the first alteration of any wall, ceiling, floor, or other structural part of a building, whether or not that alteration affects the external dimensions of the building.

Structure. "Structure" means a walled and roofed building, including a gas or liquid storage tank, that is principally above ground, as well as a fabricated home.

Substantial Damage. "Substantial damage" means damage of any origin sustained by a structure whereby the cost of restoring the structure to its before damaged condition would equal or exceed fifty (50) percent of the market value of the structure before the damage occurred.

Substantial Improvement. "Substantial improvement" means any reconstruction, rehabilitation, addition, or improvement of a structure, the cost of which equals or exceeds fifty (50) percent of the market value of the structure before the "start of construction" of the improvement. This term includes structures which have incurred "substantial damage", regardless of the actual repair work performed. The term does not, however, include either:

(1) Any project or improvement of a structure to correct existing violations of state or local health, sanitary, or safety code specifications which have been identified by the local code enforcement official and which are the minimum necessary to assure safe living conditions; or

(2) Any alteration of a "historical structure" provided that the alteration will not preclude the structure's continued designation as a "historic structure".

Violation. "Violation" means, for floodplain management purposes, the failure of a structure or other development to be fully compliant with Washoe County's floodplain management regulations. A structure or other development without the elevation certificate, other certifications, or other evidence of compliance required in Article 416 is presumed to be in violation until such time as that document is provided.

[Added by Ord. 1356, provisions eff. 12/21/07.]

INDEX

	Article
Accessory Uses and Structures	Article 306
Adequate Public Facilities Management System	Article 702
Adequate Public Facilities: Sanitary Sewer	Article 704
Administrative Permits	Article 808
Adoption of Development Code	Article 918
Affordable Housing Incentives (Reserved for Future Ordinance)	Article 336
Aggregate Facilities	Article 332
Allowed Uses	Article 302
Alternative Energy Development Incentives (Reserved for Future Ordinance)	Article 428
Amendment of Development Code	Article 818
Amendment of Map	Article 616
Amendment of Master Plan	Article 820
Amendment of Regulatory Zone	Article 821
Area Plan General Regulations	Article 202
Area Plan Regulations: Title and Contents	Article 200
Bed and Breakfast Establishments	Article 320
Billboard Regulations	Article 502
Boundary Line Adjustment	Article 618
Building Placement Standards	Article 406
Child Daycare Development Incentives (Reserved for Future Ordinance)	Article 338
Common Open Space Development	Article 408
Communication Facilities	Article 324
County Growth Management System	Article 104
Definitions	Article 902
Definitions for Floodplain Management	Article 920
Density/Intensity Standards	Article 402
Design Requirements	Article 604
Development Agreements	Article 814
Development Standards: Title and Contents	Article 400
Division of Land into Large Parcels	Article 612
Domestic Pets and Livestock	Article 330

Article

Enforcement ..... Article 910

Establishment of Commissions, Boards and Hearing Examiners ..... Article 912

Establishment of Committees ..... Article 916

Establishment of Departments ..... Article 914

Fabricated Housing ..... Article 312

Fees ..... Article 906

Figure 110.212.10.1: Typical Setback at Existing Residence ..... Article 212

Figure 110.410.15.1: Motorcycle Parking Dimensions ..... Article 410

Figure 110.410.15.2: Bicycle Parking Dimensions ..... Article 410

Figure 110.410.15.3: Handicapped Parking Dimensions ..... Article 410

Figure 110.410.15.4: International Symbol of Accessibility ..... Article 410

Figure 110.410.15.5: Accessible Routes ..... Article 410

Figure 110.410.25.1: Parking Lot Layout ..... Article 410

Figure 110.412.25.1: Total Developed Land Area ..... Article 412

Figure 110.412.30.1: Intersection Visibility ..... Article 412

Figure 110.412.40.1: Landscaping and Screening for Civic, Commercial, Industrial and Agricultural Use Types ..... Article 412

Figure 110.412.50.1: Required Trees within Parking and Loading Areas ..... Article 412

Figure 110.412.50.2: Landscaping and Screening for Parking and Loading Areas ..... Article 412

Figure 110.412.55.1: Placement and Measurement Techniques for Screening Material ..... Article 412

Figure 110.416.57.1: Exempted Parcels in Critical Flood Zone 1 ..... Article 416

Figure 110.416.57.2: Exempted Parcels in Critical Flood Zone 1 ..... Article 416

Figure 110.416.57.3: Exempted Parcels in Critical Flood Zone 1 ..... Article 416

Figure 110.424.30.1: Building Location Standards ..... Article 424

Figure 110.424.30.2: Example of Split Pad and Stepped Foundation Design ..... Article 424

Figure 110.424.30.3: Slope Ownership ..... Article 424

Figure 110.424.30.4: Building Locations Standards ..... Article 424

Figure 110.434.25.1: Parcel Size Matching ..... Article 434

Figure 110.434.25.2: Buffering ..... Article 434

Figure 110.438.25.BW: Bench Width ..... Article 438

Figure 110.438.25.RWH: Retaining Wall Height ..... Article 438

Figure 110.438.25.TW: Terrace Width ..... Article 438

Figure 110.438.45.1: Grading ..... Article 438

Figure 110.438.45.2: Slope Intersection ..... Article 438

Article

Figure 110.438.45.3: Slope Intersection ..... Article 438

Figure 110.438.60.TOCS: Top of Cut Slope ..... Article 438

Figure 110.438.60.TOFS: Toe of Fill Slope ..... Article 438

Figure 110.902.15.BH1: Determination of Building Height in Feet ..... Article 902

Figure 110.902.15.LW1: Distance Between Side Lot Lines ..... Article 902

Figure 110.902.15.LW2: Distance Between Midpoints ..... Article 902

Figure 110.902.15.LW3: Area/Average Width ..... Article 902

Final Subdivision Maps ..... Article 610

Flood Hazards ..... Article 416

Forest Area ..... Article 204

General Provisions: Title and Contents ..... Article 900

General Subdivision Provisions ..... Article 602

Geothermal Resources ..... Article 328

Grading Standards ..... Article 438

Group Care Facilities ..... Article 322

High Desert Area ..... Article 206

Hillside Development ..... Article 424

Home Occupations ..... Article 308

Impact Fees ..... Article 706

Industrial Performance Standards ..... Article 340

Infrastructure Availability and Financing: Title and Contents ..... Article 700

Interpretation 93-4: Distinction of Nonconforming and Illegal Use Types, and Ability to Bring into Conformance ..... Interpretations

Interpretation 94-1: Prohibition of Manufactured or Mobile Homes Used for Non-Residential Accessory Uses..... Interpretations

Interpretation 94-4: Adjustment of Boundaries for General Rural (GR) Regulatory Zones on Adopted Area Plan Maps ..... Interpretations

Interpretation 94-6: Visibility of Storage of Inoperable Vehicles ..... Interpretations

Interpretation 94-7: Residential Densities in General Rural (GR) Regulatory Zones ..... Interpretations

Interpretation 94-8: Replacement of Nonconforming Manufactured or Mobile Homes ..... Interpretations

Interpretation 96-1: Length of Stay of Recreational Vehicles in Parks ..... Interpretations

Interpretation 96-2: Conformance of Final Subdivision Map with Approved Tentative Subdivision Map ..... Interpretations

Interpretation 96-3: Use of Transition Process after Adoption of Specific Plans and Community Plans ..... Interpretations

Article

Interpretation 96-4: Location of Detached Accessory Structures and Garages .... Interpretations

Interpretation 96-6: Definition of Utility Service ..... Interpretations

Interpretation 96-7: Issuance of Special Use Permits ..... Interpretations

Interpretation 99-1: Applicability of Height Limits to Retaining Walls ..... Interpretations

Interpretation 03-2: Division of GR Parcels when a Significant Hydrologic Resource Exists ..... Interpretations

Interpretation 03-3: Application of RV Park Standards to all Commercial Campground Facilities ..... Interpretations

Interpretation 04-1: Application of Parking and Landscaping Standards to Existing Commercial Development ..... Interpretations

Interpretation 04-2: Boundary Line Adjustments in the General Rural Regulatory Zone ..... Interpretations

Interpretation 04-3: Construction of Fences on Internal Lots ..... Interpretations

Interpretation 04-4: Requirements to Establish Agricultural Buildings as a Main Use and Limitations on Structures ..... Interpretations

Interpretation 06-1: Determining Whether Fractional Lot Remainders May Be Rounded Up to Next Whole Number ..... Interpretations

Interpretation 09-1: Construction of Fences Adjacent to Emergency Access Easements and Cul-de-sacs ..... Interpretations

Interpretation 11-1: Farrier Training Facility, Use Classification ..... Interpretations

Interpretation 11-3: Classification of Temporary Outdoor Entertainment Uses ..... Interpretations

Interpretation 12-1: Accessory Structures in General Rural, Lot Coverage and Size Limits ..... Interpretations

Interpretation 13-1: Extension of Master Plan and Regulatory Zones into Public Right-of-Way ..... Interpretations

Interpretation 13-2: Interim Zoning for Properties Rolled Back from a City's SOI ..... Interpretations

Interpretation 14-1: Driveways to a Permitted Residence Located in a Sensitive Stream Zone Buffer Area ..... Interpretations

Interpretation 14-2: Perodic Review of Conditions for Aggregate Facilities ..... Interpretations

Introduction and Organization: Title and Contents ..... Article 100

Issuance of Permits and Licenses ..... Article 908

Landscaping ..... Article 412

Lot Standards ..... Article 404

Manufactured Home Parks ..... Article 314

Map 110.210.05.1: South Valleys Area Plan and Hydrobasins ..... Article 210

Map 110.212.10.1: Hidden Valley Community Area Modifiers Location Map ..... Article 212

Map 110.222.15.1: Wadsworth Community Area Modifier Location Map ..... Article 222

Map 110.418.05.1: Significant Hydrologic Resources ..... Article 418

Map 110.706.10.1: Southeast Truckee Meadows Specific Plan Impact Fee Service Area ..... Article 706

Article

Map 110.706.10.2: Southeast Truckee Meadows Specific Plan Impact Fee Detention Basins ..... Article 706

Master Plan Categories and Regulatory Zones ..... Article 106

Mining ..... Article 334

Noise and Lighting Standards ..... Article 414

Nonconformance ..... Article 904

North Valleys Area ..... Article 208

Open Space Standards ..... Article 432

Parcel Maps ..... Article 606

Parking and Loading ..... Article 410

Procedures: Title and Contents ..... Article 800

Projects of Regional Significance ..... Article 812

Provisions for Amendments to Local Master Plans and Zone Changes in Areas Subject to Cooperative Planning Under the Regional Plan Settlement Agreement ..... Article 822

Public School Facilities Design Standards ..... Article 440

Recreational Vehicle Parks ..... Article 316

Regional Development Standards within Cooperative Planning Areas and all of Washoe County ..... Article 434

Regulation of Uses: Title and Contents ..... Article 300

Reversion to Acreage ..... Article 614

River Corridor Development (Reserved for Future Ordinance) ..... Article 430

Scenic Area (Reserved for Future Ordinance) ..... Article 426

Significant Hydrologic Resources ..... Article 418

Sign Regulations ..... Article 504

Signs: Title and Contents ..... Article 500

South Valleys Area ..... Article 210

Southeast Truckee Meadows Area ..... Article 212

Southwest Truckee Meadows Area ..... Article 214

Spanish Springs Area ..... Article 216

Special Use Permits ..... Article 810

State and Regional Regulatory System ..... Article 102

Storm Drainage Standards ..... Article 420

Street Design Standards ..... Article 436

Subdivision Regulations: Title and Contents ..... Article 600

Sun Valley Area ..... Article 218

Table 110.106.05.1: Table of Master Plan Categories and Allowed Regulatory Zones ..... Article 106

Article

Table 110.106.30.1: Table of Comparable Regulatory Zones and Pre-1993 Zoning Ordinance Districts ..... Article 106

Table 110.302.05.1: Table of Uses (Residential Use Types) ..... Article 302

Table 110.302.05.2: Table of Uses (Civic Use Types) ..... Article 302

Table 110.302.05.3: Table of Uses (Commercial Use Types) ..... Article 302

Table 110.302.05.4: Table of Uses (Industrial Use Types) ..... Article 302

Table 110.302.05.5: Table of Uses (Agricultural Use Types) ..... Article 302

Table 110.324.50.1: Antenna Placement Standards ..... Article 324

Table 110.324.55.1: Significant Gap Antenna Pole Height ..... Article 324

Table 110.406.05.1: Standards ..... Article 406

Table 110.410.10.1: Off-Street Parking Space Requirements (Residential Use Types) ..... Article 410

Table 110.410.10.2: Off-Street Parking Space Requirements (Civic Use Types) ..... Article 410

Table 110.410.10.3: Off-Street Parking Space Requirements (Commercial Use Types) ..... Article 410

Table 110.410.10.4: Off-Street Parking Space Requirements (Industrial Use Types) ..... Article 410

Table 110.410.10.5: Off-Street Parking Space Requirements (Agricultural Use Types) ..... Article 410

Table 110.410.15.1: Handicapped Accessible Spaces ..... Article 410

Table 110.410.25.1: Parking Dimensions ..... Article 410

Table 110.436.25.1: Roadway Sections - A, General Applications: Arterial Highways ..... Article 436

Table 110.436.25.2: Roadway Sections - B, General Applications: Streets Serving Lot Sizes Less Than 0.5 Acres ..... Article 436

Table 110.436.25.3: Roadway Sections - C, General Applications: Streets Serving Lot Sizes 0.5 - 1.5 Acres ..... Article 436

Table 110.436.25.4: Roadway Sections - D, General Applications: Streets Serving Lot Sizes Greater Than 1.5 Acres ..... Article 436

Table 110.436.25.5: Sidewalk Requirements ..... Article 436

Table 110.436.45.1: AASHTO Minimum Design Radius Criteria ..... Article 436

Table 110.438.10.1: Permits Required ..... Article 438

Tahoe Area ..... Article 220

Temporary Uses and Structures ..... Article 310

Tentative Subdivision Maps ..... Article 608
Truckee Canyon Area ..... Article 222
Use Classification System ..... Article 304
Article
Vacation Time Share Units ..... Article 318
Vacations and Abandonments of Easements or Streets ..... Article 806
Variances ..... Article 804
Verdi Area ..... Article 224
Warm Springs Area ..... Article 226
Washoe County Planning Areas (map) ..... Article 202
Water and Sewer Resource Requirements ..... Article 422
Wind Machines ..... Article 326

Interpretations
CONTENTS

	Interpretation
Distinction of Nonconforming and Illegal Use Types, and Ability to Bring into Conformance	93-4
Prohibition of Manufactured or Mobile Homes Used for Non-Residential Accessory Uses	94-1
Adjustment of Boundaries for General Rural (GR) Regulatory Zones on Adopted Area Plan Maps	94-4
Visibility of Storage of Inoperable Vehicles	94-6
Residential Densities in General Rural (GR) Regulatory Zones	94-7
Replacement of Nonconforming Manufactured or Mobile Homes	94-8
Length of Stay of Recreational Vehicles in Parks	96-1
Conformance of Final Subdivision Map with Approved Tentative Subdivision Map	96-2
Use of Transition Process after Adoption of Specific Plans and Community Plans	96-3
Location of Detached Accessory Structures and Garages	96-4
Definition of Utility Service	96-6
Issuance of Special Use Permits	96-7
Applicability of Height Limits to Retaining Walls	99-1
Division of GR Parcels when a Significant Hydrologic Resource Exists	03-2
Application of RV Park Standards to all Commercial Campground Facilities	03-3
Application of Parking and Landscaping Standards to Existing Commercial Development	04-1
Boundary Line Adjustments in the General Rural Regulatory Zone	04-2
Construction of Fences on Internal Lots	04-3
Requirements to Establish Agricultural Buildings as a Main Use and Limitations on Structures	04-4
Determining Whether Fractional Lot Remainders May Be Rounded Up to Next Whole Number	06-1
Construction of Fences Adjacent to Emergency Access Easements and Cul-de-sacs	09-1

Interpretation

Farrier Training Facility, Use Classification 11-1

Classification of Temporary Outdoor Entertainment Uses 11-3

Accessory Structures in General Rural, Lot Coverage and Size Limits 12-1

Extension of Master Plan Classifications and Regulatory Zones into Public Rights-of-Way 13-1

Interim Zoning for Properties Rolled Back from a City's SOI 13-2

Driveways to a Permitted Residence Located in a Sensitive Stream Zone Buffer Area 14-1

Periodic Review of Conditions for Aggregate Facilities 14-2

Interpretation 93-4
DISTINCTION OF NONCONFORMING AND ILLEGAL USE TYPES, AND ABILITY TO BRING INTO CONFORMANCE

Pursuant to Article 910, Section 110.910.05 of Chapter 110 of the Washoe County Code, the Director of the Department of Development Review has the authority to enforce the provisions of the Development Code. In order to appropriately enforce the ordinance, the Director finds it necessary to provide the following definition as to the distinction between nonconforming use types and illegal use types, and the ability to use the Development Code provisions to bring each type of use into conformance with the Development Code regulations. For purposes of this interpretation, nonconforming uses are those types defined in Article 904, Section 110.904.10 (a) through (e): nonconforming lot, nonconforming use of land, nonconforming use of a structure, nonconforming structure, nonconforming development. For purposes of this interpretation, illegal uses are those that cannot be defined as those types defined in Article 904, Section 110.904.10 (a) through (e) because insufficient evidence exists to support a finding of nonconformance.

The provisions of the Development Code may only be used to bring into compliance a nonconforming use: nonconforming lot, nonconforming use of land, nonconforming use of a structure, nonconforming structure, nonconforming development. An illegal use must be removed or ceased, and may not utilize the provisions of the Development Code as an alternative to removal or cessation.

BACKGROUND

Articles 804 (Variances), 808 (Administrative Permits) and 810 (Special Use Permits) all have a section entitled Conformance with Chapter. This section in each article states that "No.....request shall be approved which would have the effect of bringing into conformance a use of land or building that has been established in contravention to the provisions of this chapter." Some confusion has emanated concerning the application of this provision. In order to appropriately enforce the Development Code, the Director of the Department of Development Review has determined that the above referenced section contained in each article shall apply to those uses that are constituted as illegal uses.

Limitations of Interpretation

This interpretation shall supersede all previous interpretations of Chapter 110 of the Washoe County Code concerning the above referenced subject and be in effect unless and until a subsequent interpretation concerning the above referenced subject is made by the Director of the Department of Development Review, the interpretation is reversed through a successful

appeal pursuant to Article 808, or the Washoe County Code is amended to include the subject matter referenced in this interpretation.

Michael A. Harper, AICP, Director
Department of Development Review

Dated: August 26, 1993 (revised July 9, 1996 to remove reference to administrative waivers)

Interpretation 94-1
PROHIBITION OF MANUFACTURED OR MOBILE HOMES USED FOR NON-RESIDENTIAL ACCESSORY USES

Pursuant to Article 910, Section 110.910.05 of Chapter 110 of the Washoe County Code, the Director of the Department of Development Review has the authority to enforce the provisions of the Development Code. In order to appropriately enforce the Development Code, the Director finds it necessary to provide the following interpretation as to the ability to use a manufactured home or a mobile home for non-residential accessory uses. For the purposes of this interpretation, an accessory building is defined in Article 902, Section 110.902.15 Accessory Building, but does not include the terms Attached Accessory Dwelling or Detached Accessory Dwelling. For the purposes of this interpretation, a manufactured home is defined in Article 902, Section 110.902.15 Manufactured Home, and a mobile home is defined in Article 902, Section 110.902.15 Mobile Home.

After May 26, 1993, a manufactured home or a mobile home may not be used for non-residential accessory uses, such as a storage shed, work or play room, shop, etc. This interpretation does not apply to the temporary use of fabricated housing as enumerated in Article 310 of the Development Code.

BACKGROUND

Prior to the adoption of the Development Code, the Board of County Commissioners had interpreted the provisions of the previous zoning ordinance to limit the use of manufactured homes and mobile homes to primary dwelling uses and guest houses. This interpretation perpetuates the previous action of the Washoe County Board of County Commissioners.

Limitations of Interpretation

This interpretation shall supersede all previous interpretations of Chapter 110 of the Washoe County Code concerning the above referenced subject and be in effect unless and until a subsequent interpretation concerning the above referenced subject is made by the Director of the Department of Development Review, the interpretation is reversed through a successful appeal pursuant to Article 808, or the Washoe County Code is amended to include the subject matter referenced in this interpretation.

Michael A. Harper, AICP, Director
Department of Development Review

Dated: January 26, 1994

Interpretation 94-4
ADJUSTMENT OF BOUNDARIES FOR GENERAL RURAL (GR) REGULATORY ZONES ON ADOPTED AREA PLAN MAPS

Pursuant to Article 910, Section 110.910.05 of Chapter 110 of the Washoe County Code, the Director of the Department of Development Review has the authority to enforce the provisions of the Development Code. In order to appropriately enforce the Development Code, the Director finds it necessary to provide the following interpretation as to the ability to adjust the boundaries of General Rural (GR) Regulatory Zones shown on adopted area plan maps without the need for a Comprehensive Plan amendment when new data supports the adjustment of the boundary.

When new data is submitted, verified, and accepted by both the Washoe County Department of Comprehensive Planning and the Washoe County Department of Development Review that shows that the boundaries of a General Rural (GR) Regulatory Zone as shown on an adopted area plan map incorrectly represent the boundaries of a floodplain, potential wetlands or slope (Section 110.106.110 General Rural Regulatory Zone, (a) Floodplains, (b) Potential Wetlands and (c) Slopes), then the new boundaries shall be adjusted on the official regulatory zone map(s) [area plan map(s)] as soon as possible and said adjustment shall not require a Comprehensive Plan amendment. When new data is submitted, a portion of it shall be on a map that provides for easy integration with the County's land use mapping system. Until the regulatory zone map(s) can be changed, the information that supported the adjustment shall be used to determine development potential for the affected property(ies).

BACKGROUND

The description of the General Rural (GR) Regulatory Zone contained in the Development Code (Section 110.106.110) enumerates five (5) circumstances under which the GR Regulatory Zone would be applied to a parcel of property. Three of the circumstances are physical in nature: floodplains, wetlands, slopes. In each physical circumstance, the source of information is identified that is used to apply the GR designation to property. Each of these sources can be refined through further detailed studies. These refined studies may result in an expansion or contraction of the physical attribute that originally determined the boundary of the GR designation. Since the intent of the GR designation is to limit development where floodplains, wetlands or steep slopes exist, it is only appropriate that when further refined studies alter the boundary of the physical limitation, this altered boundary be used to determine the development potential of the affected property. It is also appropriate that the adjustment of the boundary on the affected area plan map occur as soon as possible and not be subject to a lengthy hearing process that will not contribute measurably to the final, physical delineation.

Limitations of Interpretation

This interpretation shall supersede all previous interpretations of Chapter 110 of the Washoe County Code concerning the above referenced subject and be in effect unless and until a subsequent interpretation concerning the above referenced subject is made by the Director of the Department of Development Review, the interpretation is reversed through a successful appeal

pursuant to Article 808, or the Washoe County Code is amended to include the subject matter referenced in this interpretation.

Michael A. Harper, AICP, Director
Department of Development Review

Dated: June 10, 1994

Interpretation 94-6
VISIBILITY OF STORAGE OF INOPERABLE VEHICLES

Pursuant to Article 910, Section 110.910.05 of Chapter 110 of the Washoe County Code, the Director of the Department of Development Review has the authority to enforce the provisions of the Development Code. In order to appropriately enforce the Development Code, the Director finds it necessary to provide the following interpretation as to how the provision in Article 306, Section 110.306.35 Outdoor Storage/Outdoor Display, (a) General Requirements, Storage that states, "No area visible from a street shall be used for outdoor storage of inoperable vehicles" shall be applied.

The above noted provision was intended to permit the outdoor storage of material as long as it did not create a visual blight in the area that it was located. To realistically make the provision effective without eliminating the potential that no outdoor storage could occur, the terms "area visible from a street" shall mean that area visible from a street with which the property has a common property boundary. The "area visible from a street" is that portion of the property that can be seen from any portion of the abutting street, even if the portion of the abutting street is not contiguous to the property line. Further, street is interpreted to mean an access way that is physically used by the public to enter and exit property, but shall not mean a driveway that only serves a single property.

BACKGROUND

When the Development Code was adopted, the Board of County Commissioners expressed a desire to address the storage of unsightly material that affected the visual attractiveness of the community. Amendments to the Development Code prohibited the storage of inoperable vehicles and material that could be seen from the street. This provision was not intended to deny a property owner the right to store material and inoperable vehicles that did not create health hazards, but to encourage these property owners to store the material out of sight of neighbors and the traveling public.

Over the past few months, staff has received requests to enforce this provision of the Development Code that could result in the virtual elimination of any ability to store material and inoperable vehicles on private property. In some instances, neighboring property owners who do not live on the same street as an affected property, but who can look down upon the property from another street, have requested the County to require removal of any material in a back yard, though the yard is screened from the street that the property actually abuts. In other instances, neighbors have attempted to require the implementation of this section of the ordinance if they resided on a flag lot behind another property and could view stored material from the long driveway that accesses their property.

Both examples illustrate the fact that the provision, "no area visible from a street" could be taken to the extreme and prohibit any outdoor storage; a clear contravention to the legislative intent of the code provision. In order to create some balance to the implementation of the code provision, the interpretation provided above limits the effect of outdoor storage to those properties and traveling public that are immediately affected by the storage of material. Therefore, the area visible from a street relates to the street that physically abuts a parcel of property, not a street that

may, by virtue of its topographic location, be above a parcel of property. To insure that all area visible from an abutting street is addressed, the interpretation does not limit the view only from that portion of the street that only abuts a property line of property that is violating the section enumerated above. In addition, private driveways are eliminated as a defined street for the purposes of this provision if the driveway only serves a single lot.

Limitations of Interpretation

This interpretation shall supersede all previous interpretations of Chapter 110 of the Washoe County Code concerning the above referenced subject and be in effect unless and until a subsequent interpretation concerning the above referenced subject is made by the Director of the Department of Development Review, the interpretation is reversed through a successful appeal pursuant to Article 808, or the Washoe County Code is amended to include the subject matter referenced in this interpretation.

Michael A. Harper, AICP, Director
Department of Development Review

Dated: October 6, 1994

Interpretation 94-7
RESIDENTIAL DENSITIES IN GENERAL RURAL (GR) REGULATORY ZONES

Pursuant to Article 910, Section 110.910.05 of Chapter 110 of the Washoe County Code, the Director of the Department of Development Review has the authority to enforce the provisions of the Development Code. In order to appropriately enforce the Development Code, the Director finds it necessary to provide the following interpretation as to the minimum density permitted in a General Rural (GR) Regulatory Zone for residential uses.

Pursuant to Article 406, Table 110.406.05.1, residential uses shall have a maximum density of .025 dwelling units per acre. In order to increase the maximum density through an amendment of the Comprehensive Plan, all of the provisions of Article 106, Section 110.106.110 through 110.106.120 must be satisfactorily addressed.

BACKGROUND

The Development Code has two provisions that appear to conflict with each other concerning residential densities in a General Rural (GR) Regulatory Zone. The descriptions of the regulatory zones are contained in Article 106 and are enforceable provisions of the Development Code. Article 106, Sections 110.106.110 and 110.106.120 suggest that a lot size of forty (40) acres is appropriate for each residential use (no lot size is recommended for any non-residential use). Article 406, Building Placement Standards, contains Table 110.406.05.1, Standards. This table clearly states a maximum dwelling unit (i.e. residential) density of .025 dwelling units per acre. In addition, the minimum lot size for a use in GR is forty (40) acres. What results is a conflict between a direction (Article 106) and a standard (Article 406). This interpretation defines the relationship between these two articles.

Article 406, Building Placement Standards, provides the numerical standards that implement the legislative intent of the Development Code and the Comprehensive Plan. Part One: Density/Intensity Standards and Part Two: Lot Size of Table 110.406.05.1 Standards, specifically identify a dwelling lot size and density for GR regulatory zones. They categorically state and support the intent of Article 106, Sections 110.106.110 through 110.106.120 that recommend 40 acre minimum lot sizes as the appropriate density for residential uses in GR. Although the provisions of Section 110.106.120, General Rural Regulatory Zone Development Guidelines, state that "Higher [residential] density development shall be permitted upon finding that the constraints associated with the above mentioned characteristics can be mitigated", this same provision also requires that "the plan for the area is [to be] amended". This latter part of the statement requires an area plan amendment to another regulatory zone classification that matches the higher proposed density, or a change to the basic Area Plan/Development Code language that would permit varying densities in response to specific circumstances. This latter process would also require a change to Table 110.406.05.1 for internal code consistency. Until a change to Table 110.406.05.1 occurs that amends the standards for lot sizes or density for residential uses in GR, forty (40) acre minimum lot sizes and a density of .025 dwelling units per acre are the standards that must be adhered to for any new development in this regulatory zone.

Notwithstanding, all uses permitted in a GR Regulatory Zone are allowed for any parcel created prior to May 26, 1993 that is zoned GR, even if the parcel is less than forty (40) acres in size.

Limitations of Interpretation

This interpretation shall supersede all previous interpretations of Chapter 110 of the Washoe County Code concerning the above referenced subject and be in effect unless and until a subsequent interpretation concerning the above referenced subject is made by the Director of the Department of Development Review, the interpretation is reversed through a successful appeal pursuant to Article 808, or the Washoe County Code is amended to include the subject matter referenced in this interpretation.

Michael A. Harper, AICP, Director
Department of Development Review

Dated: October 6, 1994

Interpretation 94-8
REPLACEMENT OF NONCONFORMING MANUFACTURED OR MOBILE HOMES

Pursuant to Article 910, Section 110.910.05 of Chapter 110 of the Washoe County Code, the Director of the Department of Development Review has the authority to enforce the provisions of the Development Code. In order to appropriately enforce the Development Code, the Director finds it necessary to provide the following interpretation regarding the replacement of a manufactured or mobile home that may be nonconforming to the use or location of the coach with another manufactured home.

A manufactured or mobile home that is nonconforming with the Development Code due to its use or location may be replaced with another manufactured home (a coach constructed to the U.S. Department of Housing and Urban Development standards) provided that the time limits and size limitations enumerated in Article 904, Nonconformance, and the design standards enumerated in Article 312, Section 110.312.15 are complied with.

BACKGROUND

It has been a common practice in Washoe County to replace an older manufactured or mobile home with a new one when the older coach no longer served the purposes of the user of the land. This practice was commonly accepted even for manufactured and mobile homes that were nonconforming to the use of the land or the permissible location of the coach. The rationale behind the practice was based on a desire to equitably treat manufactured/mobile homeowners in the same manner as owners of site constructed homes.

The Development Code permits the internal remodeling, expansion of up to ten percent (10%), and the customary repair and maintenance of a site built home even if it is nonconforming to the provisions of the code. Structurally, a mobile home does not enjoy the same advantages as a site constructed home when it comes to remodeling, expansion and, in some instances, customary repair and maintenance. Especially in the area of remodeling and/or expansion, the utilization of the nonconforming provisions could result in a coach that would not be structurally able to be inhabited. In order to provide for equitable treatment amongst the variety of housing available in Washoe County, the above interpretation allows the replacement of an existing manufactured or mobile home with another manufactured home as a means of making available to these type of homeowners the same opportunities as those enjoyed by owners of site constructed homes when it comes to nonconformance provisions. In exercising the replacement opportunity, the owner of the manufactured or mobile home to be replaced must be able to meet, with the new coach, the size limitations, location requirements and timeframes enumerated in Article 904. In addition, the design standards for a manufactured home as provided for in Article 312, Section 110.312.15 must be complied with. This latter provision is to provide for conformance with design standards incorporated in the Development Code.

Limitations of Interpretation

This interpretation shall supersede all previous interpretations of Chapter 110 of the Washoe County Code concerning the above referenced subject and be in effect unless and until a subsequent interpretation concerning the above referenced subject is made by the Director of the Department of Development Review, the interpretation is reversed through a successful appeal pursuant to Article 808, or the Washoe County Code is amended to include the subject matter referenced in this interpretation.

Michael A. Harper, AICP, Director
Department of Development Review

Dated: October 6, 1994

Interpretation 96-1
LENGTH OF STAY OF RECREATIONAL VEHICLES IN PARKS

Pursuant to Article 910, Section 110.910.05 of Chapter 110 of the Washoe County Code, the Director of the Department of Development Review has the authority to enforce the provisions of the Development Code. In order to appropriately enforce the Development Code, the Director finds it necessary to provide the following interpretation concerning the length of stay by a recreational vehicle in a recreational vehicle or recreational vehicle/manufactured home park that is a nonconforming use.

A recreational vehicle as defined in Article 902 of the Washoe County Development Code may stay in a recreational vehicle or recreational vehicle/manufactured home park that is determined to be a nonconforming use for an indefinite period of consecutive days. This interpretation is limited to spaces established in the park prior to the implementation of the Development Code on May 26, 1993.

BACKGROUND

Section 110.316.50, Prohibitions, of Article 316, Recreational Vehicle Parks, permits a maximum of sixty (60) continuous days stay in a recreational vehicle park by a recreational vehicle. The only exception is for a caretaker or manager who resides in a recreational vehicle. In January 1996, the Washoe County Board of County Commissioners inquired about the application of this provision for recreational vehicles to recreational vehicle parks or combined recreational vehicle/manufactured home parks that are nonconforming to the provisions of the Development Code. After discussion with the Board of County Commissioners, the Director of the Department of Development Review was requested to consider an interpretation that would address this issue.

Recreational vehicle parks and combined recreational vehicle/manufactured home parks constructed and operated prior to the implementation of the current Development Code did not have a time constraint regarding stay. Given the fact that nonconforming uses are permitted to continue in the same manner as existed prior to a law change, it is appropriate that the sixty (60) consecutive day limitation not be applied for those spaces created in recreational vehicle and recreational vehicle/manufactured home parks that are nonconforming.

Limitations of Interpretation

This interpretation shall supersede all previous interpretations of Chapter 110 of the Washoe County Code concerning the above referenced subject and be in effect unless and until a subsequent interpretation concerning the above referenced subject is made by the Director of the Department of Development Review, the interpretation is reversed through a successful appeal pursuant to Article 808, or the Washoe County Code is amended to include the subject matter referenced in this interpretation.

Michael A. Harper, AICP, Director
Department of Development Review

Dated: January 22, 1996

Interpretation 96-2
CONFORMANCE OF FINAL SUBDIVISION MAP WITH APPROVED TENTATIVE SUBDIVISION MAP

Pursuant to Article 910, Section 110.910.05 of Chapter 110 of the Washoe County Code, the Director of the Department of Development Review has the authority to enforce the provisions of the Development Code. In order to appropriately enforce the Development Code, the Director finds it necessary to provide the following interpretation concerning the limitations that the Director of the Department of Development Review must adhere to when reviewing the conformance of a final subdivision map with an approved tentative subdivision map.

The Director of the Department of Development Review shall adhere to the following when evaluating a final subdivision map to determine if it is in conformance with an approved tentative subdivision map:

- Boundaries of the final map area must be the same as those represented on the approved tentative subdivision map.

- Individual lot sizes and design may be varied up to ten (10) percent for no more than ten (10) percent of the total number of lots shown on the approved tentative subdivision map.

- Access points to the subdivision shown on the final subdivision map must generally be in the same location as those shown on the approved tentative subdivision map, may only be moved one hundred (100) feet from the location shown on the tentative subdivision map and may not create an adverse impact on lots adjacent to the boundaries of the tentative subdivision map.

- The internal street circulation pattern shown on the final map must be similar to that shown on the approved tentative subdivision map [i.e. location of blocks served by the street pattern are similar in design and number of lots (with no more than a ten (10) percent difference in any one block) between the tentative subdivision map and the final subdivision map].

- If the provision of water, sewer, power and cable services at the time of the submittal of the final subdivision map differs in type or location of services from those approved for the tentative subdivision map, the effect of the change shall not result in more than a ten (10) percent change in the location of blocks, or a change of ten (10) percent in the number of lots in any one block.

- A change between the final subdivision map and the approved tentative subdivision map that is necessitated by requirements of a federal, state, regional or local agency after the approval of the tentative subdivision map shall be allowed notwithstanding that the changes may exceed the limitations enumerated above.

- If options are permitted through the approval of a tentative subdivision map, then those options may be exercised through the filing of a final subdivision map without the need for further review.

The aforementioned limitations were acknowledged by the Board of County Commissioners at a workshop held on March 18, 1996 on this subject.

BACKGROUND

During the summer of 1995, the Board of County Commissioners was requested to consider the conformance finding that the Director of the Department of Development Review had made between an approved tentative subdivision map and final subdivision map filed with the department. After the review of the aforementioned final map, the Board of County Commissioners requested the Director of the Department of Development Review to develop a set of guidelines for conformance findings. A set of guidelines for final subdivision maps and a review of the Development Code's guidelines for special use permits and nonconforming uses was developed. These were submitted to the Development Services Advisory Committee in December 1995 for that organization's comments. The original guidelines and the Development Services Advisory Committee's comments were submitted to the Board of County Commissioners and reviewed by that body on March 18, 1996. The Board of County Commissioners commented on the guidelines and acknowledged the guidelines as specified above at their workshop on March 18, 1996. The Director of the Department of Development Review agreed to publish the guidelines as an interpretation.

Limitations of Interpretation

This interpretation shall supersede all previous interpretations of Chapter 110 of the Washoe County Code concerning the above referenced subject and be in effect unless and until a subsequent interpretation concerning the above referenced subject is made by the Director of the Department of Development Review, the interpretation is reversed through a successful appeal pursuant to Article 808, or the Washoe County Code is amended to include the subject matter referenced in this interpretation.

Michael A. Harper, AICP, Director
Department of Development Review

Dated: March 19, 1996

Interpretation 96-3
USE OF TRANSITION PROCESS AFTER ADOPTION OF SPECIFIC PLANS AND COMMUNITY PLANS

Pursuant to Article 910, Section 110.910.05 of Chapter 110 of the Washoe County Code, the Director of the Department of Development Review has the authority to enforce the provisions of the Development Code. In order to appropriately enforce the Development Code, the Director finds it necessary to provide the following interpretation concerning the ability of a property owner to use the transition process, including the zoning established prior to the effectuation of the Development Code, in an area where a specific plan has been adopted by the Board of County Commissioners. This interpretation also includes the community plans adopted in the Tahoe planning area.

A property owner whose property is located within a land use district with a designation of Specific Plan (SP) and whose property is the subject of a specific plan adopted by the Board of County Commissioners pursuant to the provisions of the Development Code is prohibited from using the transition process established under Section 110.106.10 Transition Process.

BACKGROUND

When the Development Code was adopted in December 1992 and became effective on May 26, 1993, the Board of County Commissioners established a transition process to allow for a scheduled move from the zoning established prior to May 26, 1993 to the new regulatory zoning where a difference in use or intensity occurred between the previous zoning and the regulatory zoning. This transition process is only available to property owners whose zoning (pre-May 26, 1993) is different from the regulatory zoning as determined by Table 110.106.10.1, Table of Comparable Land Use and Zoning Designations. All areas identified as Specific Plan (SP) regulatory zoning are considered eligible for the transition process, unless a specific plan has been adopted. When the specific plan has been adopted, the pre-May 26, 1993 zoning can no longer be used in lieu of the specific plan land uses adopted through an approved Board of County Commissioner's plan.

Two citations in the Development Code support the above interpretation.

- Table 110.106.10.1 states under Specific Plan Area that "Any zone if included in an adopted specific plan" is considered to be a comparable zoning ordinance district. Zoning ordinance districts (pre-May 26, 1993 zoning) comparable with Comprehensive Plan Designations are not eligible for the transition process.

- Section 110.106.125 Specific Plan Regulatory Zone states, in part: "The Specific Plan designation shall not be used as the basis for development proposals unless and until the specific plan for the area is approved and adopted by the Washoe County Commission." It is clear that the Board of County Commissioners intended an adopted specific plan to be considered as the new land use (i.e. zoning). Since Table 110.106.10.1 states that an adopted specific plan's zoning is consistent with the SP land use designation, the transition

process is no longer available to the landowner of property whose property is included in the adopted specific plan.

The community plans adopted for the Tahoe planning area are included in this interpretation because they were designated Specific Plan (SP) on the adopted regulatory zoning maps for the Tahoe planning area.

Limitations of Interpretation

This interpretation shall supersede all previous interpretations of Chapter 110 of the Washoe County Code concerning the above referenced subject and be in effect unless and until a subsequent interpretation concerning the above referenced subject is made by the Director of the Department of Development Review, the interpretation is reversed through a successful appeal pursuant to Article 808, or the Washoe County Code is amended to include the subject matter referenced in this interpretation.

Michael A. Harper, AICP, Director
Department of Development Review

Dated: May 7, 1996

Interpretation 96-4
LOCATION OF DETACHED ACCESSORY STRUCTURES AND GARAGES

Pursuant to Article 910, Section 110.910.05 of Chapter 110 of the Washoe County Code, the Director of the Department of Development Review has the authority to enforce the provisions of the Development Code. In order to appropriately enforce the Development Code, the Director finds it necessary to provide the following interpretation concerning the location of detached accessory structures and detached garages.

A detached accessory structure must be located either on the same lot as the main structure, or on a lot that is defined as the same parcel of land that the main structure is or is intended to be located. An exception to the detached accessory structure location interpretation is that detached garages associated with a use may be located on an adjacent parcel of land that is zoned for the same uses as the parcel of land on which the main structure is located.

BACKGROUND

The location of detached accessory structures (which excludes a detached accessory dwelling) and detached garages relative to a main structure is not clearly identified in the Development Code. For example, a detached garage is identified as an example of a detached accessory structure. Yet, when a comparison of the location of detached accessory structures and detached garages relative to the lot that a main building (which is required for both detached uses) occurs, there is a distinction drawn in the Development Code. This interpretation is intended to establish the rule for the location of both types of detached uses.

The definition of a detached accessory structure (110.304.15(3)) states that "A detached accessory structure refers to a building or structure on the same lot as the main residential structure..." Therefore, it is clear from the definition that a detached accessory structure must be located within the same parcel line boundaries as the main structure. The question then is raised whether a detached accessory structure must be within the same boundary lines as a main structure. The answer is no. The reason is found in the definition of Lot (110.902.15). "Lot means a distinct part or *parcel of land* divided with the intent to transfer ownership or for building purposes and which abuts upon a permanent means of access." (*emphasis* added) Parcel of land is defined as "...any unit or *contiguous units of land* in the possession of or recorded as the property of one person." (110.902.15) (*emphasis* added) It is, therefore, possible for a detached accessory structure to be located on land with distinct boundaries separate from the land that the main structure is located, but which is contiguous and is considered as part of a parcel of land on which the main structure is located. The most effective way of determining if a detached accessory building meets the location guidelines is to determine if the main structure and the detached accessory building are located on land with the same parcel number as assigned by the County Assessor's Office.

Although detached garages are defined as an example of a detached accessory structure, separate rules for their location are enumerated in 110.410.20(a). This section states "For dwellings, motels, automobile-oriented services, and elementary, junior high, and high schools, required parking spaces shall be provided on the same lot as the main building(s) or on an adjoining lot or lots zoned for the main use of the property." Unlike the detached accessory

structure's location rules, a detached garage can be located on a separate parcel of land as long as it is adjacent to the main structure's parcel of land and is zoned for the same use as the parcel of land on which the main structure is located.

Limitations of Interpretation

This interpretation shall supersede all previous interpretations of Chapter 110 of the Washoe County Code concerning the above referenced subject and be in effect unless and until a subsequent interpretation concerning the above referenced subject is made by the Director of the Department of Development Review, the interpretation is reversed through a successful appeal pursuant to Article 808, or the Washoe County Code is amended to include the subject matter referenced in this interpretation.

Michael A. Harper, AICP, Director
Department of Development Review

Dated: May 7, 1996

Interpretation 96-6
DEFINITION OF UTILITY SERVICE

Pursuant to Article 304, Section 110.304.10 of Chapter 110 of the Washoe County Code, the Director of the Department of Development Review has the authority to classify uses with respect to the Use Classification System enumerated in Article 304. The following classification is made regarding the definition of utility services. For a utility service that is also classified as a project of regional significance in the Nevada Revised Statutes, Chapter 278, or is defined as a "Utility Project" in Nevada Revised Statutes, Chapter 278, the project of regional significance definition and/or the "Utility Project" definition shall serve as the threshold for requiring a discretionary permit as required by the Development Code.

BACKGROUND

Article 304, Use Classification System, Section 110.304.20, (i) (2) defines a Utility Service as "...the provision of electricity, water or other liquids, or gas, through wires, pipes or ditches through utility services involving major structures that have flexibility in location. Typical uses include natural gas transmission lines and substations, petroleum pipelines, and irrigation water ditches." The Development Code definition does not provide direction as to when the definition should be applied to a utility service. A strict reading of the definition would suggest that any sized pipe for water service or any sized line for electrical service would require a discretionary permit in those land use districts that enumerate the need for such a permit. This could lead to the County requiring a special use permit for every water line and power/cable line leading to every individual house.

The legislative history of the Development Code does not support this micromanaging of utility services. Therefore, some type of threshold is needed to address the intent of regulating utility services. The Nevada Revised Statutes provides a threshold for certain utility uses through its definition of projects of regional significance and through a definition of "Utility Project". Since this is legislative intent for Washoe County at the state level, it is appropriate to utilize the state's project of regional significance definition and the "Utility Project" definition as a threshold for those utility services that are defined in the Nevada Revised Statutes.

The Director of Development Review realizes that not all utility services possible under Section 110.304.20, (i) (2) are defined as projects of regional significance or as a "Utility Project" in Nevada Revised Statutes. For those utility services for which no guidance in the state statutes is provided, staff will continue to determine the applicability of discretionary permits on a case-by-case basis.

Limitations of Interpretation

This interpretation shall supersede all previous interpretations of Chapter 110 of the Washoe County Code concerning the above referenced subject and be in effect unless and until a subsequent interpretation concerning the above referenced subject is made by the Director of the Department of Development Review, the interpretation is reversed through a successful appeal pursuant to Article 808, or the Washoe County Code is amended to include the subject matter referenced in this interpretation.

Michael A. Harper, AICP, Director
Department of Development Review

Dated: November 7, 1996

Interpretation 96-7
ISSUANCE OF SPECIAL USE PERMITS

Pursuant to Article 910, Section 110.910.05 of Chapter 110 of the Washoe County Code, the Director of the Department of Development Review has the authority to enforce the provisions of the Development Code. In order to appropriately enforce the Development Code, the Director finds it necessary to provide the following interpretation concerning the authority of the Washoe County Park Commission concerning the issuance of special use permits for grading activity and signs for property managed by the Washoe County Parks and Recreation Department.

The Park Commission may issue a special use permit for grading activities occurring on and for signs located on land managed by the Washoe County Parks and Recreation Department when such a permit is required by the Development Code; when the noticing and meeting procedures are equal to, or exceed, the minimum requirements defined in the Development Code; when a process for appeals to the Board of County Commissioners of the issuance of the special use permit are clearly identified for the public and when those appeal procedures are the same as those available to an aggrieved party for a special use permit issued by the Washoe County Planning Commission.

BACKGROUND

Section 110.104.40 Other Agencies, subsection (c) Park Commission, states, in part: "For the purpose of this Development Code, the Park Commission is authorized to approve discretionary permits for Active Recreation Uses, provided that its noticing and meeting procedures are equal to, or exceed, the minimum requirements enumerated in this Development Code for the issuance of said permit." Although this section clearly enumerates the authority of the Park Commission to issue a special use permit for Active Recreation Uses, it is unclear whether the Park Commission has the authority to issue special use permits for activities that transcend a particular use type, specifically, special use permits for grading activity and signs where the Development Code requires such a permit.

It is logical to extend this authority for grading and sign special use permits to the Park Commission as the grading activity or erection of signs on land managed by the Parks and Recreation Department is typically pursuant to a plan endorsed by the Park Commission and Board of County Commissioners. To introduce another organization into the review of these types of activities (e.g. the Planning Commission) after the plan that requires grading or signs has been approved by the Park Commission, interrupts continuity in the development process.

One area that is not addressed is that of appeals of the Park Commission's action to the Board of County Commissioners. This interpretation requires that this opportunity for appeals be made available as a condition of extending the authority to the Park Commission for issuing special use permits for grading activity and the erection of signs.

Limitations of Interpretation

This interpretation shall supersede all previous interpretations of Chapter 110 of the Washoe County Code concerning the above referenced subject and be in effect unless and until a subsequent interpretation concerning the above referenced subject is made by the Director of the Department of Development Review, the interpretation is reversed through a successful appeal pursuant to Article 808, or the Washoe County Code is amended to include the subject matter referenced in this interpretation.

Michael A. Harper, AICP, Director
Department of Development Review

Dated: November 7, 1996

Interpretation 99-1
APPLICABILITY OF HEIGHT LIMITS TO RETAINING WALLS

Pursuant to Article 910, Section 110.910.05 of Chapter 110 of the Washoe County Code, the Director of the Department of Community Development has the authority to enforce the provisions of the Development Code. In order to appropriately enforce the Development Code, the Director finds it necessary to provide the following interpretation concerning the applicability of Section 110.406.25, Unobstructed Yards, and Section 110.406.45, Fences, Walls or Perimeter Plantings, as those sections and related sections apply to the construction of retaining walls within designated and required yards. After August 13, 1999, all walls constructed, regardless of the intended purpose of the wall, including retaining walls for the purpose of retaining cuts or backfill, shall comply with the height restrictions as set forth in Section 110.406.45, Fences, Walls or Perimeter Plantings.

For purposes of implementation, the following practices shall be utilized:

- For purposes of measuring the height of the retaining wall, measurements shall be taken from the grade at the lowest side of the proposed retaining wall.

- For purposes of safety, fencing at the retaining wall will be allowed consistent with the height requirements of the yard. Fencing height shall be measured from the highest final grade as approved, adjacent to the wall.

BACKGROUND

An issue has risen as to the applicability of Article 406, Building Placement Standards, to the construction of retaining walls on property. Of specific concern is the requirement to maintain yards as required by the Development Code to be open and unobstructed from the ground to the sky except as provided within the article. The article further goes forth to limit decks within the front yard setback to a height not to exceed eighteen (18) inches, obstructions to vision within the visibility triangle are limited to eighteen (18) inches higher than the curb level, and Section 110.406.45, Fences, Walls or Perimeter Plantings, specifically sets forth heights for fences, walls or perimeter plantings in residential, commercial and industrial type uses and as specialty fencing. Generally, the rule is four and one-half (4.5) feet in the front yard of any residential required front yard with a maximum of six (6) feet for the balance of the required yards.

The question is whether the design of a wall as a retaining wall is subject to the general standards as set forth under Section 110.406.45. The Director has determined that all walls, whether they are retaining walls, decorative walls or fencing walls, are subject to the height limitations as set forth in the Development Code. Administrative relief to the strict application of these requirements is available through the variance process together with an appropriate grading or other development permit.

In analyzing the applicability of these sections to retaining walls, there are a number of issues which direct the decision:

- The Development Code, in numerous sections, refers to the intention of maintaining yards in natural open settings, consistent with the Development Code requirements.

- Failing to regulate the construction of retaining walls could easily result in conditions both inconsistent with the stated goals of the Development Code, as well as creating public health and safety issues which were previously not existing with the creation of the parcel. As an example, creation of large fill areas can create significant changes in drainage which would shift the natural flow of water onto adjoining neighbors' parcels or onto streets.

- The allowance of high retaining walls could remove a natural appearance in a roadway setting and, in fact, create a cement or walled canyon which is inconsistent with the design approved in the development review process.

- The creation of high walls at the point of intersections with property lines and the need for resulting driveways could create hazards to both the traveling public along roadways and the merging traffic from what becomes virtually blind intersections along the streets.

- In the case of large cuts or fills, area which had previously been subject to natural sunlight, both on and off the property, may become shaded and subject to extreme icing conditions.

- In the case of high walls that are created along property lines, there are two additional problems. First, there is a significant safety issue when one side of the wall is backfilled with earth, resulting in an excessive change of elevation on one side of the wall. This will require additional fencing or height added to the wall. This is necessary to assure the safety both from falls off the high side of the wall and protection from falling objects on the low side of the wall. Secondly, the added height of the wall or fencing further compounds issues of shading, views and safety.

- In the case of high cuts or fills on property lines, reciprocal maintenance access easements would also be required so that the adjoining property owners maintain any required fencing for safety purposes.

The Development Code does include a definition of a fence, which does exclude retaining walls. This definition, while leading to some confusion, is internally consistent and would allow the exclusion of all or a portion of the height of a retaining wall from the overall height of a fence located thereon. There is, however, no similar or related definition of either a wall or a retaining wall within the code.

For all of the above reasons, the Director believes it is imperative that retaining walls be reviewed to assure that the resulting lot is consistent with the design guidelines of the Development Code, all issues of public health and safety are reviewed and considered, and appropriate safety measures are included in the resulting permits for installation.

Limitations of Interpretation

This interpretation shall supersede all previous interpretations of Chapter 110 of the Washoe County Code concerning the above referenced subject and be in effect unless and until a subsequent interpretation concerning the above referenced subject is made by the Director of the Department of Community Development, the interpretation is reversed through a successful appeal pursuant to Article 808, or the Washoe County Code is amended to include the subject matter referenced in this interpretation.

Robert W. Sellman, Community Development Director
Department of Community Development

Dated: August 19, 1999

Interpretation 03-2
DIVISION OF GR PARCELS WHEN A SIGNIFICANT HYDROLOGIC RESOURCE EXISTS

Pursuant to Article 910, Section 110.910.05 of Chapter 110 of the Washoe County Code, the Director of the Department of Community Development has the authority to enforce the provisions of the Development Code. In order to appropriately enforce the Development Code, the Director finds it necessary to provide the following interpretation concerning division of General Rural (GR) parcels when a significant hydrologic resource exists.

Washoe County Code Section 110.406.05 established minimum lot sizes for each regulatory zone in Washoe County. The minimum lot size for General Rural (GR) is forty (40) acres. It has been general practice not to allow the division of GR parcels to less than forty (40) acres in size and to not allow the division of GR parcels that are already less than forty (40) acres in size.

BACKGROUND

In January 2001, the Development Code was amended to include Article 418, Significant Hydrologic Resources. This article regulates development activity within and adjacent to perennial streams to ensure that these resources are protected and enhanced. Perennial streams were one of the natural resource elements used to guide the original mapping of the General Rural regulatory zone. When a development application includes a perennial stream that has been mapped as General Rural regulatory zone, the GR area based on the perennial stream may be divided *when the provisions of Article 418 will apply* and Community Development staff determine that Article 418 will provide an equivalent or greater level of protection to that afforded by GR.

Limitations of Interpretation

This interpretation shall not be construed to alter the minimum lot size provisions and other standards of Article 406, Building Placement Standards. This interpretation shall be in effect unless and until the Director of Community Development makes a subsequent interpretation concerning this subject, the interpretation is reversed through a successful appeal, or the Washoe County Code is amended to include the subject matter referenced in this interpretation.

Adrian P. Freund, AICP, Director
Department of Community Development

Dated: October 8, 2003

Interpretation 03-3
APPLICATION OF RV PARK STANDARDS TO ALL COMMERCIAL CAMPGROUND FACILITIES

Pursuant to Article 910, Section 110.910.05 of Chapter 110 of the Washoe County Code, the Director of the Department of Community Development has the authority to enforce the provisions of the Development Code. In order to appropriately enforce the Development Code, the Director finds it necessary to provide the following interpretation concerning standards that shall be applied to recreational vehicle parks and commercial campgrounds.

Washoe County Code Chapter 110, Article 316, established standards for all recreational vehicle (RV) parks in Washoe County. These standards include size and setbacks for RV spaces, landscape requirements, paving requirements and ancillary uses that may be allowed within an RV park.

BACKGROUND

The Development Code, originally adopted in December 1992, includes Article 316, Recreational Vehicle Parks. In Article 304, Use Classification System, both RV parks and commercial campgrounds are dealt with as one use type. There are no definitions for either of the terms in Article 902, Definitions. When there is a development application for a commercial campground or a recreational vehicle park, the standards established in Article 316 shall apply. The exception to this rule is that sanitary sewer is not required to be provided to each campsite in a commercial campground. This interpretation will allow the development of all types of camping within commercial campgrounds within Washoe County without requiring sanitary sewer hook-ups if there are sufficient permanent sanitary shower and toilet facilities on-site for the utilization of the patrons of the facility, as required by the District Health Department. This interpretation further includes that areas designated for tent/primitive camping are not required to have water, sewer or electricity at individual campsites, but provisions must be made for the general campsite area.

Limitations of Interpretation

This interpretation shall not be construed to alter any other standards of Article 316, Recreational Vehicle Parks, nor to alter any other requirements of a commercial activity as required by the Development Code. This interpretation shall be in effect unless and until the Director of Community Development makes a subsequent interpretation concerning this subject, the interpretation is reversed through a successful appeal, or the Washoe County Code is amended to include the subject matter referenced in this interpretation.

Adrian P. Freund, AICP, Director
Department of Community Development

Dated: December 8, 2003

Interpretation 04-1
APPLICATION OF PARKING AND LANDSCAPING STANDARDS TO EXISTING COMMERCIAL DEVELOPMENT

Pursuant to Article 910, Section 110.910.05 of Chapter 110 of the Washoe County Code, the Director of the Department of Community Development has the authority to enforce the provisions of the Development Code. In order to appropriately enforce the Development Code, the Director finds it necessary to provide the following interpretation concerning standards that shall be applied to continued use of existing, nonconforming commercial developments when there is a change in conforming use type or an expansion of a conforming use type within a nonconforming development.

BACKGROUND

Washoe County Code Chapter 110, Article 904, deals with nonconformance. This article defines several types of nonconformance:

- "Nonconforming lot" is a parcel of land that does not conform to current size or shape requirements for the regulatory zone in which it is located.
- "Nonconforming use of land" is a use, not involving a structure, that is no longer allowed in the regulatory zone in which it is located.
- "Nonconforming use of a structure" is a use, partially or wholly within a structure, that is no longer allowed in the regulatory zone in which it is located.
- "Nonconforming structure" is a structure that no longer meets height, setback or coverage requirements for the regulatory zone in which it is located.

The final type of nonconformance is a nonconforming development. "Development" is defined in Section 110.902.15, Definitions, as follows:

> "Development" means any man-made change to improved or unimproved real estate including the construction of buildings or other structures, mining, dredging, filling, grading, paving, excavation, drilling operations or storage of equipment or materials.

A nonconforming development is defined in Section 110.904.10, Types of Nonconformance, subsection (e) as follows:

> <u>Nonconforming Development.</u> A development which was legal when brought into existence but does not conform to the current parking, loading or landscaping requirements of the regulatory zone where it is located. A nonconforming development is subject to the provisions of Section 110.904.35.

Section 110.904.35, Nonconforming Development, reads as follows:

> A nonconforming development shall be subject to the provisions of this section. Existing conforming buildings or uses whose off-street parking and loading do not conform to the provisions of this Development Code may be expanded or have facilities added, and one conforming use may be changed to another, provided that the requirements for off-street parking and loading spaces are complied with in accordance with Article 410.

Section 110.410.05, Applicability of Article, deals with the applicability of Article 410, Parking and Loading, and reads as follows:

> [The provisions of this Article shall apply whenever:]
>
> (c) The intensity of use, or expansion of use is changed, the parking and loading requirements for the new use shall apply.

INTERPRETATION

When a commercial development that does not comply with current development standards (nonconforming development) is enlarged by less than fifty (50) percent, or if one allowed use is substituted for another and the structure(s) within the development are not enlarged, the applicant shall demonstrate that current standards, regarding the number of parking spaces for the new or expanded use are complied with. Any new parking spaces or loading areas required shall comply with all current standards, pursuant to Article 410.

When a commercial development that does not comply with current development standards is enlarged by fifty (50) percent or more, or if one allowed use is substituted for another and the structure(s) within the development are enlarged by fifty (50) percent or more, the applicant shall demonstrate that all current parking and loading standards for the entire development, pursuant to Article 410, shall be met.

Further, Section 110.412.05, Applicability, includes the following statement:

> (b) <u>Expanding Development.</u> This article applies to expansion of floor area of existing development, except as otherwise provided below:
>
> (1) If the expansion is less than fifty (50) percent, this article shall apply to the developable lot area associated with the proposed expansion only and the remainder of the use or structure shall be governed by regulations in force at the time of the original approval; and
>
> (2) If the expansion or subsequent expansions cumulatively results in a fifty (50) percent or greater increase, the entire development shall be required to comply with this article, unless the Director of Community Development waives this requirement, in whole or in part, prior to the expansion.

Article 904, Nonconformance, does not refer to expansion of nonconforming developments being required to meet landscaping standards, only parking and loading standards. Therefore, to read these two apparently contradictory provisions in harmony, the Director determines that when there is a change in allowed uses within an existing nonconforming development, and the

development is not expanded or is expanded by less than fifty (50) percent, the provisions of Article 412, Landscaping, shall not apply.

Further, when a nonconforming development is expanded by fifty (50) percent or more, the provisions of Article 412, Landscaping, shall apply to the entire development.

Limitations of Interpretation

This interpretation shall not be construed to alter any standards of Article 410, Parking and Loading; Article 412, Landscaping or Article 904, Nonconformance, nor to alter any other requirements of a commercial activity as required by the Development Code. This interpretation shall be in effect unless and until the Director of Community Development makes a subsequent interpretation concerning this subject, the interpretation is reversed through a successful appeal, or the Washoe County Code is amended to include the subject matter referenced in this interpretation.

Adrian P. Freund, AICP, Director
Department of Community Development

Dated: February 6, 2004

Interpretation 04-2
BOUNDARY LINE ADJUSTMENTS IN THE GENERAL RURAL REGULATORY ZONE

Pursuant to Article 910, Section 110.910.05 of Chapter 110 of the Washoe County Code, the Director of the Department of Community Development has the authority to enforce the provisions of the Development Code. In order to appropriately and consistently enforce the Development Code, the Director finds it necessary to provide the following interpretation concerning boundary line adjustments (BLA) of split-zoned parcels that include a portion of the lot designated General Rural.

BACKGROUND

Washoe County Code Section 110.406.05 establishes minimum lot sizes for each regulatory zone in Washoe County. The minimum lot size for General Rural (GR) is forty (40) acres. Section 110.404.10 of the Washoe County Code states in part, "no lot or parcel shall be reduced in area so as to be less in any dimension than is required by the requirements of the regulatory zone in which the lot or parcel is located". It has been the general practice of the Community Development Department to read these provisions in tandem and disallow a boundary line adjustment that would reduce the size of the General Rural regulatory zone on any parcel.

INTERPRETATION

Where General Rural on a parcel or contiguous parcels constitutes an area of less than forty (40) acres, the requirements of Sections 110.406.05 and 110.404.10 cannot be applied since the lot or parcel is already "less in any dimension than is required by the requirements of the (GR) regulatory zone…."

A boundary line adjustment under Article 618 may be processed on split-zoned parcels containing less than forty (40) acres of General Rural when the boundary line adjustment does not reduce the aggregate acreage of General Rural on the lots or parcels affected by the boundary line adjustment.

Limitations of Interpretation

All requirements of Article 618 of the Development Code shall apply to a boundary line adjustment. No additional lots shall be created and no parcel shall be created that is smaller than that allowed by Article 404, Lot Standards, except as noted above under Background. Conditions may be attached to a boundary line adjustment involving General Rural lands in order to protect sensitive features.

This interpretation supersedes any other interpretation involving this subject matter. This interpretation shall be in effect unless and until the Director of Community Development makes a subsequent interpretation concerning this subject, the interpretation is reversed through a successful appeal, or the Washoe County Code is amended to include the subject matter of this interpretation.

Adrian P. Freund, AICP, Director
Department of Community Development

Dated: February 9, 2004

Interpretation 04-3
CONSTRUCTION OF FENCES ON INTERNAL LOTS

Pursuant to Article 910, Section 110.910.05 of Chapter 110 of the Washoe County Code, the Director of the Department of Community Development has the authority to enforce the provisions of the Development Code. In order to appropriately enforce the Development Code, the Director finds it necessary to provide the following interpretation concerning the construction of fences on lots that are located in the internal of a block and are accessed solely by an easement that terminates on the front lot line.

The maximum allowed height for fences, walls, or perimeter planting for internal lots shall be six (6) feet along all property lines.

BACKGROUND

Washoe County Code Section 110.406.50 established a maximum height for fences, walls, or perimeter planting for residential uses of four-and-one-half (4.5) feet along the front lot line and along side lot lines in the required front yard setback area. The maximum height for the remainder of the property is six (6) feet. However, applying this standard to internal lots (lots surrounded by adjacent parcels that front on streets) has resulted in uncertainty in approving fence building permit applications for fence heights on these internal lots.

The Development Code requires that all lots, including internal lots, have a front lot line, which, for internal lots, would be the lot line that forms the terminus of the access easement. Along this lot line and along side lot lines in the required front yard setback area, fences are restricted to four-and-one-half (4.5) feet in height. However, these lot lines are also viewed by the Code as constituting a side or rear lot line for the abutting lot, on which the adjacent property owner has the right to build a six (6) foot high fence. Conceivably, the owner of the internal lot could construct a four-and-one-half (4.5) foot high fence along the front lot line, only to have the adjacent property owner construct an abutting six (6) foot high fence along what is construed as the side or rear lot line of that parcel.

INTERPRETATION

A resolution is to allow internal lot owners the ability to construct six (6) foot high fences along all property lines whereon adjoining lot owners can construct six (6) foot fences along the same lot lines by right. However, the provisions of Section 110.406.50(d), Entry Gate and Entry Columns, shall not apply to those fence building permit applications using this interpretation to increase the height of entry gates or entry columns above six (6) feet when the lot line constitutes a rear or side lot line of the abutting property.

Limitations of Interpretation

This interpretation shall not be construed to alter other standards of Article 406, Building Placement Standards. This interpretation shall be in effect unless and until the Director of Community Development makes a subsequent interpretation concerning this subject, the interpretation is reversed through a successful appeal, or the Washoe County Code is amended to include the subject matter referenced in this interpretation.

Adrian P. Freund, AICP, Director
Department of Community Development

Dated: March 15, 2004

Interpretation 04-4
REQUIREMENTS TO ESTABLISH AGRICULTURAL BUILDINGS AS A MAIN USE AND LIMITATIONS ON STRUCTURES

Pursuant to Article 910, Section 110.910.05 of Chapter 110 of the Washoe County Code, the Director of the Department of Community Development has the authority to enforce the provisions of the Development Code. In order to appropriately enforce the Development Code, the Director finds it necessary to provide standards and procedures to establish agricultural buildings as a main use.

The property owner must demonstrate to the satisfaction of the Department of Community Development that agricultural uses allowed pursuant to Article 302 exist on the property and/or that livestock either currently live, or will live, on the property within ninety (90) days of the final approval date for required building permits before agricultural buildings may be allowed as a main use.

Semi-trailers, railroad cars and other similar containers are not structures to be used for agricultural buildings as a main use.

BACKGROUND

Agricultural Uses and Livestock

Washoe County Code Enforcement staff has dealt with several cases involving property owners who have constructed “barns” and other similar structures on their property where there are no other approved uses on the property and where there is no agricultural or livestock use on the property. The Development Code was amended in May of 2004 to allow agricultural buildings as a main use with specified restrictions and requirements.

Washoe County Code Section 110.306.05 allows accessory uses and structures in all regulatory zones only when such uses/structures are incidental to a principal use(s) and main structure on the property. The recent changes to Article 330 allow property owners to place agricultural building(s) on their property as a main (principal) use, but only after specific restrictions/ requirements are satisfied. This interpretation clarifies those restrictions and requirements.

Washoe County Code Section 110.330.55(a) regulates the construction, erection, location and use of agricultural buildings as a main use. Agricultural buildings are described within this section as buildings, corrals, coops, pens, stables or structures used in conjunction with agricultural uses or as a shelter for livestock. Washoe County Code Section 110.330.55(a)(1) further states:

> “The structures shall be used for the storage of agricultural equipment and products related to an allowed on-site agricultural use or shelter for livestock that must live on the property;”.

The use of the term “structures” within Washoe County Code Section 110.330.55(a)(1) is clearly intended to denote agricultural buildings as described in Washoe County Code Section 110.330.55(a). Further, Washoe County Code Section 110.330.55(a)(1) clearly states that the agricultural use must be both allowed and on-site. The structures (i.e. agricultural buildings) must also be only for the *storage* of agricultural *equipment* and/or *products* related to the agricultural use (emphasis added). As an alternative, the section requires that livestock (as defined in Article 902) must live on the property.

Applying both Development Code sections means that there must exist some measure of proof that agricultural uses on a property are both allowable pursuant to the Development Code and on-site (that is, a current and existing use), or that livestock is present on the property, before permission may be granted to place an agricultural building on a property as a main use.

Determining agricultural uses on a property is a two-step process. First, the use must be allowed within the regulatory zone pursuant to Table 110.302.05.5, Table of Uses (Agricultural Use Types) in the Development Code. Second, the agricultural use must be on-site, that is current and existing on the property. Only when agricultural uses on a property are both allowable and on-site may an agricultural building as a main use be placed on the property.

Since it is plausible that some types of agricultural buildings may need to be placed on a property before livestock lives on the property (e.g. a fence to enclose a pasture area and/or a structure to shelter the livestock), it is reasonable that livestock need not be living on the property at the time of building permit application, but should be living on the property within a reasonable period of time after final approval(s) are granted for the permits.

It is also plausible that agricultural buildings to shelter livestock may serve additional purposes connected with the livestock, rather than being strictly limited to shelter. For example, portions of the agricultural buildings may serve to store hay or feed for the livestock, or to store equipment directly connected with the livestock (e.g. harnesses and other riding gear so the property owner may ride or train horses on the property). However, such additional purposes must clearly be ancillary and secondary to the principal use of the agricultural building as a shelter for the livestock.

Finally, the measure of proof for both allowable and on-site agricultural uses and/or livestock living on the property rests with the property owner. A written statement from the property owner attesting to the allowable/on-site agricultural uses and/or livestock living on the property will suffice as a suitable measure of proof. When only agricultural uses are on the property, the property owner must also attest that the agricultural buildings will be used principally for the storage of agricultural equipment and/or products directly related to the agricultural use(s). The written statement must accompany the building permit application and will remain as a public record within the permit after approval and final checks.

Structures

Washoe County Code Section 110.330.55(a) and (a)(1) use the term “structure” to describe agricultural buildings allowed as a main use. Article 902 of the Development Code defines structure as:

> Structure. "Structure" means a walled and roofed building or manufactured home, including a gas or liquid storage tank that is primarily above ground. "Structure" does not include a tent, trailer or vehicle.

A building is further defined within Article 902 as:

Building. "Building" means any structure having a permanent foundation, a roof supported by columns or walls and used for the enclosure of persons, animals or chattels, but not including a trailer (mobile home) or tent.

A semi-trailer, railroad car and/or other similar container are neither a structure nor a building as defined in the Development Code. Further, Interpretation 97-1 limits the use of a semi-trailer, railroad car and/or other similar container to an accessory structure, and not as a main or principal structure on a property. For these two reasons, a semi-trailer, railroad car and/or other similar container may not be used for agricultural buildings as a main use.

INTERPRETATION

For a building permit(s) application to place an agricultural building(s) on a property as a main use, the property owner shall provide a written statement:

1. Attesting that agricultural uses are currently on the property, together with a description of those uses, and verifying that the agricultural buildings will be used principally to store agricultural equipment and/or products related to the agricultural use; and/or

2. Attesting that livestock either currently lives on the property or will live on the property within ninety (90) days from the final approval date for building permits issued for the agricultural building(s); and verifying that the principal use of the agricultural building(s) will be shelter for the livestock.

The Department of Community Development will verify that the agricultural uses are allowed pursuant to Article 302 of the Development Code before granting approval of the building permit(s). The property owner's statement may be subject to field verification by department staff prior to building permit approval. The written statement from the property owner will remain as a public record in the building permit(s) file.

Semi-trailers, railroad cars and other similar containers are not structures to be used for agricultural buildings as a main use.

Limitations of Interpretation

This interpretation shall supersede all previous interpretations of Chapter 110 of the Washoe County Code concerning the above referenced subject and be in effect unless and until the Director of the Department of Community Development makes a subsequent interpretation concerning this subject, the interpretation is reversed through a successful appeal pursuant to Article 808, or the Washoe County Code is amended to include the subject matter referenced in this interpretation.

Adrian P. Freund, AICP, Director
Department of Community Development

Dated: October 19, 2004

Interpretation 06-1
DETERMINING WHETHER FRACTIONAL LOT REMAINDERS MAY BE ROUNDED UP TO NEXT WHOLE NUMBER

Pursuant to Article 910, Section 110.910.05 of Chapter 110 of the Washoe County Code (WCC), the Director of the Department of Community Development has the authority to enforce the provisions of the Development Code. In order to correctly and consistently administer the Development Code, the Director finds it necessary to provide the following interpretation to define when a fractional part of a lot may be rounded up to the next whole integer for determining the available number of lots for any given parcel.

BACKGROUND

Washoe County Code Table 110.406.05.1 Part 1 establishes density/intensity standards for each regulatory zone in Washoe County. Table 110.406.05.1 Part 2 establishes minimum lot area standards for each regulatory zone in Washoe County. The average lot area is not specified within the Development Code but it may be determined by dividing 1 acre by the Dwelling Unit per Acre (du/ac) in Part 1 (e.g. HDR du/ac is 0.4 which divided into 1 equals 2.5 acres per dwelling unit).

Washoe County Code Section 110.402.05 states that Part 1 of Table 110.406.05.1 specifies, "the maximum number of dwelling units per gross acre." Experience has shown that development intensities permitted by zoning classifications are seldom achieved (e.g., 3 du/ac generally equates to a gross density of 2.2 to 2.5 du/ac). Therefore, allowing individual developments that satisfy the following specific criteria will have negligible impacts within any zoning classification of any specific planning area since the majority (approximately 80%) of the fractional remainders will be rounded down.

INTERPRETATION

Therefore, to determine the lot count for any given parcel, the Dwelling Unit per Acre (du/ac) is first calculated for the parcel within that specific zoning classification. When the remaining acreage fulfills the minimum lot requirement for the zoning district, an additional lot will be permitted. This interpretation will not allow the planned density for any given planning area within the Washoe County Comprehensive Plan to be exceeded.

Limitations of Interpretation

This interpretation applies only to zoning classifications that have a specified maximum number of dwelling units per gross acre for residential development. It cannot be applied to General Rural (GR) zoning because Table 110.406.05.1 Part 2 lists the minimum lot size for GR as being forty (40) acres.

This interpretation supersedes any other interpretation involving this subject matter. This interpretation shall be in effect unless and until the Director of Community Development makes a subsequent interpretation concerning this subject, the interpretation is reversed through a successful appeal, or the Washoe County Code is amended to include the subject matter of this interpretation.

Adrian P. Freund, AICP, Director
Department of Community Development

Dated: July 20, 2006

Interpretation 09-1

CONSTRUCTION OF FENCES ADJACENT TO EMERGENCY ACCESS EASEMENTS AND CUL-DE-SACS

Pursuant to Article 910, Section 110.910.05 of Chapter 110 of the Washoe County Code, the Director of the Department of Community Development has the authority to enforce the provisions of the Development Code. In order to appropriately enforce the Development Code, the Director finds it necessary to provide the following interpretation concerning the construction of fences adjacent to a public right-of-way comprised of a cul-de-sac and adjacent to an emergency access easement.

The maximum allowed height for fences, walls, or perimeter planting adjacent to a public right-of-way comprised of a cul-de-sac and adjacent to an emergency access easement shall be six (6) feet along all property lines with the exception of the front adjacent to the public right-of-way which shall be 4 ½ feet within 10 feet of the property line, consistent with the setbacks required for a modified side yard (being similar in that there are two non-parallel front yards associated with the lot).

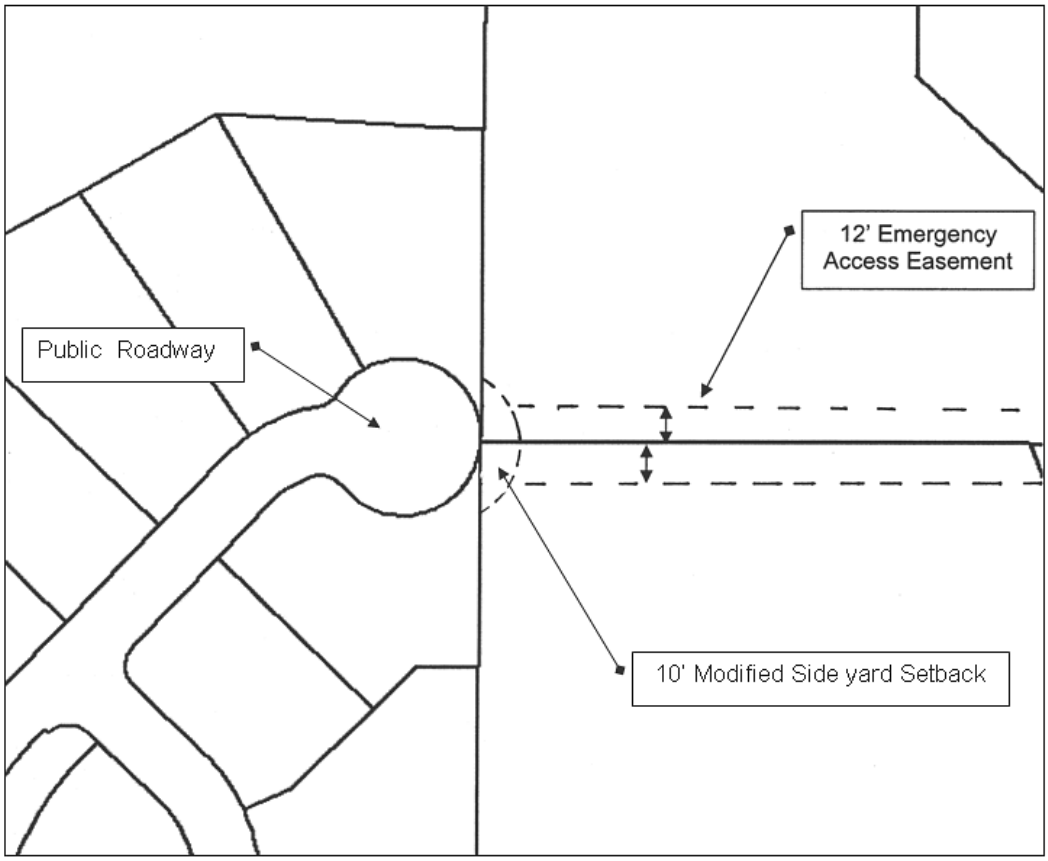

BACKGROUND

Washoe County Code Section 110.406.50 established a maximum height for fences, walls, or perimeter planting for residential uses of four-and-one-half (4.5) feet along the front lot line and along side lot lines in the required front yard setback area. The maximum height for the remainder of the property is six (6) feet. However, applying this standard to lots abutting the end of a cul-de-sac, with only emergency access has resulted in uncertainty in approving fence building permit applications for fence heights on these lots.

The Development Code requires that all lots have a front lot line, which, for such lots, would be the lot line that forms the primary access, not the emergency access. Along this (front) lot line and along side lot lines in the required front yard setback area, fences are restricted to four-and-one-half (4.5) feet in height. However, these lot lines are also viewed by the Code as constituting a side or rear lot line for the lot abutting the emergency access. Fencing cannot be constructed to block emergency access, without an approved gate. Because a portion of the parcels abut a public right of way that portion must be considered a front and due to having two fronts the Director determines that a modified side yard setback may be applied, as would be on corner lots.

INTERPRETATION

A resolution is to allow such lot owners the ability to construct six (6) foot high fences along all property lines with the exception of the 10' adjacent to a public right-of-way. However, the provisions of Section 110.406.50(d), Entry Gate and Entry Columns, shall not apply to those fence building permit applications using this interpretation to increase the height of entry gates or entry columns above six (6) feet.

Limitations of Interpretation

This interpretation shall not be construed to alter other standards of Article 406, Building Placement Standards. This interpretation shall be in effect unless and until the Director of Community Development makes a subsequent interpretation concerning this subject, the interpretation is reversed through a successful appeal, or the Washoe County Code is amended to include the subject matter referenced in this interpretation.

Adrian P. Freund, FAICP, Director
Department of Community Development

Dated: September 16, 2009

Interpretation 11-1
FARRIER TRAINING FACILITY, USE CLASSIFICATION

Washoe County Code Section 110.304.10 grants the Director of Community Development the authority to classify uses according to use types and to develop an administrative list of common uses and the use types into which they are classified. Additionally, Section 110.914.05(c) gives the Director the authority "to interpret the provisions of the Development Code."

BACKGROUND

The question has been raised whether a farrier[1] training facility is a permitted use, and if so, how that use would be classified. There are currently no known unpermitted or lawfully permitted farrier training facilities in unincorporated Washoe County. While a farrier is presumed to be an agricultural vocation, teaching this craft to others has not been addressed as a use within Article 302, *Allowed Uses*. This interpretation establishes the appropriate Use Type (classification) for a Farrier Training Facility.

At first review, a Farrier Training Facility seems to be a vocational training, which is conventionally classified as a Commercial Educational Services use type. However, it seems unlikely that the "primary" purpose of teaching people to shoe horses is for them to get a job (i.e., vocational training). While some people who learn this skill will make it their job, it seems at least as likely that most people will use the skill not to get a job but to care for their own horses or use the skill to supplement skills required to conduct agricultural production operations.

Further, pursuant to Article 330, *Domestic Pets and Livestock*, livestock (which includes horses) is only permitted to be kept or maintained in the Rural, Low Density and Suburban Density Regulatory Zones on a parcel not less than one-half acre in size. Commercial Educational Services are only permitted in Commercial, Industrial, Public/Semi Public, Parks and Recreation, and Urban Regulatory Zones. So, if a farrier school were classified as a Commercial Educational Service, the horses required to be on site to teach the vocation would not be allowed. Therefore, it is not appropriate to classify a farrier training facility as a Commercial Educational Service.

The use type most closely associated with the activities of a farrier training facility is Animal Production, under Agricultural Use Types, WCC Section 110.304.35(c). Agricultural use types currently include uses employing "agricultural methods." Since Animal Production includes typical uses such as grazing and ranching, these uses are considered "agricultural methods" employing horses. The North American Industrial Classification System identifies farrier as one of the "support activities for agricultural production" [see WCC Section 110.304.05(c) for reference to the NAICS for classifying new uses]. Therefore, a farrier training facility can arguably be classified as Animal Production. Furthermore, the WCC Section 110.304.25(b)(2) definition of commercial stables suggests that this type of use fits within the definition of Animal Production because it expressly states that the use of horses primarily for agricultural operations is within the scope of Animal Production. In at least a literal sense, using horses to train people to shoe them is the use of horses primarily for agricultural purposes given the horse's close association historically with agricultural functions.

In light of these similarities, a farrier training facility is recognized as a primary use under the Animal Production use type within the Agricultural use classification. This means that a farrier

[1] *Farrier is defined by the* Webster's Ninth New Collegiate Dictionary *as an individual that shoes horses.*

training facility will be permitted in the same regulatory zones, using the same permitting process and meeting the same requirements, as an Animal Production use type.

LIMITATIONS OF INTERPRETATION

This interpretation shall supersede all previous interpretations of Washoe County Chapter 110 concerning the above referenced subject and be in effect unless and until a subsequent interpretation concerning the above referenced subject is made by the Director of Community Development, the interpretation is reversed through a successful appeal pursuant to Article 808, Administrative Permits, the interpretation is otherwise invalidated pursuant to law, or the Washoe County Code is amended to include the subject matter referenced in this interpretation.

David Childs, ICMA-CM, Acting Community Development Director
Community Development Department

Dated: January 26, 2011

Interpretation 11-3
CLASSIFICATION OF TEMPORARY OUTDOOR ENTERTAINMENT USES

Washoe County Code Section 110.304.10 grants the Director of Community Development the authority to classify uses according to use types and to develop an administrative list of common uses and the use types into which they are classified. Additionally, Section 110.914.05(c) gives the Director the authority "to interpret the provisions of the Development Code."

BACKGROUND

There have been questions raised regarding various types of temporary uses that may occur out-of-doors on private parcels. Some of these uses have been livestock related (e.g. equestrian events such as barrel racing and bull riding) and outdoor racing (e.g. motorcycles or motocross) and other activities with similar characteristics. In some instances fees for participation have been collected, in other cases voluntary contributions have been solicited, and in other instances monies have not been collected, but members of the public were invited to the event.

It is the determination of the Director that such activities are regulated through the Development Code as a temporary use or activity regulated by Article 310, Temporary Uses and Structures. This is true whether the activity is engaged in for profit or in a not-for-profit manner.

The Director further determines that such activities are subject to Section 110.310.20 (Circuses, Carnival or Other Outdoor Entertainment Events) of the Development Code. Such activities or uses are limited to a maximum of 10 days in any calendar year.

Various types of licensure and/or review may be necessary depending upon the number of attendees at the event. A Washoe County Business License "Special Event License" is necessary for events of less than 100 attendees[1]. A Washoe County Business License "Outdoor Community Event License" is necessary for all events with 100 to 999 attendees while events with 300 to 999 also require the approval of an Administrative Permit pursuant to Article 808 of the Development Code. Events above 1,000 attendees require the approval of a Washoe County Business License "Outdoor Festival License" by the Board of County Commissioners.

The Director further determines that such activities engaged in by the property owner, along with family and friends, on a private parcel, that are not open to clubs, associations or to the public are private uses and not subject to the provisions of this interpretation.

LIMITATIONS OF INTERPRETATION

This interpretation shall supersede all previous interpretations of Washoe County Chapter 110 concerning the above referenced subject and be in effect unless and until a subsequent interpretation concerning the above referenced subject is made by the Director of Community Development, the interpretation is reversed through a successful appeal pursuant to Article 808, Administrative Permits, the interpretation is otherwise invalidated pursuant to law, or the Washoe County Code is amended to include the subject matter referenced in this interpretation.

David Childs, ICMA-CM, Acting Community Development Director
Community Development Department

Dated: May 4, 2011

Footnote:
1: Attendees means all participants, spectators, vendors, and all other persons at the subject site on any one day of the event.

Interpretation 12-1
ACCESSORY STRUCTURES IN GENERAL RURAL, LOT COVERAGE AND SIZE LIMITS

Washoe County Code Section 110.914.05(c) gives the Director of Community Development the authority "to interpret the provisions of the Development Code."

CODE SECTION IN QUESTION

Section 110.306.10 Detached Accessory Structures. Detached accessory structures are defined in Article 304, Use Classification System, under Section 110.304.15, Residential Use Types. The following development requirements shall apply to detached accessory structures:

(a) Lot Coverage. The establishment of detached accessory structures shall not exceed the following lot coverage limitations:

(1) On lots in the High Density Suburban (HDS) and Medium Density Suburban (MDS) Regulatory Zones, the combined area (i.e. square footage) of all building footprints on the lot shall not exceed fifty (50) percent of the total lot acreage;

(2) On lots in the Low Density Suburban (LDS) Regulatory Zones, the combined area (i.e. square footage) of all building footprints on the lot shall not exceed twenty-five (25) percent of the total lot acreage;

(3) On lots in the High Density Rural (HDR) Regulatory Zone, the combined area (i.e. square footage) of all building footprints on the lot shall not exceed twenty (20) percent of the total lot acreage;

(4) On lots in the Medium Density Rural (MDR) Regulatory Zone, the combined area (i.e. square footage) of all building footprints on the lot shall not exceed fifteen (15) percent of the total lot acreage;

(5) On lots in the Low Density Rural (LDR) Regulatory Zone, the combined area (i.e. square footage) of all building footprints on the lot shall not exceed ten (10) percent of the total lot acreage or eighty-thousand (80,000) square feet, whichever is less;

(6) Exemptions to lot coverage limitations. Parcels forty (40) acres in size or larger in the General Rural (GR) and General Rural Agricultural (GRA) Regulatory Zones, and all parcels in the Commercial, Industrial, and Urban Regulatory Zones, are exempt from the lot coverage limitations of this section.

(d) Size. A proposal to establish a detached accessory structure that is larger (i.e. has more square footage or a larger building footprint) than the existing main structure shall require the approval of an Administrative Permit (pursuant to Article 808), to include review of building height and architectural compatibility with surrounding dwellings, prior to the issuance of a building permit. Parcels forty (40) acres in size or larger in the General Rural (GR) and General Rural Agricultural (GRA) Regulatory Zones, and all parcels in the Commercial and Industrial Regulatory Zones, are exempt from this requirement.

BACKGROUND

Section 110.306.05 of the Development Code allows accessory uses and structures that are "incidental and subordinate to" existing principal uses and established main structures on a property. The construction of a very large detached accessory structure, that often far exceeds the size of the principal main structure on a property, can give the appearance that the accessory structure is no longer "incidental and subordinate to" the main structure on the property. As a result, the public has expressed concern when such structures are built regarding potential impacts to the character of neighborhoods (i.e. residential vs. industrial), property values, scenic degradation, architectural incompatibility, and notice to surrounding property owners of the proposed structure.

The Development Code was amended in 2011 to address these public concerns. The new Code provisions stipulate that detached accessory structures larger than the primary residence require a discretionary permit (i.e. an Administrative Permit pursuant to Article 808), in order to provide notice to adjacent property owners and allow for mitigation of conditions that can be created by the size and location of a very large accessory structure. In addition, maximum lot coverage standards were established for high, medium and low density rural and suburban parcels. The Code also provides that General Rural (GR) lots over 40 acres are exempt from the size limit restrictions on accessory structures. However, the Code does not adequately address large detached accessory structures for GR parcels less than 40 acres in size.

There are a multitude of GR parcels much less than 40 acres in size distributed throughout the unincorporated County. The majority of these smaller parcels are interspersed amongst low, medium and high density rural and suburban lots. Since the intent of the detached accessory structure size limit regulations are to protect the character, density and intensity of residential neighborhoods by providing notice to the neighbors of any proposals to build such a structure, and to allow for the mitigation of any identified adverse impacts through the issuance of a discretionary permit, it is logical that the detached accessory structure size limit regulations should apply to GR parcels less than 40 acres in size.

Washoe County Code Section 110.306.10(a) and (d) regulate the density, intensity and appearance of detached accessory structures on residential lots in high, medium or low density rural and low and medium density suburban lots. Since GR parcels less than 40 acres in size may have similar impact on the surrounding residential areas, those parcels must be treated in a similar manner as similar sized parcels. Therefore, GR parcels less than 40 acres in size will be regulated for detached accessory structures based on the closest comparable minimum lot size as specified on Table 110.406.05.1. For example a 2.5 acre GR parcel would be treated as an HDR parcel, because the minimum required lot size for HDR is two acres. Likewise, the minimum lot size for LDR is 8 acres so, if a GR lot is 8 acres or more, but less than 24 acres it

would be treated the same as an LDR parcel. A GR parcel larger than 24 acres[1], however, would be closer to the GR designation and therefore would be regulated as if zoned GR and exempted from the size limitations of Section 110.306.10(d).

LIMITATIONS OF INTERPRETATION

This interpretation shall supersede all previous interpretations of Washoe County Chapter 110 concerning the above referenced subject and be in effect unless and until a subsequent interpretation concerning the above referenced subject is made by the Director of Community Development, the interpretation is reversed through a successful appeal pursuant to Article 808, Administrative Permits, the interpretation is otherwise invalidated pursuant to law, or the Washoe County Code is amended to include the subject matter referenced in this interpretation.

/s/

Bill Whitney, Acting Community Development Director

Dated: March 8, 2012

[1] 24 acres was based on two factors. First, 24 acres is more than one-half the size required for a GR parcel and over twice as much as required for a LDR parcel. Second, if an accessory building is placed on the center of 24-acre lot, it is likely that no adjacent property owners would be within the 500-foot noticing requirement.

Interpretation 13-1

EXTENSION OF MASTER PLAN CLASSIFICATIONS AND REGULATORY ZONES INTO PUBLIC RIGHTS-OF-WAY

Washoe County Code Section 110.914.05(c) gives the Planning and Development Division Director the authority "to interpret the provisions of the Development Code." In order to appropriately apply Development Code regulations, the Director finds it necessary to provide the following interpretation regarding the extension of master plan classifications and regulatory zones into rights-of-way where no classification or zone is established on the adopted master plan and regulatory zoning maps of Washoe County.

When a right-of-way is abandoned, the land is given to the person who dedicated it to the County, or their successors. The land is typically split down the center line of the right-of-way and is consolidated into the abutting parcel(s). When the right-of-way is consolidated with a parcel, the master plan classification and regulatory zone of that parcel will be extended into the abandoned area. See Exhibit A, next page.

BACKGROUND

The County has not adopted any master plan classifications or regulatory zoning for public rights-of-way. Occasionally, the County abandons, partially or wholly, the rights-of-ways it possesses. The Development Code does not state what classification or zoning accrues to the land that is no longer public right-of-way.

The previous interpretation 95-1 provided that when a public right-of-way was abandoned, the zoning on the parcel contiguous to the right-of-way was extended into the abandoned portion of the right-of-way. The 1995 interpretation was approved when the County used a one-map system, wherein the master plan and zoning were adopted on a single map. The County now uses a two-map system, with different master plan maps and regulatory zoning maps. This interpretation replicates the 1995 interpretation by applying a similar methodology to both the master plan classification and the regulatory zoning.

Exhibit A

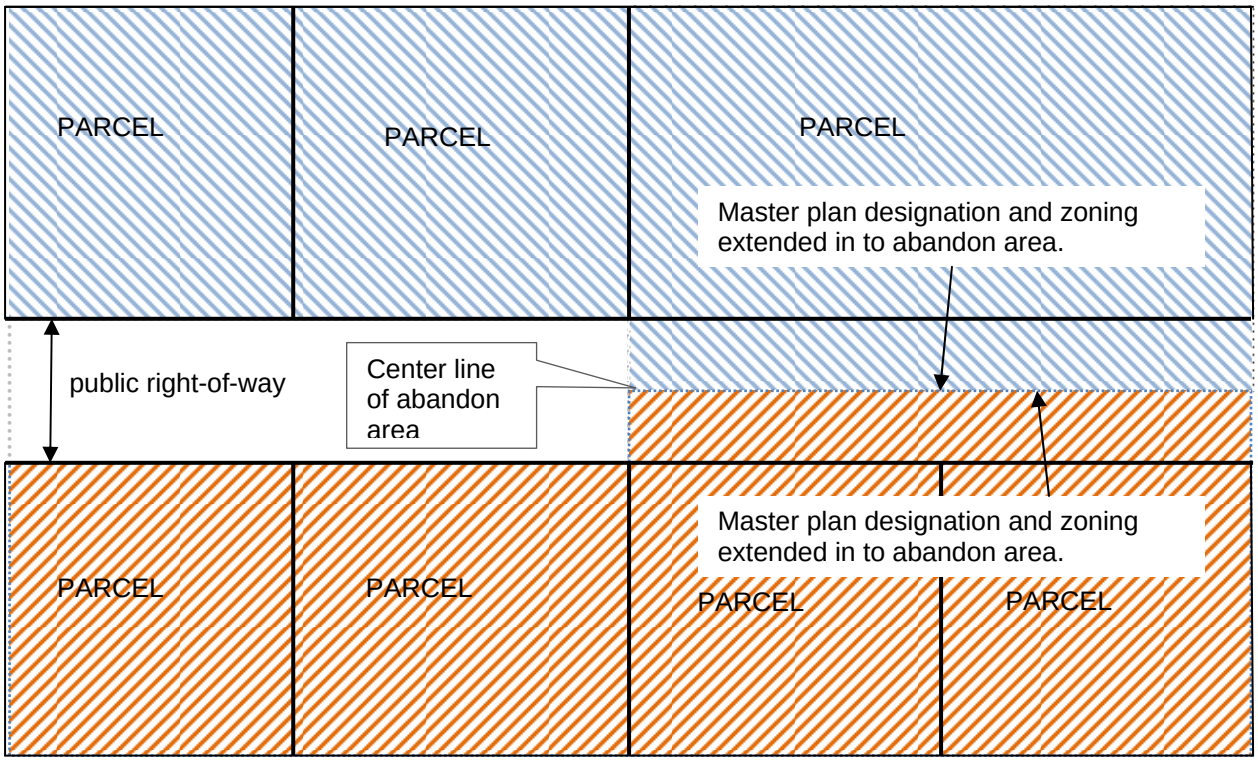

LIMITATIONS OF INTERPRETATION

This interpretation shall supersede all previous interpretations of Washoe County Chapter 110 concerning the referenced subject and will be in effect unless and until a subsequent interpretation concerning the referenced subject is made by the Planning & Development Division Director, the interpretation is reversed through a successful appeal pursuant to Article 808, *Administrative Permits*, the interpretation is otherwise invalidated pursuant to law, or the Washoe County Code is amended to include the referenced subject matter.

/s/

Bill Whitney, Planning & Development Division Director

Community Services Department

Dated: May 24, 2013

Interpretation 13-2
INTERIM ZONING FOR PROPERTIES ROLLED BACK FROM A CITY'S SOI

Pursuant to Article 910, Section 110.910.05 of the Washoe County Code Chapter 110 (Development Code), the Planning and Development Division Director of the Community Services Department has the authority to enforce the provisions of the Development Code. In order to appropriately enforce the Development Code, the Director finds it necessary to provide the following interpretation as to the ability to assign regulatory zones to properties that are rolled back from a city's Sphere of Influence (SOI) into Washoe County's jurisdiction during the interim period before regulatory zones can be adopted by the Washoe County Board of County Commissioners.

BACKGROUND

Planning and Development Division staff have identified a need to establish interim regulatory zoning before the County has the opportunity to adopt a permanent regulatory zone. Immediately following official notification of the rollback of property from a City's Sphere of Influence into Washoe County, the County shall initiate amendments to the appropriate Master Plan and Regulatory Zone maps for the property. The Truckee Meadows Regional Plan establishes the appropriate master plan category for the property through an adopted translation table. However, no such translation table exists to establish an interim regulatory zone. Therefore, this interpretation is required to assign a appropriate regulatory zone in order to bridge the gap in time between the rollback and the amendment of the Master Plan and Regulatory Zone maps.

INTERPRETATION

Washoe County will apply the equivalent regulatory zoning identified in Table 1 or Table 2 below for properties immediately following a Sphere of Influence rollback from the Cities of Reno or Sparks. If regulatory zoning was never established within the City's Sphere of Influence by the City, then Washoe County will apply the most current regulatory zoning or land use classification (prior one-map process) that was adopted when the property was previously within the County's jurisdiction.

In situations where the current City regulatory zoning may have multiple equivalent County regulatory zoning choices, County staff will review both the City's previous master plan and zoning, and the previous County master plan category (or land use category) and/or regulatory zone to determine the most appropriate County equivalent regulatory zoning. A property owner may utilize the interim regulatory zoning to establish any use type allowed within that regulatory zone prior to the adoption of regulatory zoning by the Washoe County Board of County Commissioners.

Table 1 - City of Reno to Washoe County Equivalent Zoning Table

Reno Regulatory Zoning	Washoe County Regulatory Zoning
UT40 (Unincorporated - 40 acres)	General Rural (.025 du/ac)
UT10 (Unincorporated – 10 acres)	Low Density Rural (.1 du/ac)
UT5 (Unincorporated – 5 acres)	Medium Density Rural (.2 du/ac)
LLR2.5 (.4 du/ac)	High Density Rural (.4 du/ac)
LLR1 (1 du/ac)	Low Density Suburban (1 du/1ac)
LLR0.5 (2 du/ac)	Low Density Suburban Two (2 du/ac)
SF15 (2.9 du/ac)	Medium Density Suburban (3 du/ac)
SF 9 (4.84 du/ac)	Medium Density Suburban Four (4 du/ac)
SF6 (7.26 du/ac)	High Density Suburban (7 du/ac)
MR14 (14.52 du/ac)	Low Density Urban (10 du/ac)
SF 4 (10.89 du/ac)	Low Density Urban (10 du/ac)
MF21 (21.78 du/ac)	Medium Density Urban (21 du/ac)
MF30 (30.04 du/ac)	High Density Urban (42 du/ac)
CC, AC (Community Commercial, Arterial Commercial)	General Commercial
NC (Neighborhood Commercial)	Neighborhood Commercial/Office (5 du/ac)
I (Industrial)	Industrial
PF (Public Facility)	Public/Semi-Public Facilities
OS (Open Space District)	Open Space, Parks and Recreation
MU, PUD, SPD (Mixed Use District, Planned Unit Development, Specific Plan District)	General Rural, General Rural Agricultural, Public and Semi Public Facilities, Parks and Recreation, Open Space, Low Density Rural, Medium Density Rural, High Density Rural, Low Density Suburban, Low Density Suburban 2, Medium Density Suburban, Medium Density Suburban 4, High Density Suburban, Low Density Urban, Medium Density Urban, High Density Urban, General Commercial, Neighborhood Commercial/Office, Tourist Commercial, Industrial
MH (Manufactured Home District)	TR Overlay District

(Table 2 – Next Page)

Table 2 - City of Sparks to Washoe County Equivalency Table

Sparks Regulatory Zone	Washoe County Regulatory Zone
A-40	General Rural (.025 du/ac), General Rural Agricultural (.025 du/ac), Open Space
A-5	Low Density Rural (.1 du/ac), Medium Density Rural (.2 du/ac), High Density Rural (.4 du/ac)
R1-40 (40,000 s.f.)	Low Density Suburban (1 du/ac)
R1-20 (20,000 s.f.)	Low Density Suburban Two (2 du/ac)
R1-20 (20,000 s.f.)	Medium Density Suburban (3 du/ac)
R1-15 (15,000 s.f.)	Medium Density Suburban (3 du/ac)
R1-9 (9,000 s.f.)	Medium Density Suburban Four (4 du/ac)
R1-7 (7,000 s.f.)	High Density Suburban (7 du/ac)
R1-6 (6,000 s.f.)	High Density Suburban (7 du/ac)
R2 Multiple Family Residential (14.5)	Low Density Urban (10 du/ac)
R3 Multiple Family Residential (19.8)	Medium Density Urban (21 du/ac)
R4 Multiple Family Residential	Medium Density Urban (21 du/ac)
R5 Multiple Family Residential (43.5)	High Density Urban (42 du/ac)
C2 (General Commercial)	General Commercial
C1 (Neighborhood Commercial)	Neighborhood Commercial/Office (5 du/ac)
PO (Professional Office)	Neighborhood Commercial/Office (5 du/ac)
TC (Tourist Commercial)	Tourist Commercial
I (Industrial)	Industrial
IR (Restricted Industrial)	Industrial
Public Facilities	Public and Semi-Public Facilities
Public Facilities	Parks and Recreation

LIMITATIONS OF INTERPRETATION

This interpretation supersedes Interpretation 11-5 dated June 14, 2011 of Washoe County Code Chapter 110 and shall be in effect unless and until a subsequent interpretation concerning the subject matter is made by the Planning and Development Division Director of the Community Services Department, the interpretation is reversed through a successful appeal pursuant to Article 910 of the Development Code, or the Washoe County Code is amended to include the subject matter referenced in this interpretation.

/s/

Bill Whitney, Planning and Development Division Director
Community Services Department

Dated: September 10, 2013

Interpretation 14-1

DRIVEWAYS TO A PERMITTED RESIDENCE LOCATED IN A SENSITIVE STREAM ZONE BUFFER AREA

Washoe County Code Section 110.914.05(c) gives the Director of Planning and Development Division the authority "to interpret the provisions of the Development Code."

CODE SECTION IN QUESTION

Section 110.418.25(b) Permitted Uses Requiring A Board of Adjustment Approved Special Use Permit Subject to the Provisions of Article 810, Special Use Permits. Subject to the regulatory zone in effect for the property establishing the uses as specified in Article 302, Allowed Uses, all new use types may be permitted in the sensitive stream zone buffer area pursuant to a special use permit being issued by the Washoe County Board of Adjustment according to the provisions of Article 810, Special Use Permits, and this article. The special use permit requirement is also applicable to construction or enlargement of any public or private roads, **driveway**, structure or facility including drainage facilities, water conveyance structures, dams, trails, and any public or private utility facility used to provide transportation, electric, gas, water, telephone, telecommunication or other services. New residential, commercial and industrial subdivisions processed in accordance with Article 608, Tentative Subdivision Maps, shall not require the concurrent processing of a special use permit, as long as the "Special Review Considerations" of this article are addressed in the tentative subdivision map review. Any construction in the sensitive stream zone buffer area will require submission of a grading plan showing compliance with applicable best management practices as defined by the Washoe County Department of Public Works to minimize stream bank and stream bed erosion. The grading plan shall also be designed to prevent construction drainage and materials from increasing sedimentation impacts to the stream environment and to minimize impervious surfaces. [**Bold** Emphasis Added]

BACKGROUND

Washoe County Code Section 110.418.25(a), Allowed Uses, provides that "Single-family, detached residential uses and all related accessory uses associated with the single family residence…(and)...Attached or detached accessory dwellings in conformance with Article 306, Accessory Uses" may be constructed as an allowed use within a sensitive stream zone buffer area. These residential buildings and uses may be built in a sensitive stream zone as an allowed use, that is, they do not require a special use permit to be constructed. It is appropriate, therefore, to consider driveways accessing or serving allowed residential buildings and uses as a

"related accessory use." As a result, this interpretation allows driveways accessing or serving allowed residential buildings and uses to be constructed within a sensitive stream zone buffer area without a special use permit. This interpretation does not extend to include driveways within a sensitive stream zone buffer area that provide access or service to other parcels not in the same ownership, that do not provide access or service to allowed residential buildings or uses on the parcel, or that will extend across or into the critical stream zone buffer area.

INTERPRETATION

This interpretation allows driveways accessing or serving allowed residential buildings and uses to be constructed within a sensitive stream zone buffer area without a special use permit. This interpretation does not extend to include driveways within a sensitive stream zone buffer area that provide access or service to other parcels not in the same ownership, that do not provide access or service to allowed residential buildings or uses on the parcel, or that will extend across or into the critical stream zone buffer area.

LIMITATIONS OF INTERPRETATION

This interpretation shall supersede all previous interpretations of Washoe County Chapter 110 (Development Code) concerning the above referenced subject and be in effect unless and until a subsequent interpretation concerning the above referenced subject is made by the Director of Planning and Development Division, the interpretation is reversed through a successful appeal pursuant to Article 808 (Administrative Permits), the interpretation is otherwise invalidated pursuant to law, or the Development Code is amended to incorporate the subject matter referenced in this interpretation.

/s/

William Whitney, Director, Planning & Development Division

Dated: July 30, 2014

Interpretation 14-2
PERIODIC REVIEW OF CONDITIONS FOR AGGREGATE FACILITIES

Washoe County Code (WCC) Section 110.914.05(c) gives the Director of the Planning & Development Division, Washoe County Community Services Department, (Director) "the authority to interpret the provisions of the Development Code" (Washoe County Code Chapter 110).

CODE SECTION IN QUESTION [**Bold** emphasis added]

Section 110.332.40 Periodic Review of Conditions. For aggregate facilities approved for a period of more than five (5) years, **a review of the conditions of approval shall occur at least every five (5) years from the initial special use permit approval date to ensure that the conditions of approval adequately provide for compatibility between aggregate operations and surrounding land uses**. Enforcement of this provision shall be accomplished as follows:

(a) The owner and/or operator of any aggregate facility approved without a review date shall submit a request to the Planning & Development Division for a review of conditions within one hundred eighty (180) days of the effective date of this article (November 1, 1998). At this review hearing and at each hearing thereafter, a date shall be established for the next scheduled review of conditions. In no case shall the time between reviews be more than five (5) years. **The owner and/or operator shall request these reviews prior to one hundred eighty (180) days of the date set at the previous review.**

(b) The owner and/or operator of any aggregate facility seeking an extension of an approved special use permit shall request an extension and review of conditions no less than one hundred eighty (180) days prior to the expiration of the special use permit. The extension shall consider the required findings and special considerations for aggregate operations to ensure that the conditions of approval adequately provide for compatibility between aggregate operations and surrounding land uses.

BACKGROUND

This section of the Development Code was amended by Ordinance 1378, effective on August 1, 2008, to remove text which stipulated that the Washoe County Planning Commission would hear the required review of conditions of approval for aggregate facilities. The amendment was initiated by the Planning Commission after several aggregate facility reviews resulted in a simple approval of the review with no modifications to the approved conditions of approval. The Planning Commission believed that a simple approval review was better suited for staff, and not for the Commission. However, the code amendment failed to capture and codify this direction from the Commission.

The Development Code no longer specifies how the review is to occur, nor does the Code specify which person or agency will approve the review with or without potential modification to the conditions of approval. This interpretation will provide a two-step process for the review of aggregate facility conditions of approval based on the Planning Commission's intent for the code amendment in 2008.

The Development Code currently requires that any new permanent aggregate facilities be granted a special use permit by the Washoe County Board of Adjustment (see Article 302, Table 110.302.05.4, Table of Uses, Industrial Use Types). However, any review requiring an amendment of conditions will be heard by the body which granted the original special use permit, either the Planning Commission or the Board of Adjustment.

INTERPRETATION

The periodic review of aggregate facility conditions required by WCC Section 110.914.05(c) will most likely occur in one of two ways. First, the aggregate facility owner and/or operator will approach the County based on a prior review which specified the next review time frame. Second, code compliance actions based on complaints will discover that an aggregate facility is past the time period without the required review of its conditions of approval.

In either case, the first step for the review process will be an administrative review hearing by the Director, Planning & Development Division. Division staff will evaluate the aggregate facility's existing conditions of approval in the context of compatibility between the aggregate facility's operations and surrounding land uses. The following will occur during this first step of the aggregate facility review process:

1. The Director will appoint a staff member to conduct the evaluation.
2. The assigned staff member will verify the most recent conditions of approval for the aggregate facility.
3. The staff member will research to determine if any complaints on the aggregate facility's operations were recorded by the following County agencies and, if a complaint was recorded, the outcome of that complaint.
    a. Code compliance staff, Planning & Development Division, Community Services Department.
    b. Engineering staff (traffic and grading), Engineering & Capital Projects Division, Community Services Department.
    c. Air Quality Management Division, Washoe County Health District.
    d. Environmental Health Services Division, Washoe County Health District.
    e. Other agencies deemed appropriate due to special circumstances.
4. The review will include an analysis of WCC Section 110.332.20, Special Review Considerations. These considerations will be reviewed in the following contexts:
    a. Complaints received concerning the aggregate facility's operations and the surrounding land uses, and actions taken on those complaints.
    b. Site inspection for an evaluation of the special review considerations in the context of current operating conditions and physical appearance of the aggregate facility.

    The review will include whether the aggregate facility's conditions of approval require modification in order to assure that future similar complaints are avoided or minimized, or to address matters viewed during the site inspection. Modification of conditions may include new or amended conditions, or removal of conditions.
5. The staff member will prepare an administrative review report for the Director with an evaluation of the aggregate facility's conditions of approval in the context of compatibility between the aggregate facility's operations and surrounding land uses, based on the review outlined in item 4 above. The report will determine whether the conditions of approval are adequate and can remain unchanged, if one or more of the conditions

require amendments, or if additional conditions are warranted. Based on the report's conclusions, the staff member will recommend one of the following:

a. Aggregate facility conditions of approval should remain unchanged, and that a new required review date be established 5 years from the date the Director will approve the review; or,

b. One or more of the aggregate facility conditions of approval require amendment, and/or one or more conditions of approval must be added or deleted. The report must identify all proposed changed conditions.

6. The staff member will arrange a date and time for the administrative review hearing with the Director. Notice cards for the hearing will be prepared and mailed to property owners within 500 feet of the aggregate facilities property. The notice card will specify the date, time and location of the administrative review hearing, will provide information on the purpose and manner of the aggregate facility review, will specify how and when the administrative review report will be available for the public, and will solicit comments on the review.

   a. The report will be provided to the Director for review at least 10 days before the hearing date.

   b. The administrative review report must be available to the public no less than 10 days before the hearing date.

   c. Comments may be in person at the hearing, or in writing to the Director no less than three working days before the hearing date.

7. The Director will conduct the administrative review hearing in a manner conducive to listening to any public who attend and desire to comment on the aggregate facility's operations or conditions of approval. The Director will review any written comments in public during the hearing. The hearing is not subject to the Nevada Open Meeting Law. Based on a review of the report and any comments received, the Director will do one of the following:

   a. Determine whether the conditions of approval are to remain unchanged. If so, then the Director will outline the basis of this decision for the record. The staff member will prepare a letter to the aggregate facility owner and/or operator providing the Director's decision and the basis for the decision.

      The letter, once signed by the Director, will be sent to any person who requests a copy. The letter will be posted to the Division's internet web page, and will be filed with the Secretary of the either the Planning Commission or the Board of Adjustment (whichever Board approved the original Special Use Permit).

      The Director's approval is final unless appealed pursuant to WCC Article 912 (Establishment of Commissions, Boards and Hearing Examiners) or Article 914 (Establishment of Department).

   b. Initiate an Amendment of Conditions if conditions of approval should be changed, added or deleted. The Director will outline the basis of this decision for the record, and this decision will form the basis for the Amendment of Conditions. The staff member will prepare a memorandum to either the Planning Commission or the Board of Adjustment (whichever Board approved the original Special Use Permit) providing the Director's decision and the basis for the decision.

      The Amendment of Conditions is based on the Special Use Permit originally approved for the aggregate facility, as amended, and constitutes the second step of the aggregate facility review process. The Amendment of Conditions will be processed at no charge to the aggregate facility owner and/or operator.

The second step of the aggregate facility review process is the Amendment of Conditions process before either the Planning Commission or the Board of Adjustment, whichever Board approved the original Special Use Permit. The staff member assigned to complete the report in the first step of the review process will be assigned the Amendment of Conditions case and follow the procedures outlined in Article 810 (Special Use Permits). The Planning Commission or Board of Adjustment's action will include a new required review date set for 5 years from the date of the Commission's action.

LIMITATIONS OF INTERPRETATION

This interpretation shall supersede all previous interpretations of the Development Code concerning this subject matter and will remain in effect until one of the following occurs:

1. A subsequent interpretation concerning this subject matter is made by the Director;
2. The interpretation is reversed through a successful appeal pursuant to WCC Article 912 (Establishment of Commissions, Boards and Hearing Examiners) or Article 914 (Establishment of Department);
3. The interpretation is otherwise invalidated pursuant to law; or,
4. The Development Code is amended to incorporate this subject matter.

William Whitney

William Whitney, Director, Planning & Development Division
Dated: November 10, 2014