DMV

Nevada Department of Motor Vehicles

REGISTRATION and TITLE GUIDE

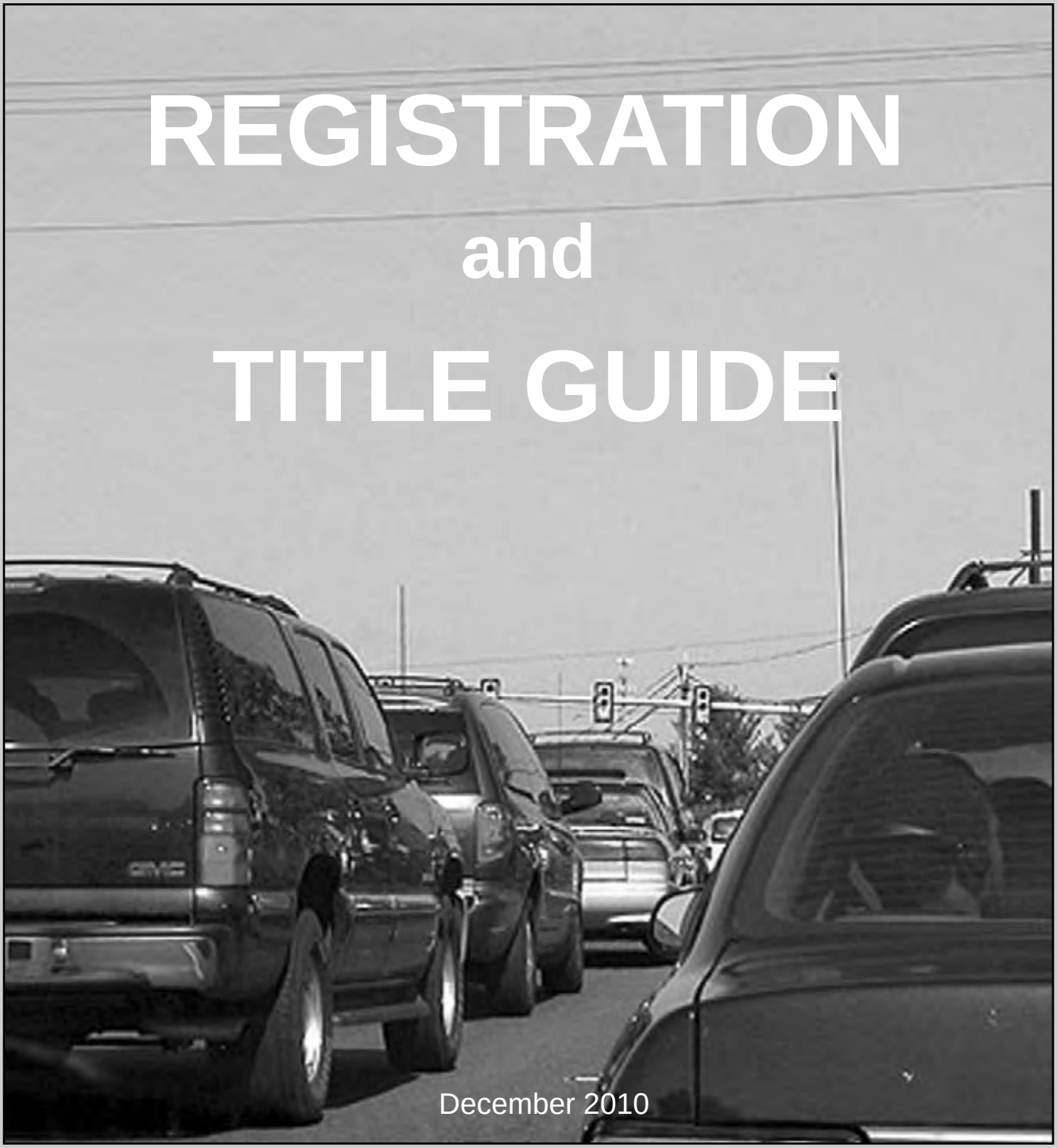

December 2010

PREFACE

The Nevada Department of Motor Vehicles has prepared this guide to assist the motor vehicle industry when conducting business with the Department. It was created as an informational and instructional reference, and attention to the detailed information and examples will ensure proper completion of forms required to register and/or title vehicles in the State of Nevada.

Familiarity with the occupational licensing information and compliance with the licensing requirements will ensure that the business records on file with the Department are accurate and that they reflect the correct status of a business license. A vehicle industry occupational license is considered a privileged license. The business principal is responsive for compliance with all requirements pertaining to the documents submitted to the Department.

If you have any suggestions that may help improved this guide, please provide them in writing to:

Nevada Department of Motor Vehicles
Management Services and Programs Division
Vehicle Programs
555 Wright Way
Carson City, NV 89711

Most of the forms are available on the DMV website at:
http://www.dmvnv.com/dmvforms.htm

TABLE OF CONTENTS

SECTION I – GENERAL INFORMATION

Guidelines I-1
Vehicle Identification Number Information I-2
Importance of Accuracy I-3
Notaries Public I-4
Attempt to Contact I-5
Motor Homes I-6
Transmittals to the Department I-8
Short-Term Lessors I-10

SECTION II – OWNERSHIP DOCUMENTS AND FORMS

Manufacturer's Certificate of Origin II-1
Nevada Certificate of Title II-6
Duplicate Certificate of Title II-30
Lost Title Affidavit II-31
Odometer Mileage Disclosure II-31
Leased Vehicles II-32
Repossessed Vehicles II-32
Unrecovered Stolen Vehicles II-32
Miles vs. Kilometers II-32
Secure Power of Attorney II-33
Salvage Titles II-37
Out-of-State Salvage Certificates II-39
Retention of Salvage Vehicles II-39
Authorization for Vehicle Restoration II-39
Certificate of Inspection / Affidavit of Vehicle Construction (VP-64) II-43
Certificate of Inspection / Affidavit of Motorcycle/Trimobile Construction (VP-64M) II-47
Certificate of Inspection and Affidavit of Trailer Construction (VP-223) II-51
Certificate of Inspection For Rebuilt Vehicles (Not Salvage) (VP-64A) II-54
Vehicle Inspection Certificate II-58
Motorcycle Highway Use Affidavit (VP-254) II-61
Title Fees II-65

SECTION III – COMPLETING OWNERSHIP DOCUMENTS

Dealer's Report of Sale III-1
Lease Terminations III-9
Lease Assumptions III-10
Selling Governmental Agency Vehicles III-10

Bill of Sale III-12
Dealer Reassignment of Title III-14
Lien Release/Satisfaction of Lien III-16
Erasure Affidavit III-18
Affidavit for Transfer of Title for Estates under $20,000 ..... III-20
One And the Same Affidavit III-23
Repossession Affidavit III-24
Trusts III-28
Trustee Appointment and Powers Affidavit III-28
Power of Attorney III-30
Transfer on Death III-32

SECTION IV – US MILITARY REGISTRATION AND TITLES

Foreign and Gray Market Vehicles IV-1
Miles vs. Kilometers IV-2
Canadian Vehicles IV-2
U.S. Government Contact Information IV-3
Canadian Government Contact Information IV-4
Foreign Embassy Contacts IV-5
Military Contacts IV-5
U.S. Military Registration and Titles IV-6

SECTION V – REGISTRATION AND TITLE INFORMATION

General Registration Information V-1
Vehicle Registration Fees V-2
Governmental Services Taxes V-3
Supplemental Governmental Services Taxes V-3
Prison Industry Fee V-3

SECTION VI – Movement Permits

Fifteen-Day Special Drive-Away Permit VI-1
Dealer Placard VI-4

SECTION VII – FINANCIAL INSTITUTION INFORMATION

Recording a Lien VII-1

SECTION VIII – RECORDS SECTION

Accessing Motor Vehicle Registration/Title Information VIII-1
Application for Records Service VIII-2
Affidavit VIII-3
Records Section Fee Schedule VIII-5
Vehicle Registration, Title and History Information VIII-6

SECTION IX – EMISSION CONTROL

Summary IX-1
Vehicle Ratings IX-1
Test Procedures IX-2
Exhaust Gas Standards IX-2
Waiver Requirements IX-2
Diesel Vehicles Requiring Emission Inspection IX-3
Diesel Vehicles Not Requiring Emission Inspection IX-3
Smoke Hotline IX-4
Vehicles For Sale IX-4
Licensee Overview IX-4
Fee Schedules IX-5
Contact Agency IX-5

SECTION X – OCCUPATIONAL AND BUSINESS LICENSING

Vehicle Industry Licensing X-1
Being Contacted by the Department X-2
Business Information X-3
Application for Business License X-6
Dealer, Rebuilder, Lessor, Manufacturer, Distributor X-7
Vehicle Broker X-9
Bond Requirements for Business License X-22
Surety Bond X-22
Deposit in Lieu of Bond X-23
Release of Deposit in Lieu of Bond X-23
Deposit Release Application X-26
Insurance Requirements for Business Licensing X-27
Certificate of Insurance X-28
Sample Business License X-30
Temporary Location License X-31
Application for Temporary Location License X-33
Sample Temporary Location License X-35
Licensing of an Additional Location X-36
Change of Business Principal Information X-37
Adding a Business Principal X-37

Removing a Business Principal X-37
Change of Business Address X-38
Change of Physical Address X-38
Change of Mailing Address X-39
Renewal of Business License X-40
Business License Plates X-42
License Plate Display X-42
Business License Plates Usage X-42
Nevada Loan License Plates X-43
Supplemental Loan License Plates X-44
Business License Plates Issued by Other States X-44
Going out of Business X-45
Out-of-Business Memorandum X-46
Requests for Extension of Time for Submitting DRS X-47
Application for Extension of Time for Submitting DRS X-48
Authorizing an Employee to Conduct Business X-49
Letter of Authorization X-50
Occupational Salesman Licensing X-51
Occupational Salesman Licensing Fees X-52
Sample Salesman License X-53
Certificate of Employment X-54
Licensee/Registrant Acknowledgement X-55
Frequently Asked Questions X-56

SECTION XI

Glossary XI-1
Index XI-5

SECTION I

GENERAL INFORMATION

GUIDELINES

- Always type or print in black or dark blue ink.
- Owner's full legal name and address information must be recorded on registration and title documents exactly as it reads on the owner's driver's license.
- Ensure the Vehicle Identification Number (VIN), year, make, odometer readings and registered owner and legal owner information are consistent on all documents.
- Signatures must always be handwritten, unless waived by the Department because the submittal is done by electronic means. A printed release will not be accepted unless accompanied by a notarized or witnessed statement (from the person in question) stating the signature is a legal signature.
- Do not use correction fluid or correction tape.
- Do not alter any information on the documents.
- A release should be the same as it appears on title documents, i.e., Elizabeth should sign as Elizabeth.
- All documents must be originals, unless certified to be true copies of the original documents.

VEHICLE IDENTIFICATION NUMBER INFORMATION

Since 1954, American automobile manufacturers have used a Vehicle Identification Number (VIN) to identify and describe a vehicle.

Since 1981, all manufacturers of vehicles sold in the United States are required to use a standardized 17-digit VIN structure. When the department is provided with a vehicle with an 18-digit VIN, the VIN will be verified before the vehicle information is entered.

Variations exist in the location of a VIN and in the systems used for a VIN; they may vary by year of manufacture and between manufacturers.

A VIN should always be verified by a physical inspection of the vehicle.

VIN Schematic/Description

Position	Description
1-3	Manufacturer Identifier
4	Restraint System Type
5	Manufacturer Specification
6	Line, Series, Body Type
7-8	Engine Type
9	Check Digit
10	Model Year
11	Assembly Plant
12-17	Production Sequence Number

1st Character:	Identifies the country in which the vehicle was manufactured, i.e., USA (1 or 4), Canada (2), Mexico (3), Japan (J), Korea (K), England (S), Germany (W), Italy (Z).
2nd Character:	Identifies the manufacturer, i.e., Audi (A), BMW (B), Buick (4), Cadillac (6), Chevrolet (1), Chrysler (C), Dodge (B), Ford (F), GM Canada (7), General Motors (G), Honda (H), Jaguar (A), Lincoln (L), Mercedes Benz (D), Mercury (M), Nissan (N), Oldsmobile (3), Pontiac (2 or 5), Plymouth (P), Saturn (8), Toyota (T), VW (V), Volvo (V).
3rd Character:	Identifies the vehicle type or manufacturing division.
4th to 8th Characters:	Identifies vehicle features such as body style, engine type, model, series, etc.
9th Character:	Identifies the VIN accuracy as a check digit.
10th Character:	Identifies the model year, i.e., 1988 (J), 1989 (K), 1990 (L), 1991 (M), 1992 (N), 1993 (P), 1994 (R), 1995 (S), 1996 (T), 1997 (V), 1998 (W), 1999 (X), 2000 (Y), 2001 (1), 2002 (2), 2003 (3), 2004 (4), 2005 (5), 2006 (6), 2007 (7), 2008 (8), 2009 (9), 2010 (A), 2011 (B), 2012 (C), 2013 (D), 2014 (E), 2015 (F), 2016 – 2029 use G thru X – 2030 (Y), and 2031-2039 use digits 1 thru 9.
11th Character:	Identifies the assembly plant for the vehicle.
12th to 17th Characters:	Identifies the sequence of the vehicle for production as it rolled off of the manufacturer's assembly line.

IMPORTANCE OF ACCURACY

The Department of Motor Vehicles uses the VIN as the primary identifier for entry and retrieval of records. It is therefore critical that all documents are completed using the correct VIN.

TO AVOID ERRORS:

- Use the entire VIN at all times.
- Ensure the VIN is entered or recorded accurately. It is best to use block letters.
- If the VIN is handwritten, try to avoid the following most common errors:

LETTER	MAY BE MISTAKEN FOR
B	13 or 8
D	0
G	6 or C
J	T or I or 5
R	K
S	5
Y	4 or H
Z	2 or a 7 on a line

"I" and "1" are often confused. The letter "I" is rarely used in a VIN.

The letter "O" is never used in a VIN, with the exception of state assigned VINs, such as those that are assigned by the states of Colorado (i.e., COLO123456) or Missouri (DR000000MO or DRMVB0000000000MO).

NOTARIES PUBLIC

A licensed Nevada dealer's signature is not required to be acknowledged by a Notary Public on documents the dealer must file with the Department, except in regard to deposit in lieu of a bond. Nevada Revised Statutes (NRS) 482.3275

If a document must be notarized, the provisions of NRS 240.010 through 240.150 must be followed.

A Notary Public may not perform any act authorized by NRS 240.065 if he or she:

1. Executed or is named in the instrument acknowledged or sworn to;

2. Will receive directly from a transaction relating to the instrument any commission, fee, advantage, right, title or interest, property or other consideration in excess of the authorized fees; or

3. Is related to the person whose signature is to be acknowledged or sworn to as a spouse, sibling, or lineal ancestor or descendant.

ATTEMPT TO CONTACT

If the Department of Motor Vehicles requires evidence of an "Attempt to Contact" the owner or lienholder of a vehicle, you must do the following:

- Write to the owner of record asking them to sign the enclosed documents (Bill of Sale, Application for Duplicate Title etc., depending on the requirements) in front of a Notary or to contact you. Caution: Do not mail original ownership documents that are in your possession. Mail photocopies of the ownership documents.

- If you need a signature on an original document, and it is a secure document (i.e., Secure Power of Attorney, Title) a photocopy is not acceptable.

- Send the letter by "Certified Mail – Return Receipt Requested." Keep the payment receipt, issued to you by the Post Office, with your records. Retain copies of everything you mail.

- If the letter is returned with a forwarding address filed with the U.S. Postal Service, resend the letter to the forwarding address by "Certified Mail – Return Receipt Requested."

- If the letter is returned to you as "Undeliverable," do not open it; or

- If you receive a signed Post Office Receipt showing the letter was received and fifteen (15) days have passed since the date of receipt:

    - Bring all documents for the vehicle, along with the returned letter or the signed receipt, to the Department of Motor Vehicles.

    - At that time, the Department of Motor Vehicles should be able to assist you with the vehicle registration and titling of the vehicle.

- If the former owner(s) contact you and provide you with the necessary signatures, the receipt or returned letter is not needed.

- Prior to being issued a vehicle registration or title, you will need to have a Vehicle Identification Number Inspection VP-15 completed on the vehicle.

MOTOR HOMES

Motor homes are vehicles described as permanently attached to a chassis and are designed for use as temporary living quarters. Nevada Revised Statutes define three types of motor homes.

Note: The legal maximum width of a recreational vehicle is 102 inches excluding mirrors, lights and other devices required for safety; and an awning and any hardware used to attach the awning, but it cannot extend beyond any mirror.

Mini motor home (NRS 482.066): A vehicular-type unit designed for temporary living quarters for travel, camping or recreational use, which is:

1. A structure attached permanently on a self-propelled chassis; or
2. A portable unit designed to be affixed permanently to a truck chassis with cab, which is designated as a mini motor home by the manufacturer.

Motor home (NRS 482.071): A structure:

1. Attached permanently to a self-propelled motor vehicle chassis;
2. Designed as a temporary dwelling for travel, recreational or camping use; and
3. When assembled for the road, having a maximum body width of 102 inches.

Chassis-mount camper (NRS 482.0151):
A portable unit designed to be permanently affixed to a truck chassis and cab, and so constructed as to provide temporary living quarters for travel, camping or recreational use.

In all cases, the chassis/frame number is used as the vehicle identification number (VIN). The make of the vehicle is the motor home name, not the chassis/frame manufacturer.

Example: Winnebago makes the Itasca and Fleetwood makes the Tioga. The makes are therefore Itasca and Tioga; Winnebago and Fleetwood are not used.

The vehicle year is established by the manufacturer on the vehicle's original documentation.

In all cases, the vehicle length must be included on the registration and title documents as part of the vehicle description.

Recreational park trailer (NRS 482.1005) means a vehicle, which is primarily designed to provide temporary living quarters for recreational, camping or seasonal use and which:

1. Is built on a single chassis mounted on wheels;

2. Has a gross trailer area not exceeding 400 square feet in the set-up mode; and
3. Is certified by the manufacturer as complying with Standard No. A119.5 of the American National Standards Institute.

Note: The Department will only issue a title to a Recreational Park Trailer over 102 inches. Moving a Recreational Park Trailer requires a special movement permit issued by the Department of Transportation.

TRANSMITTALS TO THE DEPARTMENT

Include two copies of the transmittal form, when mailing title documents to the Department. Both copies of the transmittal form will be date stamped upon receipt; one form will be returned to the submitting business and the second retained by the Department for its records.

The transmittal form must be completed in full, and must identify the name and address of the business.

The transmittal form should also be used when resubmitting title documents that were returned by the Department for correction or because of the need for additional information. In cases where title documents are resubmitted, write “RESUBMITTAL” in red across the top of the transmittal form, and include any correspondence provided by the Department. Re-submittals will take priority in processing.

Please note the Department does not supply the transmittal form. However, the sample form details the information that must be provided when submitting title documents to the Department.

TRANSMITTAL FORM
TITLE SECTION

Company Name, Address and Telephone					
Date of Transmittal:			By:		
No	Customer	VIN	Year	Make	Legal Owner
1					
2					
3					
4					
5					
6					
7					
8					
9					
10					
11					
12					

SHORT-TERM LESSORS
6-PERCENT GOVERNMENTAL SERVICES FEE CHARGED ON RENTAL OF PASSENGER VEHICLES

Upon the lease of a passenger car by a short-term lessor in this state, NRS 482.313 requires the short-term lessor to charge and collect from the short-term lessee a fee of 6 percent of the total amount for which the passenger car was leased, excluding any taxes or other fees imposed by a governmental entity.

- The amount of the fee must be included in the lease agreement and listed separately from all other charges.
- The fee must be identified as "Governmental Services Fee" and must be submitted quarterly to the Nevada Department of Taxation.

The Department of Taxation will mail a *Passenger Car, Governmental Services Fee Return* (Form STS) to each short-term lessor prior to the end of each calendar quarter.

The *Passenger Car, Governmental Services Fee Return* (Form STS) must be completed in full by short-term lessors reporting leases of passenger vehicles by listing the total dollar amount of all leases on which the 6-percent fee was charged during the previous calendar quarter. The return form must be filed even if no leases were made or fees collected. Two sets (an original and duplicate) of the return forms must be submitted to the Department of Taxation, along with the remittance of fees, on or before the end of the next month following the end of the calendar quarter.

The records, receipts, invoices and other pertinent papers documenting the leases must be available at all times during normal business hours for examination and copying by the Nevada Department of Taxation or the Nevada Department of Motor Vehicles or its authorized agents.

The records, receipts, invoices and other pertinent papers must be preserved intact for at least four years after the date the record, receipt, invoice or paper was made.

If you have any questions, please contact State of Nevada, Department of Taxation.

- Carson City (775) 684-2000
- Reno (775) 688-1295
- Las Vegas (702) 486-2300

SECTION II

OWNERSHIP DOCUMENTS

AND FORMS

MANUFACTURER'S CERTIFICATE OF ORIGIN
NRS 482.423

Manufacturer's Statement of Origin/Certificate of Origin (MSO/MCO) means a document similar to a certificate of title or certificate of ownership issued by a manufacturer that must be completed and executed by the seller of a new vehicle when the vehicle is sold or leased for a fixed period of more than 31 days for the first time.

The Manufacturer's Certificate of Origin (MCO or MSO) must be assigned by the manufacturer to the dealer, and properly reassigned by the dealer to the purchaser of the vehicle.

The MCO or MSO is a secure document, which means there are security features contained on it that prevent erasing, altering or unauthorized reproduction.

Security features may include:

- Intaglio printing—a printing process where an engraved plate meets the paper under extremely high pressure forcing the paper into the incisions below the surface of the plate.

- High-resolution printing—a printing process that achieves excellent art clarity and detail quality approaching that of the intaglio process.

- Security paper—paper containing a security watermark and/or a security thread.

- Erasure-sensitive background inks—a process whereby the text is printed in a dark color ink over a fine line erasure-sensitive prismatic ink tint.

- Security paper—paper that has been chemically treated to detect chemical alterations.

MANUFACTURER'S CERTIFICATE OF ORIGIN
(FRONT)

The MCO contains the following:

1. Date – The date the MCO was completed by the manufacturer

2. Description of Vehicle – Must be completed by the manufacturer

3. Dealer or Distributor – The name of the dealer or distributor the vehicle was initially delivered to

4. Issuing Manufacturer's Information – The name and address of the manufacturer and the original signature of the manufacturer's authorized representative

CERTIFICATE OF ORIGIN FOR A VEHICLE

DATE (1) INVOICE NO

VEHICLE IDENTIFICATION NO. (2) YEAR (2) MAKE (2)

BODY TYPE (2) SHIPPING WEIGHT (2)

H.P. (S.A.E.) (2) G.V.W.R (2) NO. CYLS. (2) SERIES OR MODEL (2)

I, the undersigned authorized representative of the company, firm or corporation named below, hereby certify that the new vehicle described above is the property of the said company, firm or corporation and is transferred on the above date and under the Invoice Number indicated to the following distributor or dealer.

NAME OF DISTRIBUTOR, DEALER, ETC.

(3)

It is further certified that this was the first transfer of such new vehicle in ordinary trade and commerce.

(4)

BY. _____

(SIGNATURE OF AUTHORIZED REPRESENTATIVE) (AGENT)

_____

CITY - STATE

MANUFACTURER'S CERTIFICATE OF ORIGIN
(BACK)

1. Name and Address: The full legal name and address of the purchaser.

2. Odometer Reading: The current odometer reading for the vehicle.

3. Name of Dealership: The name of the dealer as shown on the front of the MCO.

4. Signature: The signature of the authorized dealer representative.

5. Notarization: Not required to be completed in Nevada.

6. Odometer Disclosure: Required to be completed for a retail sale. A separate federal odometer disclosure statement may be provided in lieu of completing this section.

7. Lienholder: The name and address of the lienholder, if applicable. If there is no lienholder, "None" must appear in this section.

Note: A Manufacturer's Certificate of Origin is invalid if it has been altered in any manner. The reassignments can only be completed between dealers. If the vehicle is sold to an individual, the ownership paper work must be submitted to the Department.

Each undersigned seller certifies to the best of his knowledge, information and belief under penalty of law that the vehicle is new and has not been registered in this or any state at the time of delivery and the vehicle is not subject to any security interests other than those described herein and warrant title to the vehicle.

FOR VALUE RECEIVED I TRANSFER THE VEHICLE DESCRIBED ON THE FACE OF THIS CERTIFICATE TO

DISTRIBUTION-DEALER ASSIGNMENT NUMBER 1

NAME OF PURCHASER(S) _____ (1)

ADDRESS _____ (1)

I certify to the best of my knowledge that the odometer reading is _____ (2) No Tenths

DEALER _____ (3) BY: _____ (4)
NAME OF DEALERSHIP DEALER'S LICENSE NUMBER

Being duly sworn upon oath says that the statements set forth are true and correct. Subscribed and sworn to me

State of _____ (5) before this _____ day of _____ 19 ____

County of _____ _____ Notary Public

USE NOTARIZATION ONLY IF REQUIRED IN TITLING JURISDICTION

DISTRIBUTION-DEALER ASSIGNMENT NUMBER 2

NAME OF PURCHASER(S) _____

ADDRESS _____

I certify to the best of my knowledge that the odometer reading is _____ No Tenths

DEALER _____ BY: _____
NAME OF DEALERSHIP DEALER'S LICENSE NUMBER

Being duly sworn upon oath says that the statements set forth are true and correct. Subscribed and sworn to me

State of _____ before this _____ day of _____ 19 ____

County of _____ _____ Notary Public

USE NOTARIZATION ONLY IF REQUIRED IN TITLING JURISDICTION

DISTRIBUTION-DEALER ASSIGNMENT NUMBER 3

NAME OF PURCHASER(S) _____

ADDRESS _____

I certify to the best of my knowledge that the odometer reading is _____ No Tenths

DEALER _____ BY: _____
NAME OF DEALERSHIP DEALER'S LICENSE NUMBER

Being duly sworn upon oath says that the statements set forth are true and correct. Subscribed and sworn to me

State of _____ before this _____ day of _____ 19 ____

County of _____ _____ Notary Public

USE NOTARIZATION ONLY IF REQUIRED IN TITLING JURISDICTION

DISTRIBUTION-DEALER ASSIGNMENT NUMBER 4

NAME OF PURCHASER(S) _____

ADDRESS _____

I certify to the best of my knowledge that the odometer reading is _____ No Tenths

DEALER _____ BY: _____
NAME OF DEALERSHIP DEALER'S LICENSE NUMBER

Being duly sworn upon oath says that the statements set forth are true and correct. Subscribed and sworn to me

State of _____ before this _____ day of _____ 19 ____

County of _____ _____ Notary Public

USE NOTARIZATION ONLY IF REQUIRED IN TITLING JURISDICTION

ODOMETER DISCLOSURE FOR RETAIL SALE

Federal law requires you to state the odometer mileage in connection with the transfer of ownership. Failure to complete or providing a false statement may result in fines and or imprisonment.

I certify to the best of my knowledge that the odometer reading is the actual mileage of the vehicle unless one of the following statements is checked. Odometer Reading _____ No Tenths. ☐ The mileage stated is in excess of its mechanical limits. ☐ The odometer reading is not the actual mileage.

WARNING ODOMETER DISCREPANCY

Signature of Seller(s) _____ (6) Date of Statement _____ Date of Sale _____

Printed Name(s) of Seller(s) _____ Dealer's No. _____

Signature of Purchaser(s) _____

Printed Name(s) of Purchaser(s) _____

Company Name (If Applicable) _____

Address of Purchaser(s) _____

Being duly sworn upon oath says that the statements set forth are true and correct Subscribed and sworn to me

before this _____ day of _____ 19 ____

_____ Notary Public

State of _____

County of _____

USE NOTARIZATION ONLY IF REQUIRED IN TITLING JURISDICTION

LIENHOLDER

1st lien in favor of _____

whose address is _____ (7)

2nd lien in favor of _____

whose address is _____

NEVADA CERTIFICATE OF TITLE
NRS 482.285 and 482.400

There are currently several valid styles of Nevada Certificates of Title (Form VP-2) in circulation. For the purpose of this guide, only the four most recent styles will be addressed (Revision 8/10, 1/06, 10/01, and 10/96).

The registered owner or seller must sign the Certificate of Title exactly as the name appears on the face of the Certificate of Title:

- If there is more than one registered owner or seller, joined by “and,” the signature of each registered owner or seller is required.

- If there is more than one registered owner or seller, joined by “and/or” or “or,” only one of the owner or seller’s signature is required.

- If there is more than one registered owner or seller, and not joined by “and” or “and/or” or “or” the signature of each registered owner or seller is required. The Department considers no name indicator as “and” in these cases.

- If the owner or seller information is in the name of a business, the name of the business must appear along with the signature of an authorized business representative.

Buyer information must be completed indicating exactly how the new Certificate of Title is to read, and it must show the buyer’s full legal name.

NEVADA CERTIFICATE OF TITLE
(FORM VP-2)
REVISION 8/10 (FRONT)

1. Vehicle Information: The vehicle identification number, year, make, model and vehicle body.

2. Title Number: The number assigned at the time the title is created.

3. Date Issued: The date the title was issued.

4. Odometer Miles: The reading indicated on the vehicle's odometer apparatus.

5. Fuel Type: The type of fuel the vehicle uses.

6. Sales Tax Paid: Nevada does not print this information at this time.

7. Empty Weight: The actual weight of the vehicle when empty.

8. Gross Weight: The maximum recommended weight of the vehicle when full (passengers, luggage, etc.).

9. GVWR: The gross vehicle weight rating (the weight of the vehicle plus the vehicle's useful or maximum-load).

10. Vehicle Color: Nevada does not print this information at this time.

11. Odometer Brand: The actual status of the odometer reading.

    A. Actual Mileage; the miles shown on the odometer are the exact miles the vehicle has been driven, required for all vehicles that are nine years and newer and do not meet exemptions in Title 49 Odometer Disclosure.

    B. Exceeds Mechanical Limits; the vehicle has traveled more miles than the odometer is capable of showing.

    C. Warning Odometer Discrepancy; the odometer reading is not the actual mileage (the odometer may have been broken or a new odometer may have been installed).

    D. Exempt; the vehicle is ten years old or older or meets the exemption qualifications in Title 49 Odometer Disclosure.

12. Brands: The description of a vehicle. When more than one brand applies, those brands will be listed:

    - Flood Damage

- Lemon Law Buyback
- Non-Rebuildable
- Non-U.S. Vehicle
- Not Street Legal
- Rebuilt
- Total Loss
- Reconstructed
- Specially Constructed

13. Owner(s) Name and Address: The name and address of the person or persons the Certificate of Title is issued to.

14. Lienholder(s) Name and Address: The name and address of the legal owner of the vehicle who holds the security interest if different from number 13.

15. Lienholder(s) Release: All Nevada Certificates of Title that show a lienholder require a release of lien to transfer ownership. The lienholder or authorized agent of the lienholder must complete this section. The signature of the lienholder or the authorized agent and the date of the signature are required to complete the release. If the lienholder is a business, the business name must appear along with the signature of an authorized representative of the business.

16. Government owned vehicles subject to registration in Nevada and sold or liquidated through a licensed Nevada auction should NOT stamp on to the title. In the area indicated by #16 write SOLD THROUGH, AUCTION NAME and the initials of the authorized representative of the auction company.

17. Full Legal Name and Address of Buyer(s): Record the registered owner's full legal name exactly as it appears on the customer's driver's license, identification card, or business license. This is the name that will be recorded on the vehicle registration certificate and Certificate of Title when created. Customers purchasing a vehicle(s) for a business are not required to present their business license.

    Note:
    - If the registration is to read "doing business as" enter "DBA" preceding the business name.
    - If the vehicle is leased, the words "Lessee" and "Lessor" must be included prior to the full legal name
    - If there is more than one Lessee, separate the Lessees with a semi-colon ";".

18. Nevada Driver's License, Identification Card Number, or FEIN for businesses: Enter the number based on the document presented during the purchase transaction. The DMV will use these numbers to ensure the full legal name of the owner is placed on the registration and title.

Note:

- If the customer does not have a Nevada driver's license or identification card, "No Nevada DL or ID" must be printed in the registered owner's information area.
- Customers purchasing a vehicle(s) for a business that does not have an FEIN (Federal Employer Identification Number), enter "No FEIN."
- Do not enter or use the customer's social security number.

19. And/Or: If the registration and title are in more than one name, the appropriate box must be marked to indicate "and" or "or." Using "and" will require all persons on the title to sign the title to release interest in the vehicle. "OR" will allow for one person to sign the title to release interest in the vehicle, if there are two or more recorded owners.

20. Odometer Reading: The odometer reading must be recorded exactly as it shows on the vehicle's odometer apparatus, excluding tenths. The seller(s) must complete the Odometer Statement to the best of their knowledge.

21. Odometer Declaration: If the odometer reading is not the actual mileage of the vehicle, one of the statements must be checked. The Certificate of Title will be branded accordingly.

22. Signature and Printed Name of the Seller(s)/Agent/Dealership.

23. DMV issued Dealer's License Number.

24. Date of Sale: The actual date ownership of the vehicle was transferred.

25. Signature and Printed Full Legal Name of the Buyer(s).

Note: Any alteration or erasure voids a Nevada Certificate of Title. The control number in the lower right hand corner of the Certificate of Title is not the title number. The Department uses this number internally.

STATE OF NEVADA
DEPARTMENT OF MOTOR VEHICLES

CERTIFICATE OF TITLE

VIN 1 | 1 YEAR | 1 MAKE | 1 MODEL | 1 VEHICLE BODY | 2 TITLE NUMBER

DATE ISSUED 3 | 4 ODOMETER MILES | 5 FUEL TYPE | 6 SALES TAX PD | 7 EMPTY WT | 8 GROSS WT | 9 GVWR

VEHICLE COLOR 10 | ODOMETER BRAND 11 | BRANDS 12

OWNER(S) NAME AND ADDRESS
13

SAMPLE

LIENHOLDER NAME AND ADDRESS
14

LIENHOLDER RELEASE - INTEREST IN THE VEHICLE DESCRIBED ON THIS TITLE IS HEREBY RELEASED:
15

SIGNATURE OF AUTHORIZED AGENT | DATE

PRINTED NAME OF AGENT AND COMPANY
16 SOLD THROUGH "AUCTION NAME" INITIALS OF REP

FEDERAL AND STATE LAW REQUIRES THAT YOU STATE THE MILEAGE IN CONNECTION WITH THE TRANSFER OF OWNERSHIP. FAILURE TO COMPLETE OR PROVIDING A FALSE STATEMENT MAY RESULT IN FINES AND/OR IMPRISONMENT.
The undersigned hereby certifies the vehicle described in this title has been transferred to the following buyer(s):

17 Printed Full Legal Name of Buyer | 18 Nevada Driver's License Number or Identification Number | 19 ☐ AND ☐ OR

Printed Full Legal Name of Buyer | Nevada Driver's License Number or Identification Number

Address | City | State | Zip Code

I certify to the best of my knowledge the odometer reading is the actual mileage of the vehicle unless one of the following statements is checked.

20 ODOMETER READING | NO TENTHS 21
☐ The mileage stated is in excess of its mechanical limits.
☐ The odometer reading is not the actual mileage. WARNING: ODOMETER DISCREPANCY.
☐ Exempt - Model year over 9 years old.

22 Signature of Seller(s)/Agent/Dealership | 22 Printed Name of Seller(s)/Agent/Dealership

I am aware of the above odometer certification made by the seller/agent. ☐ | Dealer's License Number 23 | Date of Sale 24

25 Signature of Buyer | 25 Printed Full Legal Name of Buyer

ACCORDING TO THE RECORDS OF THE DEPARTMENT OF MOTOR VEHICLES, THE PERSON NAMED HEREON IS THE OWNER OF THE VEHICLE DESCRIBED ABOVE, SUBJECT TO LIEN AS SHOWN.

CONTROL NO.
00000000
(THIS IS NOT A TITLE NO.)

VP-2 (Rev. 8/10)

STATE OF NEVADA

ALTERATION OR ERASURE VOIDS THIS TITLE

NEVADA CERTIFICATE OF TITLE
REVISION 8/10 (BACK)

1. Dealer Only First Reassignment of Title: To be completed only by a dealer upon the first reassignment of the Certificate of Title. The dealer's business name and business license number must be recorded, and the reassignment must be completed in the same manner as the assignment on the front of the Certificate of Title.

2. Dealer Only Second Reassignment of Title: To be completed only by a dealer upon the second reassignment of the Certificate of Title. The dealer's business name and business license number must be recorded, and the reassignment must be completed in the same manner as the assignment on the front of the Certificate of Title.

3. Dealer Only Third Reassignment of Title: To be completed only by a dealer upon the third reassignment of the Certificate of Title. The dealer's business name and business license number must be recorded, and the reassignment must be completed in the same manner as the assignment on the front of the Certificate of Title.

4. Lienholder to be recorded: This section must be completed if the new Certificate of Title is to reflect a security interest in the vehicle. The lienholder's name and address must be recorded. If there is no lienholder, "None" must be recorded in this section.

Note: Any alteration or erasure voids a Nevada Certificate of Title. The reassignment on the front of the title (beginning on item 17 on the front of the title) must be completed before the Dealer Only First Reassignment of Title is completed.

1

FIRST REASSIGNMENT DEALER ONLY

FEDERAL AND STATE LAW REQUIRES THAT YOU STATE THE MILEAGE IN CONNECTION WITH THE TRANSFER OF OWNERSHIP. FAILURE TO COMPLETE OR PROVIDING A FALSE STATEMENT MAY RESULT IN FINES AND/OR IMPRISONMENT.
The undersigned hereby certifies the vehicle described in this title has been transferred to the following buyer(s):

Printed Full Legal Name of Buyer — Nevada Driver's License Number or Identification Number — ☐ AND ☐ OR

Printed Full Legal Name of Buyer — Nevada Driver's License Number or Identification Number

Address — City — State — Zip Code

I certify to the best of my knowledge the odometer reading is the actual mileage of the vehicle unless one of the following statements is checked.

ODOMETER READING [ ] NO TENTHS

☐ The mileage stated is in excess of its mechanical limits.
☐ The odometer reading is not the actual mileage. WARNING - ODOMETER DISCREPANCY
☐ Exempt - Model year over 9 yrs. old.

Signature of Seller(s)/Agent/Dealership — Printed Name of Seller(s)/Agent/Dealership
I am aware of the above odometer certification made by the seller/agent. ☐ Dealer's License Number_____ Date of Sale_____

Signature of Buyer — Printed Full Legal Name of Buyer

2

SECOND REASSIGNMENT DEALER ONLY

FEDERAL AND STATE LAW REQUIRES THAT YOU STATE THE MILEAGE IN CONNECTION WITH THE TRANSFER OF OWNERSHIP. FAILURE TO COMPLETE OR PROVIDING A FALSE STATEMENT MAY RESULT IN FINES AND/OR IMPRISONMENT.
The undersigned hereby certifies the vehicle described in this title has been transferred to the following buyer(s):

Printed Full Legal Name of Buyer — Nevada Driver's License Number or Identification Number — ☐ AND ☐ OR

Printed Full Legal Name of Buyer — Nevada Driver's License Number or Identification Number

Address — City — State — Zip Code

I certify to the best of my knowledge the odometer reading is the actual mileage of the vehicle unless one of the following statements is checked.

ODOMETER READING [ ] NO TENTHS

☐ The mileage stated is in excess of its mechanical limits.
☐ The odometer reading is not the actual mileage. WARNING - ODOMETER DISCREPANCY
☐ Exempt - Model year over 9 yrs. old.

Signature of Seller(s)/Agent/Dealership — Printed Name of Seller(s)/Agent/Dealership
I am aware of the above odometer certification made by the seller/agent. ☐ Dealer's License Number_____ Date of Sale_____

Signature of Buyer — Printed Full Legal Name of Buyer,

3

THIRD REASSIGNMENT DEALER ONLY

FEDERAL AND STATE LAW REQUIRES THAT YOU STATE THE MILEAGE IN CONNECTION WITH THE TRANSFER OF OWNERSHIP. FAILURE TO COMPLETE OR PROVIDING A FALSE STATEMENT MAY RESULT IN FINES AND/OR IMPRISONMENT.
The undersigned hereby certifies the vehicle described in this title has been transferred to the following buyer(s):

Printed Full Legal Name of Buyer — Nevada Driver's License Number or Identification Number — ☐ AND ☐ OR

Printed Full Legal Name of Buyer — Nevada Driver's License Number or Identification Number

Address — City — State — Zip Code

I certify to the best of my knowledge the odometer reading is the actual mileage of the vehicle unless one of the following statements is checked.

ODOMETER READING [ ] NO TENTHS

☐ The mileage stated is in excess of its mechanical limits.
☐ The odometer reading is not the actual mileage. WARNING - ODOMETER DISCREPANCY
☐ Exempt - Model year over 9 yrs. old.

Signature of Seller(s)/Agent/Dealership — Printed Name of Seller(s)/Agent/Dealership
I am aware of the above odometer certification made by the seller/agent. ☐ Dealer's License Number_____ Date of Sale_____

Signature of Buyer — Printed Full Legal Name of Buyer

4

LIEN

LIENHOLDER TO BE RECORDED

FEIN_____

Printed Full Legal Name of Lienholder_____
(if no lienholder write "NONE")

Address_____
Street — City — State — Zip Code

ALTERATION OR ERASURE VOIDS THIS TITLE

NEVADA CERTIFICATE OF TITLE
(FORM RD-2)
REVISION 1/06 (FRONT)

1. Vehicle Information: The vehicle identification number, year, make, model and vehicle body.

2. Title Number: The number assigned at the time the title is created.

3. Date Issued: The date the title was issued.

4. Odometer Miles: The reading indicated on the vehicle's odometer apparatus.

5. Fuel Type: The type of fuel the vehicle uses.

6. Sales Tax Paid: the "Y" or "N" indicates whether sales tax was paid for the vehicle.

7. Empty Weight: The actual weight of the vehicle when empty.

8. Gross Weight: The maximum recommended weight of the vehicle when full (passengers, luggage, etc.).

9. GVWR: The gross vehicle weight rating (the weight of the vehicle plus the vehicle's useful or maximum-load).

10. Vehicle Color: The color of the vehicle.

11. Odometer Brand: The actual status of the odometer reading.

    A. Actual Mileage; the miles shown on the odometer are the exact miles the vehicle has been driven, required for all vehicles that are nine years and newer and do not meet exemptions in Title 49 Odometer Disclosure.

    B. Exceeds Mechanical Limits; the vehicle has traveled more miles than the odometer is capable of showing.

    C. Warning Odometer Discrepancy; the odometer reading is not the actual mileage (the odometer may have been broken or a new odometer may have been installed).

    D. Exempt; the vehicle is ten years old or older or meets the exemption qualifications in Title 49 Odometer Disclosure.

12. Brands: The description of a vehicle. When more than one brand applies, those brands will be listed:

- Flood Damage
- Lemon Law Buyback
- Non-Rebuildable
- Non-U.S. Vehicle
- Not Street Legal
- Rebuilt
- Salvage
- Dis-Salvage
- Total Loss
- Reconstructed
- Specially Constructed

13. Owner(s) Name and Address: The name and address of the person or persons the Certificate of Title is issued to.

14. Lienholder(s) Name and Address: The name and address of the legal owner of the vehicle who holds the security interest if different from number 13.

15. Lienholder(s) Release: All Nevada Certificates of Title that show a lienholder require a release of lien to transfer ownership. The lienholder or authorized agent of the lienholder must complete this section. The signature of the lienholder or the authorized agent and the date of the signature are required to complete the release. If the lienholder is a business, the business name must appear along with the signature of an authorized representative of the business.

16. Government owned vehicles subject to registration in Nevada and sold or liquidated through a licensed Nevada auction should NOT stamp on to the title. In the area indicated by #16 write SOLD THROUGH, AUCTION NAME and the initials of the authorized representative of the auction company.

17. Full Legal Name and Address of Buyer(s): Record the registered owner's full legal name exactly as it appears on the customer's driver's license, identification card, or business license. This is the name that will be recorded on the vehicle registration certificate and Certificate of Title when created. Customers purchasing a vehicle(s) for a business are not required to present their business license.

    Note:
    - If the registration is to read "doing business as" enter "DBA" preceding the business name.
    - If the vehicle is leased, the words "Lessee" and "Lessor" must be included prior to the full legal name
    - If there is more than one Lessee, separate the Lessees with a semi-colon ";".

18. Nevada Driver's License, Identification Card Number, or FEIN for businesses: Enter the number based on the document presented during the purchase

transaction. The DMV will use these numbers to ensure the full legal name of the owner is placed on the registration and title.

Note:

- If the customer does not have a Nevada driver's license or identification card, "No Nevada DL or ID" must be printed in the registered owner's information area.
- Customers purchasing a vehicle(s) for a business that does not have an FEIN (Federal Employer Identification Number), enter "No FEIN."
- Do not enter or use the customer's social security number.

19. And/Or: If the registration and title are in more than one name, the appropriate box must be marked to indicate "and" or "or." Using "and" will require all persons on the title to sign the title to release interest in the vehicle. "OR" will allow for one person to sign the title to release interest in the vehicle, if there are two or more recorded owners.

20. Odometer Reading: The odometer reading must be recorded exactly as it shows on the vehicle's odometer apparatus, excluding tenths. The seller(s) must complete the Odometer Statement to the best of their knowledge.

21. Odometer Declaration: If the odometer reading is not the actual mileage of the vehicle, one of the statements must be checked. The Certificate of Title will be branded accordingly.

22. Signature and Printed Name of the Seller(s)/Agent/Dealership.

23. DMV issued Dealer's License Number.

24. Date of Sale: The actual date ownership of the vehicle was transferred.

25. Signature and Printed Full Legal Name of the Buyer(s).

Note: Any alteration or erasure voids a Nevada Certificate of Title. The control number in the lower right hand corner of the Certificate of Title is not the title number. The Department uses this number internally.

STATE OF NEVADA
DEPARTMENT OF MOTOR VEHICLES

CERTIFICATE OF TITLE

VIN 1 YEAR 1 MAKE 1 MODEL 1 VEHICLE BODY 1 TITLE NUMBER 2

DATE ISSUED 3 ODOMETER MILES 4 FUEL TYPE 5 SALES TAX PD 6 EMPTY WT 7 GROSS WT 8 GVWR 9

VEHICLE COLOR 10 ODOMETER BRAND 11 BRANDS 12

SAMPLE

OWNER(S) NAME AND ADDRESS
13

LIENHOLDER(S) NAME AND ADDRESS
14

LIENHOLDER(S) RELEASE – INTEREST IN THE VEHICLE DESCRIBED ON THIS TITLE IS HEREBY RELEASED:
15

SIGNATURE OF AUTHORIZED AGENT DATE

PRINTED NAME OR COMPANY STAMP
16 SOLD THROUGH "AUCTION NAME" INITIALS OF REP

FEDERAL AND STATE LAW REQUIRES THAT YOU STATE THE MILEAGE IN CONNECTION WITH THE TRANSFER OF OWNERSHIP. FAILURE TO COMPLETE OR PROVIDING A FALSE STATEMENT MAY RESULT IN FINES AND/OR IMPRISONMENT.
The 17 gned hereby certifies the vehicle described in this title has been transferred to the following buyer(s): 18 19

Printed Full Legal Name of Buyer — Nevada Driver's License Number or Identification Number — ☐ AND ☐ OR

Printed Full Legal Name of Buyer — Nevada Driver's License Number or Identification Number

Address — City — State — Zip Code

I certify to the best of my knowledge the odometer reading is the actual mileage of the vehicle unless one of the following statements is checked.

20 NO TENTHS
ODOMETER READING 22

☐ The mileage stated is in excess of its mechanical limits.
☐ The odometer reading is not the actual mileage. WARNING: ODOMETER DISCREPANCY. 21
☐ Exempt – Model year over 9 years old.

Signature of Seller(s)/Agent/Dealership 22 — Printed Name of Seller(s)/Agent/Dealership 22

I am aware of the above odometer certification made by the seller/agent. ☐ Dealer's License Number 23 Date of Sale 24

25 Signature of Buyer — 25 Printed Full Legal Name of Buyer

ACCORDING TO THE RECORDS OF THE DEPARTMENT OF MOTOR VEHICLES, THE PERSON NAMED HEREON IS THE OWNER OF THE VEHICLE DESCRIBED ABOVE, SUBJECT TO LIEN AS SHOWN.

CONTROL NO.

(THIS IS NOT A TITLE NO.)
0000000B

RD-2 (Rev. 1/06)

ALTERATION OR ERASURE VOIDS THIS TITLE

NEVADA CERTIFICATE OF TITLE

REVISION 1/06 (BACK)

1. Dealer Only First Reassignment of Title: To be completed only by a dealer upon the first reassignment of the Certificate of Title. The dealer's business name and business license number must be recorded, and the reassignment must be completed in the same manner as the assignment on the front of the Certificate of Title.

2. Dealer Only Second Reassignment of Title: To be completed only by a dealer upon the second reassignment of the Certificate of Title. The dealer's business name and business license number must be recorded, and the reassignment must be completed in the same manner as the assignment on the front of the Certificate of Title.

3. Dealer Only Third Reassignment of Title: To be completed only by a dealer upon the third reassignment of the Certificate of Title. The dealer's business name and business license number must be recorded, and the reassignment must be completed in the same manner as the assignment on the front of the Certificate of Title.

4. Lienholder to be recorded: This section must be completed if the new Certificate of Title is to reflect a security interest in the vehicle. The lienholder's name and address must be recorded. If there is no lienholder, "None" must be recorded in this section.

Note: Any alteration or erasure voids a Nevada Certificate of Title. The reassignment on the front of the title (beginning on item 16 on the front of the title) must be completed before the Dealer Only First Reassignment of Title is completed.

FEDERAL AND STATE LAW REQUIRES THAT YOU STATE THE MILEAGE IN CONNECTION WITH THE TRANSFER OF OWNERSHIP. FAILURE TO COMPLETE OR PROVIDING A FALSE STATEMENT MAY RESULT IN FINES AND/OR IMPRISONMENT.
The undersigned hereby certifies the vehicle described in this title has been transferred to the following buyer(s):

1 FIRST REASSIGNMENT DEALER ONLY

Printed Full Legal Name of Buyer — Nevada Driver's License Number or Identification Number — ☐ AND ☐ OR

Printed Full Legal Name of Buyer — Nevada Driver's License Number or Identification Number

Address — City — State — Zip Code

I certify to the best of my knowledge the odometer reading is the actual mileage of the vehicle unless one of the following statements is checked.

ODOMETER READING [NO TENTHS]
- ☐ The mileage stated is in excess of its mechanical limits.
- ☐ The odometer reading is not the actual mileage. WARNING – ODOMETER DISCREPANCY
- ☐ Exempt – Model year over 9 yrs. old.

Signature of Seller(s)/Agent/Dealership — Printed Name of Seller(s)/Agent/Dealership

I am aware of the above odometer certification made by the seller/agent. ☐ — Dealer's License Number _____ Date of Sale _____

Signature of Buyer — Printed Full Legal Name of Buyer

FEDERAL AND STATE LAW REQUIRES THAT YOU STATE THE MILEAGE IN CONNECTION WITH THE TRANSFER OF OWNERSHIP. FAILURE TO COMPLETE OR PROVIDING A FALSE STATEMENT MAY RESULT IN FINES AND/OR IMPRISONMENT.
The undersigned hereby certifies the vehicle described in this title has been transferred to the following buyer(s):

2 SECOND REASSIGNMENT DEALER ONLY

Printed Full Legal Name of Buyer — Nevada Driver's License Number or Identification Number — ☐ AND ☐ OR

Printed Full Legal Name of Buyer — Nevada Driver's License Number or Identification Number

Address — City — State — Zip Code

I certify to the best of my knowledge the odometer reading is the actual mileage of the vehicle unless one of the following statements is checked.

ODOMETER READING [NO TENTHS]
- ☐ The mileage stated is in excess of its mechanical limits.
- ☐ The odometer reading is not the actual mileage. WARNING – ODOMETER DISCREPANCY
- ☐ Exempt – Model year over 9 yrs. old.

Signature of Seller(s)/Agent/Dealership — Printed Name of Seller(s)/Agent/Dealership

I am aware of the above odometer certification made by the seller/agent. ☐ — Dealer's License Number _____ Date of Sale _____

Signature of Buyer — Printed Full Legal Name of Buyer

FEDERAL AND STATE LAW REQUIRES THAT YOU STATE THE MILEAGE IN CONNECTION WITH THE TRANSFER OF OWNERSHIP. FAILURE TO COMPLETE OR PROVIDING A FALSE STATEMENT MAY RESULT IN FINES AND/OR IMPRISONMENT.
The undersigned hereby certifies the vehicle described in this title has been transferred to the following buyer(s):

3 THIRD REASSIGNMENT DEALER ONLY

Printed Full Legal Name of Buyer — Nevada Driver's License Number or Identification Number — ☐ AND ☐ OR

Printed Full Legal Name of Buyer — Nevada Driver's License Number or Identification Number

Address — City — State — Zip Code

I certify to the best of my knowledge the odometer reading is the actual mileage of the vehicle unless one of the following statements is checked.

ODOMETER READING [NO TENTHS]
- ☐ The mileage stated is in excess of its mechanical limits.
- ☐ The odometer reading is not the actual mileage. WARNING – ODOMETER DISCREPANCY
- ☐ Exempt – Model year over 9 yrs. old.

Signature of Seller(s)/Agent/Dealership — Printed Name of Seller(s)/Agent/Dealership

I am aware of the above odometer certification made by the seller/agent. ☐ — Dealer's License Number _____ Date of Sale _____

Signature of Buyer — Printed Full Legal Name of Buyer

4 LIEN

LIENHOLDER TO BE RECORDED

FEIN _____

Printed Full Legal Name of Lienholder _____ (if no lienholder write "NONE")

Address _____ Street — City — State — Zip Code

ALTERATION OR ERASURE VOIDS THIS TITLE

NEVADA CERTIFICATE OF TITLE
(FORM RD-2)
REVISION 10/01 (FRONT)

1. Vehicle Information: The vehicle identification number, year, make, model and vehicle body.

2. Title Number: The number assigned at the time the title is created. Please note; the four digits following the dash are the technician's identification number who processed the title.

3. Date Issued: The date the title was issued.

4. Odometer Miles: The reading indicated on the vehicle's odometer apparatus.

5. Fuel Type: The type of fuel the vehicle uses.

6. Sales Tax Paid: the "Y" or "N" indicates whether sales tax was paid for the vehicle.

7. Empty Weight: The actual weight of the vehicle when empty.

8. Gross Weight: The maximum recommended weight of the vehicle when full (passengers, luggage, etc.).

9. GVWR: The gross vehicle weight rating (the weight of the vehicle plus the vehicle's useful or maximum-load).

10. Vehicle Color: The color of the vehicle.

11. Odometer Brand: The actual status of the odometer reading.

    A. Actual Mileage; the miles shown on the odometer are the exact miles the vehicle has been driven, required for all vehicles that are nine years and newer and do not meet exemptions in Title 49 Odometer Disclosure.

    B. Exceeds Mechanical Limits; the vehicle has traveled more miles than the odometer is capable of showing.

    C. Warning Odometer Discrepancy; the odometer reading is not the actual mileage (the odometer may have been broken or a new odometer may have been installed).

    D. Exempt; the vehicle is ten years old or older or meets the exemption qualifications in Title 49 Odometer Disclosure.

12. Brands: The description of a vehicle. When more than one brand applies, those brands will be listed:

    - Flood Damage
    - Lemon Law Buyback
    - Non-Rebuildable
    - Non-U.S. Vehicle
    - Not Street Legal
    - Rebuilt
    - Salvage
    - Dis-Salvage
    - Total Loss
    - Reconstructed
    - Specially Constructed

13. Owner(s) Name and Address: The name and address of the person or persons the Certificate of Title is issued to.

14. Lienholder(s) Name and Address: The name and address of the legal owner of the vehicle who holds the security interest, if different from number 13.

15. Lienholder(s) Release: All Nevada Certificates of Title that show a lienholder require a release of lien. The lienholder or authorized agent of the lienholder must complete this section. The signature of the lienholder or the authorized agent and the date of the signature are required to complete the release. If the lienholder is a business, the business name must appear along with the signature of an authorized representative of the business.

16. Full Legal Name and Address of Buyer(s): This section must be completed exactly as it is to appear on the new Certificate of Title; this is the first assignment.

17. Odometer Reading: The odometer reading must be recorded exactly as it shows on the vehicle's odometer apparatus, excluding tenths. The seller(s) must complete the Odometer Statement to the best of their knowledge.

18. Odometer Declaration: If the odometer reading is not the actual mileage of the vehicle, one of the statements must be checked. The Certificate of Title will be branded accordingly.

19. Date of Sale: The actual date ownership of the vehicle was transferred.

20. Signature and Printed Name of the Seller(s).

21. Signature and Printed Full Legal Name of the Buyer(s).

Note: Any alteration or erasure voids a Nevada Certificate of Title. The control number in the lower right hand corner of the Certificate of Title is not the title number. The Department uses this number internally.

STATE OF NEVADA
DEPARTMENT OF MOTOR VEHICLES

CERTIFICATE OF TITLE

VIN 1 | YEAR 1 | MAKE 1 | MODEL 1 | VEHICLE BODY 1 | TITLE NUMBER 2

DATE ISSUED 3 | ODOMETER MILES 4 | FUEL TYPE 5 | SALES TAX PD. 6 | EMPTY WT. 7 | GROSS WT. 8 | GVWR 9

VEHICLE COLOR 10 | ODOMETER BRAND 11 | BRANDS 12

OWNER(S) NAME AND ADDRESS

13

LIENHOLDER(S) NAME AND ADDRESS

14

LIENHOLDER(S) RELEASE - INTEREST IN THE VEHICLE DESCRIBED ON THIS TITLE IS HEREBY RELEASED:

15 SIGNATURE OF AUTHORIZED AGENT — 15 DATE

Printed Name

FEDERAL AND STATE LAW REQUIRES THAT YOU STATE THE MILEAGE IN CONNECTION WITH THE TRANSFER OF OWNERSHIP. FAILURE TO COMPLETE OR PROVIDING A FALSE STATEMENT MAY RESULT IN FINES AND/OR IMPRISONMENT.
The undersigned hereby certifies that the vehicle described in this title has been transferred to the following buyer(s):

Printed Name of Buyer(s) 16 ☐ AND ☐ OR

Printed Name of Buyer(s) 16

Address | City | State | Zip Code

I certify to the best of my knowledge that the odometer reading is the actual mileage of the vehicle unless one of the following statements is checked:

17 ODOMETER READING | NO TENTHS 18 ☐ The mileage stated is in excess of its mechanical limits. Date of Sale 19
☐ The odometer reading is not the actual mileage. WARNING: ODOMETER DISCREPANCY.
☐ Exempt - Model year over 9 years old.

SAMPLE

20 Signature of Seller(s) — 20 Printed Name of Seller(s)

I am aware of the above odometer certification made by the seller/agent. ☐

21 Signature of Buyer(s) — 21 Printed Name of Buyer(s)

ACCORDING TO THE RECORDS OF THE DEPARTMENT OF MOTOR VEHICLES, THE PERSON NAMED HEREON IS THE OWNER OF THE VEHICLE DESCRIBED ABOVE, SUBJECT TO LIEN(S) AS SHOWN.

CONTROL NO. 000010A (THIS IS NOT A TITLE NO.)

RD-2 (Rev. 10/01)

ALTERATION OR ERASURE VOIDS THIS TITLE

NEVADA CERTIFICATE OF TITLE
REVISION 10/01 (BACK)

1. Dealer Only First Reassignment of Title: To be completed only by a dealer upon the first reassignment of the Certificate of Title. The dealer's business name and business license number must be recorded, and the reassignment must be completed in the same manner as the assignment on the front of the Certificate of Title.

2. Dealer Only Second Reassignment of Title: To be completed only by a dealer upon the second reassignment of the Certificate of Title. The dealer's business name and business license number must be recorded, and the reassignment must be completed in the same manner as the assignment on the front of the Certificate of Title.

3. Dealer Only Third Reassignment of Title: To be completed only by a dealer upon the third reassignment of the Certificate of Title. The dealer's business name and business license number must be recorded, and the reassignment must be completed in the same manner as the assignment on the front of the Certificate of Title.

4. Lienholder to be recorded: This section must be completed if the new Certificate of Title is to reflect a security interest in the vehicle. The lienholder's name and address must be recorded. If there is no lienholder, "None" must be recorded in this section.

Note: Any alteration or erasure voids a Nevada Certificate of Title. The reassignment on the front of the title (area 16 on previous page) must be completed before the Dealer Only First Reassignment of Title is completed.

FEDERAL AND STATE LAW REQUIRES THAT YOU STATE THE MILEAGE IN CONNECTION WITH THE TRANSFER OF OWNERSHIP. FAILURE TO COMPLETE OR PROVIDING A FALSE STATEMENT MAY RESULT IN FINES AND/OR IMPRISONMENT.
The undersigned hereby certifies that the vehicle described in this title has been transferred to the following buyer(s):

1 FIRST REASSIGNMENT DEALER ONLY

Printed Name of Buyer(s) ❑ AND ❑ OR

Printed Name of Buyer(s) DEALER NUMBER

Address City State Zip Code

I certify to the best of my knowledge that the odometer reading is the actual mileage of the vehicle unless one of the following statements is checked:

						NO TENTHS

ODOMETER READING

❑ The mileage stated is in excess of its mechanical limits. Date of Sale
❑ The odometer reading is not the actual mileage. WARNING: ODOMETER DISCREPANCY.
❑ Exempt - Model year over 9 years old.

Signature of Seller(s) Printed Name of Seller(s)
I am aware of the above odometer certification made by the seller/agent. ❑

Signature of Buyer(s) Printed Name of Buyer(s)

FEDERAL AND STATE LAW REQUIRES THAT YOU STATE THE MILEAGE IN CONNECTION WITH THE TRANSFER OF OWNERSHIP. FAILURE TO COMPLETE OR PROVIDING A FALSE STATEMENT MAY RESULT IN FINES AND/OR IMPRISONMENT.
The undersigned hereby certifies that the vehicle described in this title has been transferred to the following buyer(s):

2 SECOND REASSIGNMENT DEALER ONLY

Printed Name of Buyer(s) ❑ AND ❑ OR

Printed Name of Buyer(s) DEALER NUMBER

Address City State Zip Code

I certify to the best of my knowledge that the odometer reading is the actual mileage of the vehicle unless one of the following statements is checked:

						NO TENTHS

ODOMETER READING

❑ The mileage stated is in excess of its mechanical limits. Date of Sale
❑ The odometer reading is not the actual mileage. WARNING: ODOMETER DISCREPANCY.
❑ Exempt - Model year over 9 years old.

Signature of Seller(s) Printed Name of Seller(s)
I am aware of the above odometer certification made by the seller/agent. ❑

Signature of Buyer(s) Printed Name of Buyer(s)

FEDERAL AND STATE LAW REQUIRES THAT YOU STATE THE MILEAGE IN CONNECTION WITH THE TRANSFER OF OWNERSHIP. FAILURE TO COMPLETE OR PROVIDING A FALSE STATEMENT MAY RESULT IN FINES AND/OR IMPRISONMENT.
The undersigned hereby certifies that the vehicle described in this title has been transferred to the following buyer(s):

3 THIRD REASSIGNMENT DEALER ONLY

Printed Name of Buyer(s) ❑ AND ❑ OR

Printed Name of Buyer(s) DEALER NUMBER

Address City State Zip Code

I certify to the best of my knowledge that the odometer reading is the actual mileage of the vehicle unless one of the following statements is checked:

						NO TENTHS

ODOMETER READING

❑ The mileage stated is in excess of its mechanical limits. Date of Sale
❑ The odometer reading is not the actual mileage. WARNING: ODOMETER DISCREPANCY.
❑ Exempt - Model year over 9 years old.

Signature of Seller(s) Printed Name of Seller(s)
I am aware of the above odometer certification made by the seller/agent. ❑

Signature of Buyer(s) Printed Name of Buyer(s)

LIEN

LIENHOLDER TO BE RECORDED

Printed Name of Lienholder **4**

Address City State Zip Code

ALTERATION OR ERASURE VOIDS THIS TITLE

NEVADA CERTIFICATE OF TITLE
(FORM RD-2)
REVISION 10/96 (FRONT)

1. Vehicle Information: The vehicle identification number, year, make, model and vehicle body.

2. Odometer/Odometer Remarks: The reading indicated on the vehicle's odometer apparatus. The Certificate of Title will be branded as appropriate to indicate the status of the odometer reading.

   A. Actual Mileage; the miles shown on the odometer are the exact miles the vehicle has been driven, required for all vehicles that are nine years and newer and do not meet exemptions in Title 49 Odometer Disclosure.

   B. Exceeds Mechanical Limits; the vehicle has traveled more miles than the odometer is capable of showing.

   C. Warning Odometer Discrepancy; the odometer reading is not the actual mileage (the odometer may have been broken or a new odometer may have been installed).

   D. Exempt; the vehicle is ten years old or older or meets the exemption qualifications in Title 49 Odometer Disclosure.

3. MSRP: The manufacturer's suggested retail price and the basis for the amount of governmental services tax imposed as part of the total registration fees. It is also used to compute the sales tax when the vehicle is sold between private parties.

Note: Private party (occasional) sales that occurred December 31, 2005, or before, are subject to occasional sales tax. However, if the private party (occasional) sale occurred January 1, 2006, or later, no sales tax is due.

4. Title Number: The number assigned at the time the title is created. Please note; the four digits following the dash are the technician's identification number who processed the title. .

5. Issue Date: The date the Certificate of Title was issued.

6. Type of Title: Identifies the type of title as Original, Duplicate, Non-Repairable or Salvage.

7. Brands: The description of a vehicle. When more than one brand applies, those brands must be listed.

A. Flood Damage
B. Lemon Law Buyback
C. Non-Rebuildable
D. Non-U.S. Vehicle
E. Not Street Legal
F. Rebuilt
G. Salvage
H. Dis-Salvage
I. Total Loss
J. Reconstructed
K. Specially Constructed

8. Mailing Address: Indicates to whom and where the Certificate of Title is mailed.

9. Owner's Name and Address: Indicates to whom the Certificate of Title is issued.

10. Lienholder: Indicates the legal owner of the vehicle if different from number 9.

11. Release of Lien: All Nevada Certificates of Title that show a lienholder require a release of lien, before a new title can be issued or before the vehicle can be sold. The lienholder or his authorized agent must complete this section. The signature of the lienholder or the authorized agent and the date of the signature are required to complete the release. If the lienholder is a business, the business name must appear along with the signature of an authorized representative of the business. If the lien is not released on the title, a lien release form VP-186 may be used.

Note: The control number in the lower right hand corner of the Certificate of Title is not the title number. The Department uses this number internally.

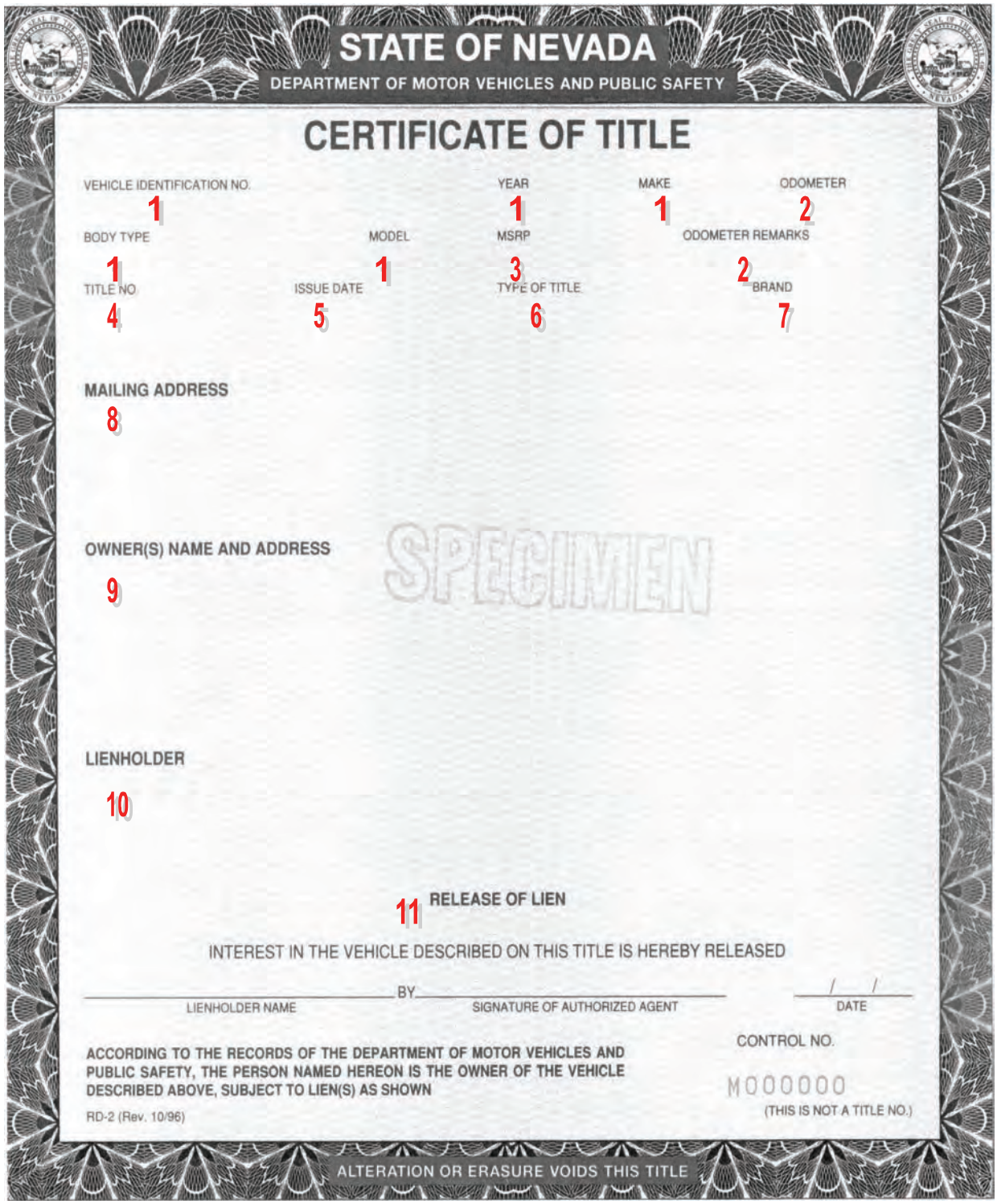

STATE OF NEVADA

DEPARTMENT OF MOTOR VEHICLES AND PUBLIC SAFETY

CERTIFICATE OF TITLE

VEHICLE IDENTIFICATION NO. 1

YEAR 1

MAKE 1

ODOMETER 2

BODY TYPE 1

MODEL 1

MSRP 3

ODOMETER REMARKS 2

TITLE NO. 4

ISSUE DATE 5

TYPE OF TITLE 6

BRAND 7

MAILING ADDRESS 8

OWNER(S) NAME AND ADDRESS 9

SPECIMEN

LIENHOLDER 10

11 RELEASE OF LIEN

INTEREST IN THE VEHICLE DESCRIBED ON THIS TITLE IS HEREBY RELEASED

LIENHOLDER NAME _____ BY _____ SIGNATURE OF AUTHORIZED AGENT _____ DATE ___/___/___

ACCORDING TO THE RECORDS OF THE DEPARTMENT OF MOTOR VEHICLES AND PUBLIC SAFETY, THE PERSON NAMED HEREON IS THE OWNER OF THE VEHICLE DESCRIBED ABOVE, SUBJECT TO LIEN(S) AS SHOWN

CONTROL NO.

M000000

(THIS IS NOT A TITLE NO.)

RD-2 (Rev. 10/96)

ALTERATION OR ERASURE VOIDS THIS TITLE

NEVADA CERTIFICATE OF TITLE
REVISION 10/96 (BACK)

Assignment of Title:

1. Full Legal Name and Address of Buyer: This information must show exactly as it is to appear on the new Certificate of Title.

2. Odometer Declaration: The odometer reading must be recorded exactly as it appears on the vehicle's odometer apparatus, excluding tenths. The seller must complete the odometer statement to the best of his or her knowledge.

3. Odometer Reading: If the odometer reading is not the actual mileage, one of the statements must be checked. The Certificate of Title will be branded accordingly.

4. Date of Sale: The actual date the ownership of the vehicle was transferred.

5. The Signature and Printed Name of Seller.

6. The Signature and Printed Full Legal Name of Buyer.

7. Dealer Reassignment (First and Second): These assignments are for dealers only, and they must be completed in the same manner as the assignment of title. The dealer's business name and business license number must be recorded.

8. Lienholder: This section must be completed if the new Certificate of Title is to reflect a security interest in the vehicle. The lienholder's name and address must be recorded. If there is no lienholder, "None" must be recorded in this section.

Note: Any alteration or erasure voids the Certificate of Title.

FEDERAL AND STATE LAW REQUIRES THAT YOU STATE THE MILEAGE IN CONNECTION WITH THE TRANSFER OF OWNERSHIP. FAILURE TO COMPLETE OR PROVIDING A FALSE STATEMENT MAY RESULT IN FINES AND/OR IMPRISONMENT.

ASSIGNMENT OF TITLE

The Undersigned Hereby Certifies That the Vehicle Described In This Title Has Been Transferred to the Following Buyer(s):

☐ AND
☐ OR

Printed Name of Buyer(s) 1

Printed Name of Buyer(s) 1

Address City State Zip Code

I certify to the best of my knowledge that the odometer reading is the actual mileage of the vehicle unless one of the following statements is checked:

2 ODOMETER READING NO TENTHS

3
☐ The mileage stated is in excess of its mechanical limits.
☐ The odometer reading is not the actual mileage.
WARNING - ODOMETER DISCREPANCY
☐ Exempt - Model year over 9 yrs old.

Date of Sale 4

5 Signature of Seller(s) 5 Printed Name of Seller(s)

I am aware of the above odometer certification made by the seller/agent. ☐

6 Signature of Buyer(s) 6 Printed Name of Buyer(s)

FIRST REASSIGNMENT DEALER ONLY

7 The Undersigned Hereby Certifies That the Vehicle Described In This Title Has Been Transferred to the Following Buyer(s):

Printed Name of Buyer(s) Street City State Zip Code

I certify to the best of my knowledge that the odometer reading is the actual mileage of the vehicle unless one of the following statements is checked:

ODOMETER READING NO TENTHS

☐ The mileage stated is in excess of its mechanical limits.
☐ The odometer reading is not the actual mileage.
WARNING - ODOMETER DISCREPANCY
☐ Exempt - Model year over 9 yrs old.

Dealer No. Dealer's Name Date of Sale

Signature of Agent Printed Name of Agent

I am aware of the above odometer certification made by the seller/agent. ☐

Signature of Buyer/Agent Printed Name of Buyer/Agent

SECOND REASSIGNMENT DEALER ONLY

7 The Undersigned Hereby Certifies That the Vehicle Described In This Title Has Been Transferred to the Following Buyer(s):

Printed Name of Buyer(s) Street City State Zip Code

I certify to the best of my knowledge that the odometer reading is the actual mileage of the vehicle unless one of the following statements is checked:

ODOMETER READING NO TENTHS

☐ The mileage stated is in excess of its mechanical limits.
☐ The odometer reading is not the actual mileage.
WARNING - ODOMETER DISCREPANCY
☐ Exempt - Model year over 9 yrs old.

Dealer No. Dealer's Name Date of Sale

Signature of Agent Printed Name of Agent

I am aware of the above odometer certification made by the seller/agent. ☐

Signature of Buyer/Agent Printed Name of Buyer/Agent

LIEN

LIENHOLDER TO BE RECORDED AND SHOWN ON NEW TITLE: 8

Printed Name of LienHolder

Address City State Zip Code

NOTE: PURCHASER MUST APPLY FOR NEW TITLE WITHIN 10 DAYS AFTER PURCHASE
ALTERATION OR ERASURE VOIDS THIS TITLE

APPLICATION FOR DUPLICATE NEVADA CERTIFICATE OF TITLE
(FORM VP-12)

If a Nevada Certificate of Title has been lost, stolen or mutilated, a duplicate Nevada Certificate of Title may be obtained by completing the Application for Duplicate Nevada Certificate of Title.

The *Application for Duplicate Certificate of Title* (Form VP-12) must be completed in full and submitted by the owner of record on file with the Department. The application must be signed and witnessed by a notary public or an authorized Nevada Department of Motor Vehicles representative.

The "Registered Owner(s)" and "Lienholder" areas must be completed exactly as shown on the current title record. If the original Certificate of Title was issued with "and" between the registered owner's names, all owners must sign the application. If the original Certificate of Title was issued without an indicator such as "and" or "or" then all owners must sign the application. The Department considers the lack of a name indicator as "and" in these cases.

If a lienholder is applying for the duplicate Certificate of Title, the lienholder must complete the application.

The "Requested By" area must be completed if the duplicate Certificate of Title is to be mailed to a different address or person. A letter of authorization is also needed unless the requestor is a licensed Nevada Dealer.

An odometer certification is not required for a duplicate Certificate of Title; however, a new odometer reading should be recorded whenever possible on vehicles that are 9 years old or newer, subject to the Federal Truth-In-Mileage Act.

If the lien on the vehicle has been satisfied, a notarized lien release signed by the lienholder is required.

If an original Nevada Certificate of Title was never received, a *Lost Title Affidavit* (Form VP-206) must also be completed in full, notarized or witnessed by an authorized Nevada DMV representative, and submitted with the Application for a Duplicate Nevada Certificate of Title.

LOST TITLE AFFIDAVIT
(FORM VP-206)

A Lost Title Affidavit must be completed and accompany the Application for Duplicate Nevada Certificate of Title If an original Nevada Certificate of Title was never received.

The Lost Title Affidavit (Form VP-206) must be completed in full and submitted by the owner of record on file with the Department. The affidavit must be signed and witnessed by a notary public or an authorized Nevada Department of Motor Vehicles representative.

ODOMETER MILEAGE DISCLOSURE
NRS 482.245, NRS 484D.300 to 484D.345

Federal and state laws and regulations require an odometer disclosure be completed upon transfer of ownership for vehicles 9 years old or newer.

The odometer disclosure must be made in writing on the secure title document or on the secure reassignment document if one is used to reassign a title.

If the vehicle has never been titled, i.e., a new vehicle or one coming into the country for the first time, the disclosure should be made on a separate document. This document does not need to be secure, however, the same person (person includes company or corporation) cannot sign the disclosure as both the transferee and transferor.

The seller and purchaser must jointly attest to the odometer reading shown on the vehicle's odometer apparatus at the time of transfer of ownership of the vehicle.

If the odometer reading is not the actual mileage of the vehicle, the appropriate designation must be made on the odometer disclosure.

If a vehicle does not have an odometer, the disclosure must include a statement to that effect, and the true mileage of the vehicle is not known.

An odometer disclosure must be completed when an out-of-state vehicle is titled for the first time in Nevada, even if there is no ownership change.

An odometer disclosure must include:

- The printed name and signature of each buyer and seller (the buyer and seller cannot be the same person)
- The current address of each buyer and seller
- A complete vehicle description (make, model, year, body type and VIN)
- The current odometer reading, excluding tenths
- The date of the transfer of ownership

A Secure Power of Attorney must be used to disclose the mileage of the vehicle when a Certificate of Title or ownership is physically held by a lienholder or when a duplicate Certificate of Title or ownership is applied for. **Refer to the Secure Power of Attorney section for additional information.**

The original copy of the odometer disclosure statement must be submitted to the Department with the title documents.

LEASED VEHICLES

Before a transfer of ownership is documented, each lessor of a leased motor vehicle shall notify the lessee in writing the lessee is required to provide a written odometer disclosure to the lessor regarding the mileage. The disclosure may be made on either the Certificate of Title, or if the reassignment area is filled, using the Dealer Reassignment of Title form. This disclosure must contain a reference to the federal law and must state that failure to complete or providing false information may result in fines and/or imprisonment. Reference may also be made to applicable state law.

The disclosure must be signed by both the lessee and lessor.

REPOSSESSED VEHICLES

The odometer reading for vehicles that have been repossessed must be reported by the legal owner of the vehicle (lienholder).

UNRECOVERED STOLEN VEHICLES

Vehicles that are transferred to an insurance company when a payoff is made on an un-recovered stolen vehicle are exempt from the odometer disclosure requirements due to the unavailability of the vehicle.

MILES VERSUS KILOMETERS

To accurately reflect the true reading of the odometer apparatus, the documents (title, reassignment, etc.) should indicate whether the odometer records the distance traveled in miles or kilometers.

When the title is processed, the kilometers will be converted to miles. The kilometers are multiplied by 0.6214 then round to the nearest whole number, the answer is used as the miles.

SECURE POWER OF ATTORNEY

A *Secure Power of Attorney* (VP-221) is used when a Certificate of Title is physically held by a lienholder, or when a Certificate of Title has been lost. The owner of a vehicle may give power of attorney to a buyer for the purpose of mileage disclosure. The authorization to do so must be conveyed by a secure power of attorney.

The Secure Power of Attorney form may be purchased from any Field Services Office of the Department of Motor Vehicles. This is a $.50 fee for each form.

Erasures, corrections or the use of correction fluid to correct any information other than an address void the form. If a correction to an address is made, an Erasure Affidavit (Form VP-19) must be completed and attached to the Secure Power of Attorney. The Erasure Affidavit cannot be used for errors made to the Odometer statement.

The buyer and the seller must retain a copy of the statement.

INSTRUCTIONS FOR COMPLETING THE NEVADA SECURE POWER OF ATTORNEY FORM

1. Vehicle Description: Enter the vehicle identification number, year, make, model, and body type.

Part A: Power of Attorney to Disclose Mileage

2. Sellers: Enter the printed name of the sellers.

3. Buyers: Enter the printed full legal name of the buyers.

4. Date: Enter the date Part A was completed.

5. Odometer Reading: Enter the exact reading of the vehicle's odometer apparatus, excluding tenths.

6. Check the appropriate box if the odometer reading is not the actual mileage of the vehicle.

7. Enter the signature and printed name of the transferor/seller.

8. Enter the address of the transferor/seller.

9. Enter the signature and printed full legal name of the transferee/buyer.

10. Enter the dealer's business name, if applicable.

11. Enter the business license number of the dealer, if applicable.

12. Enter the address of the transferee/buyer.

Part B: Power of Attorney to Review Title Document and Acknowledge Disclosure

Note: Part B is invalid unless Part A has been completed.

13. Enter the printed full legal name of the transferee/buyer.

14. Enter the printed name of the transferor/seller.

15. Enter the signature and printed full legal name of the transferee.

16. Enter the complete address of the transferee.

17. Enter the date Part B was completed.

18. Enter the seller's printed name.

19. Enter the exact reading of the vehicle's odometer apparatus, excluding tenths.

20. Check the appropriate box if the odometer reading is not the actual mileage of the vehicle.

21. Enter the signature and printed name of the transferor.

22. Enter the dealer's business name.

23. Enter the business license number of the dealer.

24. Enter the complete address of the transferor.

Part C: Certification

Note: Part C is to be completed only if Parts A and B have been completed.

25. Enter the full legal name of the person exercising the power of attorney.

26. Enter the signature and printed name of the person exercising the power of attorney.

27. Enter the date Part C was completed.

28. Enter the complete address of the person exercising the power of attorney.

FILING AND RETENTION OF COPIES

The original copy of the Secure Power of Attorney must be attached to the Certificate of Title when received, and is to remain with the title until the seller making application for title for the buyer files it.

The seller must retain the first copy of the Secure Power of Attorney for at least five years.

The second copy of the Secure Power of Attorney must be given to the seller who completed the power of attorney in PART A.

Direct Business Systems - 775.825.8445
U.S. Patents 4,227,720 ; 4,310,180

A - 227002

NEVADA

SECURE POWER OF ATTORNEY

WARNING: This form may be used only when title is physically held by lienholder or has been lost. This form must be submitted to the State by the person exercising Powers of Attorney. Failure to do so may result in fines and/or imprisonment.

VEHICLE DESCRIPTION

Vehicle Identification Number (VIN)	Year	Make	Model	Body Type
1	1	1	1	1

PART A. POWER OF ATTORNEY TO DISCLOSE MILEAGE

Federal and State law requires that you state the mileage upon transfer of ownership. Providing a false statement may result in fines and/or imprisonment.

I, 2 _____ (Transferor's/Seller's Name, Print) appoint 3 _____ (Transferee's/Buyer's Name, Print) as my attorney-in-fact, to sign all papers and documents required to secure the title and further grant the authority to endorse and transfer title thereto, and to disclose the mileage, for the vehicle described above, exactly as stated in my following disclosure.

Date of Statement 4 _____

I state that the odometer now reads 5 _____ (NO TENTHS) miles and to the best of my knowledge that it reflects the actual mileage unless one of the following statements is checked:

☐ 1. I hereby certify that to the best of my knowledge the odometer reading reflects the mileage in excess of its mechanical limits.

6 ☐ 2. I hereby certify that the odometer reading is NOT the actual mileage. ***WARNING - ODOMETER DISCREPANCY***

7 _____ (Transferor's Signature) _____ (Printed Name) 7 _____ (Co-Transferor's Signature) _____ (Printed Name)

Transferor's Address 8 _____ (Street) _____ (City) _____ (State) _____ (Zip Code)

9 _____ (Transferee's Signature) _____ (Printed Name) 10 _____ (Dealership Name) 11 _____ (Dealer License Number)

Transferee's Address 12 _____ (Street) _____ (City) _____ (State) _____ (Zip Code)

PART B. POWER OF ATTORNEY TO REVIEW TITLE DOCUMENT AND ACKNOWLEDGE DISCLOSURE

(Part B is invalid unless Part A has been completed)

I, 13 _____ (Transferee's/Buyer's Name, Print) appoint 14 _____ (Transferor's/Seller's Name, Print) as my attorney-in-fact, to sign the mileage disclosure, on the title for the vehicle described above, only if the disclosure is exactly as the disclosure completed below. The attorney-in-fact may endorse, release, or transfer ownership documents as required by Nevada Revised Statutes for the vehicle described above.

15 _____ (Transferee's Signature) _____ (Printed Name) _____ (Transferee's Address Street, City, State, Zip)

Federal and State law require that you state the mileage upon transfer of ownership. Providing a false statement may result in fines and/or imprisonment.

Date of Statement 17 _____

I, 18 _____ (Transferor's name, PRINT) state that the odometer now reads 19 _____ (NO TENTHS) miles and to the best of my knowledge that it reflects the actual mileage unless one of the following statements is checked:

☐ 1. I hereby certify that to the best of my knowledge the odometer reading reflects the mileage in excess of its mechanical limits.

20 ☐ 2. I hereby certify that the odometer reading is NOT the actual mileage. ***WARNING - ODOMETER DISCREPANCY***

21 _____ (Transferor's Signature) _____ (Printed Name) 22 _____ (Dealership Name) 23 _____ (Dealer License Number)

Transferor's Address 24 _____ (Street) _____ (City) _____ (State) _____ (Zip Code)

PART C. CERTIFICATION (To be completed if parts A and B have been completed)

I, 25 _____ (person exercising above powers of attorney, PRINT), hereby certify that the mileage I have disclosed on the title document is consistent with that provided to me in the above power of attorney. Upon examination of the title and any reassignment documents for the vehicle described above, the mileage disclosure I have made on the title pursuant to the power of attorney is greater than that previously stated on the title and reassignment documents. This certification is not intended to create, nor does it create any new or additional liability under Federal or State law.

Signature 26 _____ Printed Name 26 _____ Date 27 _____

28 _____ (Street) _____ (City) _____ (State) _____ (Zip Code)

WARNING-DO NOT ACCEPT THIS POWER OF ATTORNEY DOCUMENT WITHOUT NOTING SECURITY WATERMARK: HOLD TO LIGHT TO VERIFY WATERMARK DS300

See reverse side for special instructions

SALVAGE TITLES
(FORM VP2S)

Salvage Title (NAC 487.007) means a title of ownership issued by the Department to an automobile wrecker authorizing the disposal of the vehicle identified on the salvage title.

The Department will issue a Salvage Title for a vehicle upon application by the:

- Owner of the vehicle
- Person to whom the vehicle is titled
- Insurance company that acquires the vehicle as a salvage vehicle
- Lienholder who acquires title to the vehicle

If the Certificate of Title/Ownership is held by a lienholder, the registered owner must notify the lienholder within 10 days the vehicle has become a salvage vehicle. The lienholder must, within 30 days of receiving the notice, forward the title and the *Application for Salvage Title or Non-Repairable Vehicle Certificate* (Form VP-213) to the Department.

An Application for Salvage Title or Non-Repairable Vehicle Certificate and all accompanying documents will be returned to the applicant if they are not completed in full.

Salvage Title Fees:

• Licensed Nevada Automobile Wrecker	No fee
• Out-of-State Automobile Wrecker	$10.00
• Licensed Nevada Salvage Pool	$10.00
• In-State or Out-of-State Insurance Companies	$10.00
• Out-of-State Vehicle Dealers (must be registered with a Salvage Pool)	$10.00

An owner of a salvage vehicle may only sell the salvage vehicle to a salvage pool, automobile auction, rebuilder, automobile wrecker, or a new or used automobile dealer.

The Authorization for Vehicle Restoration must be obtained prior to the vehicle being rebuilt for vehicles five years old or newer. The vehicle must be repaired or restored to operation, complete a VP-64 for automobiles or a VP-64M for motorcycles and have a branded title before the vehicle may be sold to a person other than the businesses listed.

NEVADA CERTIFICATE OF SALVAGE TITLE, Form VP-2S (Rev. 8/10)

STATE OF NEVADA
DEPARTMENT OF MOTOR VEHICLES

SALVAGE TITLE

VIN | YEAR | MAKE | MODEL | VEHICLE BODY | TITLE NUMBER

DATE ISSUED | ODOMETER MILES | FUEL TYPE | SALES TAX PD | EMPTY WT | GROSS WT | GVWR

VEHICLE COLOR | ODOMETER BRAND | BRANDS

OWNER(S) NAME AND ADDRESS

SAMPLE

LIENHOLDER NAME AND ADDRESS

LIENHOLDER RELEASE - INTEREST IN THE VEHICLE DESCRIBED ON THIS TITLE IS HEREBY RELEASED:

SIGNATURE OF AUTHORIZED AGENT | DATE

PRINTED NAME OF AGENT AND COMPANY

FEDERAL AND STATE LAW REQUIRES THAT YOU STATE THE MILEAGE IN CONNECTION WITH THE TRANSFER OF OWNERSHIP. FAILURE TO COMPLETE OR PROVIDING A FALSE STATEMENT MAY RESULT IN FINES AND/OR IMPRISONMENT.
The undersigned hereby certifies the vehicle described in this title has been transferred to the following buyer(s):

Printed Full Legal Name of Buyer | **Nevada Driver's License Number or Identification Number** | ☐ AND ☐ OR

Printed Full Legal Name of Buyer | **Nevada Driver's License Number or Identification Number**

Address | **City** | **State** | **Zip Code**

I certify to the best of my knowledge the odometer reading is the actual mileage of the vehicle unless one of the following statements is checked.

ODOMETER READING | NO TENTHS

☐ **The mileage stated is in excess of its mechanical limits.**
☐ **The odometer reading is not the actual mileage. WARNING: ODOMETER DISCREPANCY.**
☐ **Exempt - Model year over 9 years old.**

Signature of Seller(s)/Agent/Dealership | Printed Name of Seller(s)/Agent/Dealership

I am aware of the above odometer certification made by the seller/agent. ☐ Dealer's License Number _____ **Date of Sale** _____

Signature of Buyer | **Printed Full Legal Name of Buyer**

ACCORDING TO THE RECORDS OF THE DEPARTMENT OF MOTOR VEHICLES, THE PERSON NAMED HEREON IS THE OWNER OF THE VEHICLE DESCRIBED ABOVE, SUBJECT TO LIEN AS SHOWN.

CONTROL NO.
S000000
(THIS IS NOT A TITLE NO.)

VP-2S (Rev. 8/10)

STATE OF NEVADA

ALTERATION OR ERASURE VOIDS THIS TITLE

OUT-OF-STATE SALVAGE CERTIFICATES/TITLES

Salvage certificates issued by other states must be properly endorsed and must indicate and document a complete “chain of ownership” for the vehicle.

Contact the Department prior to accepting documents for a salvaged or junked vehicle, as laws from other states vary, and there may be instances where the Department must determine whether the documents can be accepted and whether a Salvage Title can be issued.

RETENTION OF SALVAGE VEHICLES

An insured party (registered owner) may elect to retain a vehicle that has been declared a total loss insurance settlement. The insurance company or authorized agent must obtain the signature of the registered owner on the Application for Salvage Title or Non-Repairable Vehicle Certificate.

The insurance company must apply for a Salvage Title on behalf of the person who is retaining the salvage vehicle. The vehicle may not be sold or transferred until the registered owner has received a Salvage Title.

AUTHORIZATION FOR VEHICLE RESTORATION
(FORM VP-209)
NRS 487.480

As required by NRS 487.480, the Department will not issue a Certificate of Registration or title for vehicles that have been issued a Salvage Title (if the vehicle is five years old or newer) unless the Department has authorized the restoration of the vehicle. Form VP-209, *Authorization for Vehicle Restoration*, must be completed.

The authorization to restore the vehicle must be obtained prior to the vehicle being rebuilt. Only an authorized Nevada Department of Motor Vehicles Representative may complete the form.

In order to register and/or title the vehicle, the Authorization for Vehicle Restoration, Salvage Title and Certificate of Inspection/Affidavit of Vehicle Construction for Rebuilt or Specially Constructed Vehicles (VP-64 or VP-64M) must be provided. Additional documents may be required as deemed necessary.

DMV
Nevada Department of Motor Vehicles

555 WRIGHT WAY
CARSON CITY, NV 89711
Reno/Sparks/Carson City (775) 684-4DMV (4368)
Las Vegas Area (702) 486-4DMV (4368)
Rural Nevada or Out of State (877) 368-7828
www.dmvnv.com

AUTHORIZATION FOR VEHICLE RESTORATION

PURSANT TO NRS 487.480

Vehicle Identification Number:

1 ☐ ☐ ☐ ☐ ☐ ☐ ☐ ☐ ☐ ☐ ☐ ☐ ☐ ☐ ☐ ☐ ☐ ☐

Year 1 Make 1 Model 1 Type 1 Odometer 1

In Possession of:

Name 2
First Middle Last

Address 2
City State Zip Code

I, the undersign, have inspected the above described vehicle and authorize its restoration.

Printed name 3
Authorized Nevada DMV Representative

Signature 3 Date

RD 209 (04/03)

CERTIFICATE OF INSPECTION / AFFIDAVIT OF VEHICLE CONSTRUCTION FORM VP-64
CERTIFICATE OF INSPECTION / AFFIDAVIT OF MOTORCYCLE / TRIMOBILE CONSTRUCTION FORM VP-64M
CERTIFICATE OF INSPECTION AND AFFIDAVIT OF TRAILER CONSTRUCTION FORM VP-223
NRS 487.860

Certificate of Inspection Affidavit of Vehicle Construction (Form VP-64)*, Certificate of Inspection / Affidavit of Motorcycle / Trimobile Construction* (Form VP-64M) or *Certificate of Inspection Affidavit of Trailer Construction* (Form VP-223) must be completed in order to register or title a vehicle for which a Salvage Title has been issued. The Certificate of Title and other documentation, as required, must also accompany the VP-64, VP-64M or VP-223.

An owner or authorized employee of a Nevada registered garageman or licensed body shop or rebuilder must certify that a salvage vehicle is repaired or rebuilt and must comply with the standards published and commonly applied in the motor vehicle repair industry.

Motorcycle repair shops must be registered with the Department.

If any safety equipment that was present in a motor vehicle at the time it was manufactured is repaired or replaced, the equipment must be repaired or replaced to the standards published and commonly applied in the motor vehicle repair industry.

If a motor vehicle has been in an accident and a garageman or operator of a body shop accepts or rebuilder assumes control of the motor vehicle to make any repair, the garageman or operator shall:

(a) For a motor vehicle that is equipped with an airbag that has been deployed, replace the airbag in a manner that complies with the standards set forth in 49 C.F.R. § 571.208, Standard No. 208, for such equipment; and

(b) For a motor vehicle that is equipped with a seatbelt assembly which requires repair or replacement, repair or replace the seatbelt assembly in a manner that complies with the standards set forth in 49 C.F.R. § 571.209, Standard No. 209, for such equipment.

A garageman or rebuilder or operator of a body shop who is licensed pursuant to the provisions of chapter 487 of NRS and who performs the work required must retain a written record of the work, including, without limitation, the date of the repair, rebuilding or replacement, and any identifying information regarding any parts or equipment used in the repair, rebuilding or replacement.

Nevada Highway Patrol Troopers, local police and sheriffs are considered authorized agents of the Department and may complete a VIN inspection (VP-15). However an Authorized DMV Agency Inspector must complete form VP-64 or VP-64M. An "Authorized Nevada DMV Representative" must complete the VP-223 and VP-209. The agency name and badge number must be recorded on the form.

Nevada Certificates of Title issued for vehicles using form VP-64, VP64-M or VP-223 will be branded in accordance with statements made on the form by the owner.

Form VP-64, VP-64M or VP-223 may also be used for required mechanic's inspections and required Department safety checks.

The VP-64 and VP-64M may not be used to convert a vehicle labeled for "off-road use only" for on-road use. No vehicle may be converted with the exception of an off highway two-wheeled motorcycle using Form VP-254.

INSTRUCTION FOR COMPLETING FORM VP-64

1. Indicate whether the vehicle is rebuilt salvage, reconstructed, specially constructed or a manufactured kit.

PART I – SAFETY INSPECTION - To be completed by a garageman, or authorized employee of a licensed Nevada Body Shop or rebuilder.

2. Vehicle description must be completed in full, including the vehicle identification number.
3. If items being inspected are acceptable, the applicable box must be checked after each item is inspected. Unless the item is not applicable (N/A), if an item being inspected is marked as “fail” the vehicle cannot be register until repairs are made.
4. The printed name and address and DMV business license number of the business completing the form.
5. Full legal name of the person completing the form.
6. Signature and position of the person completing the form.
7. The date the inspection was completed.

PART II – AFFIDAVIT OF CONSTRUCTION FOR REBUILT SALVAGE, RECONSTRUCTED AND SPECIALLY CONSTRUCTED VEHICLES
To be completed by the person who owns the vehicle.

8. Check appropriate box for how the vehicle was constructed.
9. Vehicle information; Year, Make, Model, Type, and number of Axles.
10. Affiant’s printed full legal name as it appears on their Nevada Driver’s license or Identification card.
11. Affiant’s Driver’s license or Identification card number.
12. Affiant’s telephone number.
13. Affiant’s address.
14. Affiant’s signature.
15. Signature must be witness by Authorized Nevada DMV Representative.
16. The date Part II was completed.

PART III
To be completed by an Authorized Nevada DMV Representative.

17. VIN and part description must be completed for all components used.
18. Verify VIN from Part I.
19. Check box for VIN inspection fee.
20. Fill in if VIN was assigned or VIN from manufacturer’s kit.
21. Check box if VIN was assigned.
22. List the vehicle information if it is different than listed in Part I.
23. Reason VIN assigned, if applicable.
24. Complete the odometer statement.
25. If the vehicle was restored prior to authorization, this box can be checked authorizing restoration after the fact.
26. Additional comments, if applicable.

27. Printed Name and Signature of Authorized Nevada DMV Representative - Include Employee Identification Number.
28. Date Part III was completed.

555 WRIGHT WAY
CARSON CITY, NV 89711-0700
Reno/Sparks/Carson City (775) 684-4DMV (4368)
Las Vegas Area (702) 486-4DMV (4368)
Rural Nevada or Out of State (877) 368-7828
www.dmvnv.com

CERTIFICATE OF INSPECTION / AFFIDAVIT OF VEHICLE CONSTRUCTION NRS 482.223

(1) ☐ **Rebuilt Salvage** ☐ **Reconstructed** ☐ **Specially Constructed** ☐ **Manufactured Kit**

A VEHICLE LABELED FOR "OFF-ROAD USE ONLY" MAY NOT BE CONVERTED FOR ON-ROAD USE WITH THE EXCEPTION OF AN OFF HIGHWAY TWO-WHEELED MOTORCYCLE (REFERENCE FORM VP-254).

Instructions

- All parts of this form must be completed.
- A Nevada Registered Garage, Licensed Nevada Body Shop or Rebuilder must complete Part I.
- The vehicle owner must complete Part II and verify with a Nevada DMV Agency Representative or Notary Public.
- A Nevada DMV Agency Representative must complete Part III.
- A vehicle intended for "on-road" use by the manufacturer will be labeled stating FMVSS and EPA standards have been met.
- All inspection items must be checked "PASS," indicating the item is in a safe operating condition before this vehicle can be registered and/or titled.
- This form is not used for conversions. Reference Form VP-254 for an Off-Highway Two Wheeled Motorcycle Conversion Form.
- **OWNERSHIP DOCUMENTS MUST ACCOMPANY THIS FORM**

Important: A new form and inspection must be completed if any inspection items are marked fail, not marked, improperly marked, or if corrections were made to the form.

PART I SAFETY INSPECTION

Must be completed by a Nevada Registered Garage, Licensed Nevada Body Shop or Rebuilder

The work performed on the vehicle must meet the standards of the manufacturer for mechanical fitness and safety

(2) Year_____Make_____Model_____Type_____

(2) Vehicle Identification Number (VIN)

Important: Adding the equipment listed below will not qualify a vehicle labeled by the manufacturer for OFF-ROAD USE ONLY, to be registered for on-road use

(3) Check (√) Appropriate Boxes

	PASS	FAIL	N/A		PASS	FAIL		PASS	FAIL	N/A
Windshield	☐	☐	☐	Headlights	☐	☐	Horn	☐	☐	
Side Glass	☐	☐	☐	Taillights	☐	☐	Muffler	☐	☐	
Rear Glass	☐	☐	☐	Turn Signals	☐	☐	Mudguards (over 26,000 lbs)	☐	☐	☐
Mirrors	☐	☐		Parking Lights	☐	☐	Windshield Wipers	☐	☐	
Steering	☐	☐		Brake Lights	☐	☐	Emergency Brake	☐	☐	
Air Bags	☐	☐	☐	Brakes	☐	☐	Seat Belts, Shoulder Harness	☐	☐	☐
Frame	☐	☐								

Other (explain) _____ ☐ ☐

Before signing below all items above must be marked "pass" indicating the items are in a safe operating condition. N/A may apply to air bags, mudguards, reflectors and safety belts/shoulder harness only if the item was not original equipment. N/A may apply to glass and windshield if not present; if present it must be proper safety glass.

Please Print or Type

(4) Legal Business Name _____

Name DMV Business License or Registration Number

(4) Address_____

City State Zip Code

By signing this document, I certify the described motor vehicle is mechanically safe to operate and is equipped with all required devices necessary for safe operation upon the highway. I further certify that if repaired, the passenger restraint devices (as applicable), to include seat belts and/or airbags, were repaired pursuant to Title 49 CFR 571.209, Standard 209, and Title 49 CFR 571.208, Standard 208, respectively, and have been satisfactorily repaired to the applicable standards of the manufacturer and the motor vehicle repair industry.

(5)_____ **(6)**_____ **(7)**_____

Printed Full Legal Name of Affiant Signature and Position Date

PART II AFFIDAVIT OF CONSTRUCTION FOR REBUILT SALVAGE, RECONSTRUCTED AND SPECIALLY CONSTRUCTED VEHICLES

The undersigned, being duly sworn upon oath, deposes and says they are the owner of the vehicle listed below. This vehicle was rebuilt or built from parts and materials on hand, or parts and materials purchased from a supplier, or a manufactured kit purchased from a supplier, or purchased "as is" from a rebuilder, or otherwise lawfully acquired. The affiant or registered owner makes this affidavit as part of an application to the Nevada Department of Motor Vehicles for a Certificate of Registration and/or a Certificate of Title. The undersigned will indemnify and hold harmless the State of Nevada on account of the issuance of a Certificate of Registration and/or Certificate of Title for said vehicle.

(8) ☐ Vehicle was constructed from parts/material on hand ☐ Vehicle was assembled from manufactured kit
☐ Vehicle was built from purchased parts/material, receipts attac ☐ Vehicle was purchased "as is" from rebuilder

Please Print or Type

(9)_____ _____ _____ _____ _____
Year Make (if a manufactured kit) Model Type No. of axles

Affiant's Full Legal Name **(10)**_____
(As appears on Drivers License or ID) First Middle Last

Drivers License or ID Number **(11)**_____ Telephone Number **(12)** _____

Affiant's Address **(13)** _____
City State Zip Code

Affiant's Signature **(14)** _____ Date_____

(15) _____ _____ _____ **(16)** _____
Printed name of Nevada DMV Agency Representative Or Notary Public | Signature of Nevada DMV Agency Representative Or Notary Public | ID No. | Date

PART III COMPLETED BY AN AUTHORIZED NEVADA DMV REPRESENTATIVE

Note: Attach copies of any title or purchase documents, supplied by owner, showing information of components used from other vehicles.

(17) VIN & Part _____ VIN & Part_____

(17) VIN & Part _____ VIN & Part_____

(18) VIN indicated in Part I Verified

(19) Vehicle Inspection Fee ☐

(20) DMV Assigned VIN or Kit Manufacturer's VIN

(21) VIN Assignment Fee ☐

(22) ☐ Different than listed in Part I Year_____ Make_____ Model_____ Type_____

(23) Reason VIN assigned _____

Odometer Reading (as shown on apparatus)

NO TENTHS

(24) If the vehicle's odometer apparatus only displays five numbers, please put an X in the first box.
☐ 1. The mileage stated is in excess of its mechanical limits.
☐ 2. The odometer reading is not the actual mileage. WARNING – ODOMETER DISCREPANCY
☐ 3. Exempt – Model year over 9 years old.

(25) ☐ This vehicle was restored prior to authorization. The undersigned is authorizing restoration after the fact on this form in lieu of form VP-209.

(26) Additional comments: _____

(27) _____ _____ _____ **(28)**_____
Printed Name of Nevada DMV Agency Representative | Signature of Nevada DMV Agency Representative | ID NO. | Date

VP-64 (Rev 5/2010)

INSTRUCTION FOR COMPLETING FORM VP64M

1. Indicate whether the motorcycle or trimobile is rebuilt, reconstructed, specially constructed or a manufactured kit.

PART I – SAFETY INSPECTION – To be completed by a Nevada registered garage, licensed motorcycle repair shop, licensed Nevada body shop or rebuilder.

2. Motorcycle or trimobile description must be completed in full including the vehicle identification number.
3. If items being inspected are acceptable, the applicable box must be checked after each item is inspected. Unless the item is not applicable (N/A), if an item being inspected is marked “fail” the vehicle cannot be registered until repairs are made.
4. The printed name and address and DMV business license number of the business completing the form.
5. Full legal name of person completing the form.
6. Signature and position of person completing the form.
7. The date the inspection was completed.

PART II – Affidavit of Construction for Rebuilt Salvage, Reconstructed or Specially Constructed Motorcycle / Trimobile
To be completed by the person who owns the motorcycle or trimobile.

8. Check appropriate box for how the vehicle was constructed.
9. The description of the vehicle.
10. Affiant’s printed full legal name as it appears on their Nevada Driver’s license or Identification card.
11. Affiant’s Driver’s license or Identification card number.
12. Affiant’s telephone number.
13. Affiant’s address.
14. Affiant’s signature.
15. Signature must be witness by Authorized Nevada DMV Representative.
16. The date Part II was completed.

PART III – Completed by an Authorized Nevada DMV Representative

17. VIN and part description must be completed for all components used.
18. Verify VIN from Part I.
19. Check box for VIN inspection fee.
20. Fill in if VIN was assigned or VIN from manufacturer’s kit.
21. Check box if VIN was assigned.
22. List the vehicle information if it is different than listed in Part I.
23. If a VIN was assigned, list the reason.
24. Complete the odometer statement.
25. If the vehicle was restored prior authorization, this box can be checked authorizing restoration after the fact.

26. Check if the motorcycle is labeled for off-road use.
27. Additional comments, if necessary.
28. Printed Name and Signature of Authorized Nevada DMV Representative. Include Employee Identification Number.
29. Date Part III was completed.

555 WRIGHT WAY
CARSON CITY, NV 89711-0700
Reno/Sparks/Carson City (775) 684-4DMV (4368)
Las Vegas Area (702) 486-4DMV (4368)
Rural Nevada or Out of State (877) 368-7828
www.dmvnv.com

CERTIFICATE OF INSPECTION / AFFIDAVIT OF MOTORCYCLE/TRIMOBILE CONSTRUCTION

NRS 482.223

(1) ☐ Rebuilt Salvage ☐ Reconstructed ☐ Specially Constructed ☐ Manufactured Kit

THIS FORM IS NOT INTENDED FOR USE AS AN OFF-HIGHWAY TWO WHEELED MOTORCYCLE CONVERSION FORM. USE FORM VP-254 FOR MOTORCYCLE CONVERSIONS.

Instructions

- All parts of this form must be completed.
- A Nevada Registered Garage, Motorcycle Repair Shop, Licensed Nevada Body Shop or Rebuilder must complete Part I.
- The vehicle owner must complete Part II and verify with a Nevada DMV Agency Representative or Notary Public.
- A Nevada DMV Agency Representative must complete Part III.
- A motorcycle intended for "on-road use" by the manufacturer will have a label or labels attached stating FMVSS and EPA standards have been met.
- All inspection items must be checked "PASS," indicating the item is in a safe operating condition before this motorcycle can be registered and/or titled
- **OWNERSHIP DOCUMENTS MUST ACCOMPANY THIS FORM**

Important: A new form and inspection must be completed if any inspection items are marked fail, not marked, improperly marked, or if corrections were made to the form.

PART I SAFETY INSPECTION

Must be completed by a Nevada Registered Garage, Licensed Motorcycle Repair Shop, Licensed Nevada Body Shop or Rebuilder

The work performed on the vehicle must meet the standards of the manufacturer for mechanical fitness and safety

(2) Year_____Make_____Model_____Type_____

(2) Vehicle Identification Number (VIN)

Important: This is not a conversion form. Reference Form VP-254 for motorcycle conversion information

Check (√) Appropriate Boxes

N/A (Turn Signals) is only for motorcycles built prior to January 1, 1973, not originally equipped with turn signals.

	PASS	FAIL	N/A		PASS	FAIL		PASS	FAIL
(3) Horn	☐	☐		Reflectors	☐	☐	Brake Light	☐	☐
Headlight(s)	☐	☐		Taillight	☐	☐	Fenders	☐	☐
Turn Signals	☐	☐	☐	Muffler(s)	☐	☐	Mirrors	☐	☐
Frame	☐	☐		DOT Legal Tires	☐	☐	Brakes	☐	☐

Before signing below all items above must be marked "pass" indicating the items are installed per NRS and in a safe operating condition.

Please Print or Type

(4) Legal Business Name _____
Name DMV Business License or Registration Number

(4) Address_____
City State Zip Code

By signing this document, I certify the described motorcycle is mechanically safe to operate and is equipped with all required devices necessary for safe operation upon the highway. I further certify that if repaired, all safety devices have been satisfactorily repaired to the applicable standards of the manufacturer and the motor vehicle repair industry.

(5) _____ **(6)** _____ **(7)** _____
Printed Full Legal Name of Affiant Signature and Position Date

PART II AFFIDAVIT OF CONSTRUCTION FOR REBUILT SALVAGE, RECONSTRUCTED, OR SPECIALLY CONSTRUCTED MOTORCYCLE

The undersigned, being duly sworn upon oath, deposes and says they are the owner of the motorcycle listed below. This motorcycle was rebuilt or built from parts and materials on hand, or parts and materials purchased from a supplier, or a manufactured kit purchased from a supplier, or purchased "as is" from a rebuilder, or otherwise lawfully acquired. The affiant or registered owner makes this affidavit as part of an application to the Nevada Department of Motor Vehicles for a Certificate of Registration and/or a Certificate of Title. The undersigned will indemnify and hold harmless the State of Nevada on account of the issuance of a Certificate of Registration and/or Certificate of Title for said motorcycle.

(8) ☐ Motorcycle was constructed from parts/material on hand ☐ Motorcycle was assembled from manufactured kit
☐ Motorcycle was built from purchased parts/material, receipts attached ☐ Motorcycle was purchased "as is" from rebuilder

Please Print or Type

(9) _____ _____ _____ _____ _____
Year | Make (if a manufactured kit) | Model | Type | No. of axles

(10) Affiant's Full Legal Name _____
(As appears on Drivers License or ID) First Middle Last

(11) Drivers License or ID Number _____ **(12)** Telephone Number _____

(13) Affiant's Address _____
City State Zip Code

(14) Affiant's Signature _____ Date_____

(15) _____ _____ _____ **(16)** _____
Printed name of Nevada DMV Agency Representative Or Notary Public. | Signature of Nevada DMV Agency Representative Or Notary Public | ID No. | Date

PART III COMPLETED BY AN AUTHORIZED NEVADA DMV REPRESENTATIVE

Note: Attach copies of any title or purchase documents, supplied by owner, showing information of components used from other vehicles.

(17) VIN & Part _____ VIN & Part_____

VIN & Part _____ VIN & Part_____

(18) VIN indicated in Part I Verified **(19) Vehicle Inspection Fee** ☐

(20) DMV Assigned VIN **(21) VIN Assignment Fee** ☐

(22) ☐ Different than listed in Part I Year_____ Make_____ Model_____ Type_____

(23) Reason VIN assigned _____

(24) Odometer Reading (as shown on apparatus)

NO TENTHS

If the vehicle's odometer apparatus only displays five numbers, please put an X in the first box.
☐ 1. The mileage stated is in excess of its mechanical limits.
☐ 2. The odometer reading is not the actual mileage. WARNING – ODOMETER DISCREPANCY
☐ 3. Exempt – Model year over 9 years old.

(25) ☐ This vehicle was restored prior to authorization. The undersigned is authorizing restoration after the fact on this form in lieu of form VP-209.
(26) ☐ This motorcycle is labeled by the manufacturer for on-road use.

(27) Additional comments: _____

(28) _____ _____ _____ **(29)** _____
Printed Name of Nevada DMV Agency Representative | Signature of Nevada DMV Agency Representative | ID NO. | Date

VP-64M (Rev.5/2010)

INSTRUCTION FOR COMPLETING FORM VP-223

1. Indicate whether the trailer is rebuilt, reconstructed, specially constructed or a manufactured kit.

PART 1 – INSPECTION
To be completed by an authorized representative of the Department of Motor Vehicles.

2. Trailer's empty weight.
3. Trailer's overall width.
4. If items being inspected are acceptable, check the applicable box after each item is inspected. Unless the item is not applicable (N/A), if an item being inspected is marked "fail" the vehicle cannot be registered until repairs are made.
5. Enter Vehicle Identification Number.
6. Check if a VIN was assigned.
7. The year, make, model, type and number of axles on the trailer.
8. Check the appropriate box with regard to the trailer including living quarters.
9. Enter reason the Vehicle Identification Number was assigned.
10. Enter additional comments, if necessary.
11. Print the Name of Authorized Nevada DMV Representative. The authorized Nevada DMV Representative should sign the form and include their employee identification number.
12. Enter date Part 1 was completed.

PART 2 – AFFIDAVIT OF TRAILER CONSTRUCTION
To be completed by the person who built or rebuilt the trailer, if available, or the owner.

13. Check appropriate box for how the trailer was constructed.
14. Enter Affiant's printed full legal name.
15. Enter Affiant's address.
16. Enter Affiant's Nevada driver's license or identification card number.
17. Enter Affiant's telephone number.
18. Affiant's signature.
19. Signature must be witnessed by a Notary Public or Authorized Nevada DMV Representative.
20. The figures can be used to detail any necessary repairs.

555 Wright Way
CARSON CITY, NV 89711-0700
Reno/Sparks/Carson City (775) 684-4DMV (4368)
Las Vegas Area (702) 486-4DMV (4368)
Rural Nevada or Out of State (877) 368-7828
www.dmvnv.com

CERTIFICATE OF INSPECTION AND AFFIDAVIT OF TRAILER CONSTRUCTION

NRS 482.220

(1) ☐ **Rebuilt Trailer** ☐ **Reconstructed Trailer** ☐ **Specially Constructed Trailer** ☐ **Manufactured Kit**

Instructions

- **Maximum Width of 102 inches, if exceeded a Special Permit is Required through NDOT**
- **Part I must be completed by an authorized Nevada DMV Representative**
- **All applicable items in Part I must be checked "Pass" and in safe operating condition before form is signed**
- **Owner must complete Part II if trailer is assembled by a person other than an established manufacturer**
- **Signature of Part II by Affiant must be witnessed by an authorized Nevada DMV Representative or notary**

PART I – INSPECTION

To be completed by an authorized Nevada DMV Representative

(2) Unladen Trailer Weight _____ **(3)** Overall Width _____

	PASS	FAIL		PASS	FAIL	N/A
(4) Brake Lights	☐	☐	Brakes (if required/over 1,500 lbs)	☐	☐	☐
Tail Lights	☐	☐	Clearance Lights (Over 80 inches in Width NRS 484D.140)	☐	☐	☐
Turn Signals	☐	☐	Marker Lights (Over 80 inches in Width NRS 484D.140)	☐	☐	☐
Reflectors	☐	☐	Safety Devices (Chains) NAC 484.130	☐	☐	
Fenders (NRS 484D.230)	☐	☐	Mudguards (Over 26,000 lbs.)	☐	☐	☐

Please Print or Type

(5) DMV Assigned VIN or Kit Manufacturer's VIN

(6) VIN Assignment Fee ☐

(7) Year _____ Make _____ Model _____ Type _____ No. of Axles _____

(8) Does the trailer include living quarters? ☐ Yes ☐ No

(9) Reason VIN assigned: _____

(10) Additional comments: _____

_____

(11) _____ _____ _____ **(12)** _____

Printed Name of Nevada DMV Agency Representative | Signature of Nevada DMV Agency Representative | ID NO. | Date

VP-223 (Revised 8/10)

PART 2 – AFFIDAVIT OF TRAILER CONSTRUCTION

To be completed by trailer owner

The undersigned, being duly sworn upon oath, deposes and says they are the owner of the trailer described in Part 1 of this form. This trailer was built from parts and materials on hand, purchased materials from a supplier, a manufactured kit, "as is" from a builder, or otherwise lawfully acquired. The affiant or registered owner makes this affidavit as part of an application to the Nevada Department of Motor Vehicles for a Certificate of Registration and/or a Certificate of Title. The undersigned will indemnify and save harmless the State of Nevada on account of the issuance of a Certificate of Registration and/or Certificate of Title for said trailer.

(13) ☐ Trailer was built from materials on hand ☐ Trailer built from purchased materials, (receipts attached)
☐ Trailer was purchased "as is" from builder ☐ Trailer was assembled from a manufactured kit

(14) Affiant's Full Legal Name_____

(15) Address_____
City State Zip Code

(16) NV Driver's License or ID Number _____ **(17)** Phone Number (_____)_____

(18) Affiant's Legal Signature_____ Date _____

(19) SUBSCRIBED AND SWORN to before me this _____ day of _____, 20_____.

_____
Notary Public or Authorized Nevada DMV Representative

(20)

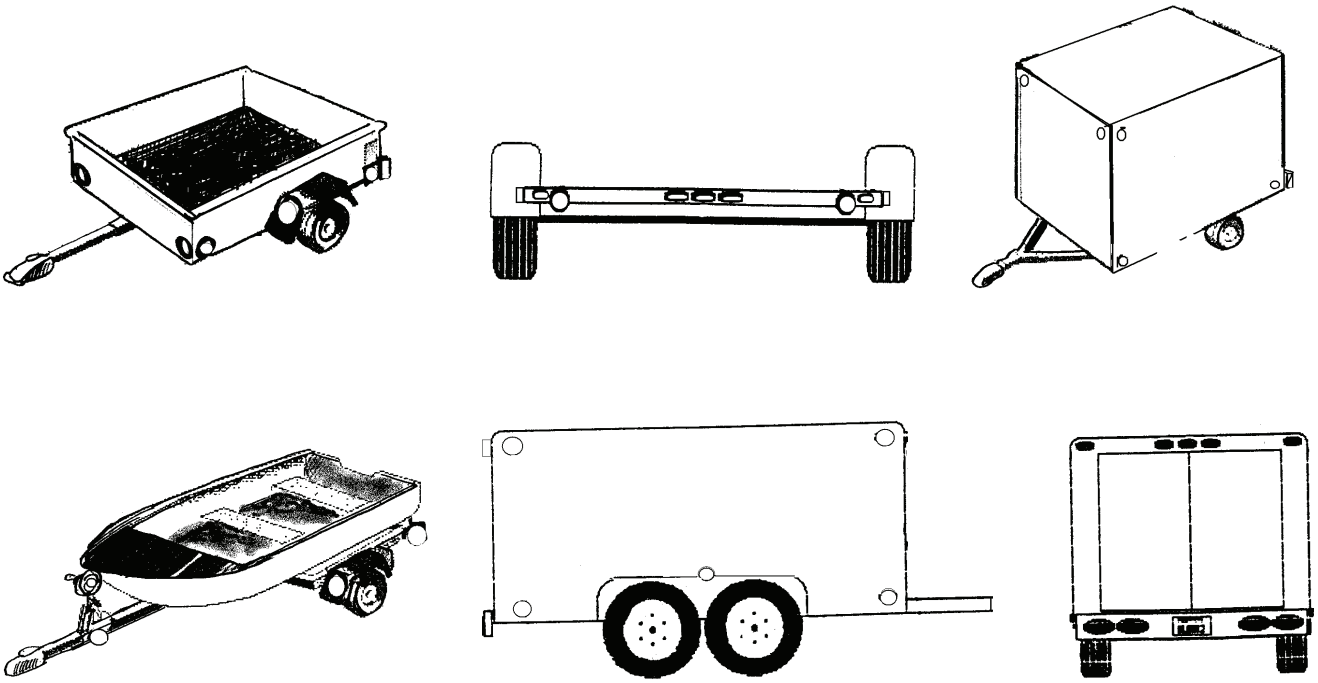

VP-223 (Revised 8/10)

CERTIFICATE OF INSPECTION FOR REBUILT VEHICLES (NOT SALVAGE)
(Form VP-64A)
NRS 482.098, 482.220 & 482.223

Certificate of Inspection for Rebuilt Vehicles – Not Salvage (Form VP-64A) must be completed in order to register or title a vehicle which has had one or more major components replaced. Major components are cowl assembly, rear clip assembly, roof assembly, floor pan assembly, conventional frame coupled with one additional major component, or complete front inner structure for a unibody. The term “rebuilt” does not include a vehicle for which the only change is the installation of a truck cab assembly. Form VP-64A must also be accompanied by the Certificate of Title and other documentation, as required.

An owner or authorized employee of a Nevada registered garage, licensed body shop, or rebuilder must certify that a rebuilt vehicle is repaired and must comply with the standards published and commonly applied in the motor vehicle repair industry.

If any safety equipment that was present in a motor vehicle at the time it was manufactured is repaired or replaced, the equipment must be repaired or replaced to the standards published and commonly applied in the motor vehicle repair industry.

An Authorized DMV Agency Inspector must complete Part III of Form VP-64A.

Nevada Certificates of Title issued for vehicles using Form VP-64A will be branded in accordance with statements made on the form by the owner.

INSTRUCTIONS FOR COMPLETING FORM VP-64A

PART I – INSPECTION
Must be completed by a Nevada registered garaged, licensed Nevada body shop or rebuilder.

1. Year, make, model and type of vehicle.
2. Vehicle identification number.
3. Check the appropriated box or boxes of the major components replaced.
4. Enter the business name.
5. Enter the business license number as it is registered with the DMV.
6. Enter the current address of the business.
7. Printed legal name of Affiant.
8. Signature of Affiant.
9. Date inspection was completed.

PART II – AFFIDAVIT OF CONSTRUCTION FOR A REBUILT MOTOR VEHICLE
To be completed by the owner of the rebuilt vehicle.

10. Check appropriate box for how the vehicle was rebuilt.
11. Enter the year, make, model, type and number of axles of the vehicle.
12. Enter Affiant's printed full legal name as it appears on the Nevada driver's license or Nevada identification card.
13. Enter Affiant's Nevada driver's license or identification number.
14. Enter Affiant's telephone number.
15. Enter the Affiant's current address.
16. Enter the Affiant's signature.
17. Signature must be witnessed by an Authorized Nevada DMV Representative.
18. Enter the date the form was signed.

PART III
To be completed by a Nevada DMV agency representative.

19. VIN and part description must be completed for all components used.
20. Verify VIN from Part I.
21. Check box for VIN inspection fee.
22. Fill in if VIN was assigned by the DMV.
23. Check box for VIN assignment fee.
24. List the vehicle information if it is different than listed in Part I.
25. If a VIN was assigned, list the reason.
26. Complete the odometer statement.
27. Additional comments, if necessary.
28. Printed Name and Signature of Authorized Nevada DMV Agency Representative. Include Employee Identification Number.
29. Date Part III was completed.

555 WRIGHT WAY
CARSON CITY, NV 89711-0700
Reno/Sparks/Carson City (775) 684-4DMV (4368)
Las Vegas Area (702) 486-4DMV (4368)
Rural Nevada or Out of State (877) 368-7828
www.dmvnv.com

CERTIFICATE OF INSPECTION FOR REBUILT VEHICLES (NOT SALVAGE)

NRS 482.098, NRS 482.220 & NRS 482.223

OWNERSHIP DOCUMENTS MUST ACCOMPANY THIS FORM FOR THE DEPARTMENT TO TITLE OR REGISTER.

Instructions

- All parts of this form must be completed.
- Part I must be completed by a Nevada Registered Garage, Licensed Nevada Body Shop or Rebuilder.
- Part II must be completed by the vehicle owner and verify with a Nevada DMV Agency Representative or Notary Public.
- Part III must be completed by a Nevada DMV Agency Representative.

Important: Corrections on this form will not be accepted. – If a mistake is made, you must complete a new form.

PART I Safety Inspection

Must be completed by a Nevada Registered Garage, Licensed Nevada Body Shop, or Rebuilder

(1) Year_____ Make_____ Model_____ Type_____

(2) Vehicle Identification Number (VIN)

(3) Check (√) the Appropriate Box(es) to indicate components replaced.

☐ Cowl ☐ Rear clip ☐ Roof assembly ☐ Floor pan assembly
☐ Complete front inner structure of a unibody ☐ Conventional frame & one major component

NOTE: In addition to all other disclosures, by signing *Part I* below the affiant attests that the item(s) checked have been installed to the applicable standards of the manufacturer and the automotive repair industry and are in a safe operating condition.

Please Print or Type

(4) Legal Business Name _____ **(5)** _____
Name DMV Business License or Registration Number

(6) Address_____
City State Zip Code

By signing this document, I certify the described vehicle is mechanically safe to operate. I further certify the items indicated have been satisfactorily repaired to the applicable standards of the manufacturer and the motor vehicle repair industry. In addition, I certify any safety equipment including occupant restraint devices, which were present in the vehicle at the time the vehicle was manufactured are present and operational to the standards of the manufacturer.

(7) _____ **(8)** _____ **(9)** _____
Printed Full Legal Name of Affiant Signature and Position Date

PART II AFFIDAVIT OF CONSTRUCTION FOR A REBUILT MOTOR VEHICLE

The undersigned, being duly sworn upon oath, deposes and says they are the owner of the vehicle described on this document. This vehicle was rebuilt from parts and materials on hand, or parts and materials purchased from a supplier, or otherwise lawfully acquired. The affiant or registered owner makes this affidavit as part of an application to the Nevada Department of Motor Vehicles for a Certificate of Registration and/or a Certificate of Title. The undersigned will indemnify and hold harmless the State of Nevada on account of the issuance of a Certificate of Registration and/or Certificate of Title for said vehicle.

(10) ☐ Vehicle was rebuilt from parts/material on hand ☐ Vehicle was rebuilt from purchased parts/material, receipts attached

(11) _____ _____ _____ _____ _____
Year Make Model Type No. of axles

Please Print or Type

(12) Affiant's Full Legal Name _____
(As appears on Drivers License) First Middle Last

(13) NV Driver's License or ID Number _____ **(14)** Telephone Number (____)_____

(15) Affiant's Address _____
City State Zip Code

(16) Affiant's Signature _____ Date_____

(17) _____ _____ _____ **(18)** _____
Printed name of Nevada DMV Agency Representative Or Notary Public
Signature of Nevada DMV Agency Representative Or Notary Public
ID No. Date

PART III Completed by a Nevada DMV Agency Representative

Note: Attach copies of any title or purchase documents showing information of components used from other vehicles.

VIN & Part _____ VIN & Part_____
(19)
VIN & Part _____ VIN & Part_____

(20) VIN indicated in Part I Verified

(21) Vehicle Inspection Fee ☐

(22) DMV Assigned VIN

(23) VIN Assignment Fee ☐

(24) ☐ Different than listed in Part I Year_____ Make_____ Model_____ Type_____

(25) Reason VIN assigned _____

(26) Odometer Reading (as shown on apparatus)
NO TENTHS

If the vehicle's odometer apparatus only displays five numbers, please put an X in the first box.
☐ 1. The mileage stated is in excess of its mechanical limits.
☐ 2. The odometer reading is not the actual mileage. WARNING – ODOMETER DISCREPANCY
☐ 3. Exempt – Model year over 9 years old.

(27) Additional comments: _____

(28) _____ _____ _____ **(29)** _____
Printed name of Nevada DMV Agency Representative Signature of Nevada DMV Agency Representative ID NO. Date

"Rebuilt vehicle" (NRS 482.098) means:

1. A vehicle for which one or more of the following major components have been replaced:
   (a) Cowl assembly;
   (b) Rear clip assembly;
   (c) Roof assembly;
   (d) Floor pan assembly;
   (e) Conventional frame coupled with one additional major component; or
   (f) Complete front inner structure for a unibody.

Note: The term "rebuilt" does not include a vehicle for which the only change is the installation of a truck cab assembly.

Definitions

- *"Complete front inner structure for a unibody"* (NRS 482.0154) means the weld on structure of a vehicle, including, without limitation, the radiator support. Left and right aprons, upper and lower rails and strut towers, designed and intended to be located forward of the cowl assembly.
- *"Conventional frame"* (NRS 482.0157) means the main longitudinal structural members of the chassis of a vehicle used as the major support in the construction of the vehicle.
- *"Cowl assembly"* (NRS 482.018) to mean the forward structural portion of a vehicle to which are intended to be attached all or a part of the windshield frame, fire wall, housing of the instrument panel and hinges for the front doors.
- *"Floor pan assembly"* (NRS 482.0385) means the pans designed and intended to form the floor of the passenger compartment of a vehicle.
- *"Rear clip assembly"* (NRS 482.0965) means the entire rear structural portion of a vehicle designed and intended to be located behind the rear seat of the vehicle.
- *"Roof assembly"* (NRS 482.106) means the structural parts of a vehicle, including, without limitation, more than one-half of the vertical roof supports, the framework of the roof and the exterior metal skin that together are designed and intended to be located over the passenger compartment to form the roof of the vehicle.

VP-64A (8-2010)

VEHICLE INSPECTION CERTIFICATE
(FORM VP-15)

Vehicle Inspection Certificate (Form VP-15) is a form provided by the Department and when completed shows evidence that a vehicle inspection was completed by a DMV inspector or an authorized representative (including law enforcement) to verify the vehicle identification number.

Verification of the vehicle identification number (VIN) will be confirmed by a physical inspection of the vehicle.

The physical inspection of the vehicle must be completed by a Nevada DMV employee or authorized Nevada DMV representative.

Verification of the VIN ensures the accuracy of the information used to create a Nevada Certificate of Title.

INSTRUCTIONS FOR COMPLETING FORM VP-15

1. Date: Enter the date the inspection was completed.

2. Vehicle Description: Enter the year, make, model and type of vehicle.

3. Low Speed Vehicles must meet safety standards set forth in Federal Motor Safety Standard No. 500 at 49 C.F.R. § 571.500 and if registered in Clark or Washoe Counties must pass an emission test, if applicable.

4. Vehicle Identification Number: Enter the complete vehicle identification number as it appears on the vehicle. Do not use other documents to retrieve this information. After inspecting the vehicle, compare the VIN from the vehicle to that on the other title documents to ensure they match.

5. Odometer Reading: Record the odometer reading as it appears on the vehicle's odometer apparatus.

6. Cylinders/Rotor: Enter whether the vehicle has cylinders or rotors and how many.

7. If the vehicle is a trailer, indicate whether the vehicle has living quarters or not.

8. Fuel: Select the type of fuel this vehicle is powered by, if applicable.

9. Remarks: Comment on any unusual circumstances encountered during the inspection.

10. Authorized Officer-Inspector: The name and signature of the authorized individual who completed the inspection.

11. Badge or ID#: The badge number of the officer or employee ID of the authorized individual who completed the inspection.

12. Date: Date of when the inspection was conducted.

13. Address: Address of the authorized individual who completed the inspection.

14. Agency Name: Record the name of the agency conducting the inspection. Indicate whether the agency is law enforcement or an authorized agency such as a licensed Nevada dealer.

Carson City, NV 89711
Reno/Sparks/Carson City (775) 684-4DMV (4368)
Las Vegas Area (702) 486-4DMV (4368)
Rural Nevada or Out of State (877) 368-7828
www.dmvnv.com

IMPORTANT NOTICE: NEVADA LAW REQUIRES REGISTERED OWNERS TO MAINTAIN CONTINUOUS INSURANCE COVERAGE ON REGISTERED VEHICLES, FROM A LICENSED NEVADA INSURANCE COMPANY TO AVOID A $250 FEE.

NRS 482.220

VEHICLE INSPECTION CERTIFICATE

FOR VEHICLE IDENTIFICATION NUMBER VERIFICATION

(To be completed by an Authorized Nevada DMV Representative or any Law Enforcement Officer)

Please Print or Type

(1) Date _____

I certify that I have examined the following vehicle:

(2) Year _____ Make _____ Model _____ Body Type _____

(3) Federal Certification Safety Label and Emissions Label (LSVs only) ☐ Yes ☐ No

(4) Vehicle Identification Number

(5) Odometer Reading (as shown on apparatus) | | | | | | | **NO TENTHS**

If the vehicle's odometer apparatus only displays five numbers, please put an X in the first box. Not all LSVs will have an odometer.

☐ 1. The mileage stated is in excess of its mechanical limits.
☐ 2. The odometer reading is not the actual mileage. **WARNING – ODOMETER DISCREPANCY**
☐ 3. Exempt – Model year over 9 years old.

(6) ☐ Cylinders _____ ☐ Rotor _____

(7) If vehicle being inspected is a trailer, does it include living quarters? ☐ Yes ☐ No

(8) Fuel: ☐ Gas ☐ Diesel ☐ Propane ☐ Electric ☐ Other (see remarks)

REMARKS _____

(9) _____

Authorized Officer-Inspector - Printed Name **(10)** _____ Badge or **(11)** ID # _____

Authorized Officer-Inspector - Signature **(10)** _____ **(12)** Date _____

(13) If other than DMV Inspection Station _____
Address City State Zip Code

(14)
☐ Enforcement Agency _____
Agency

☐ Nevada Authorized Agency _____
Agency

VP15 (Rev 5/10)

MOTORCYCLE CONVERSION FORM VP-254
NRS 482, 484, 486

The Motorcycle Highway Use Affidavit (Form VP-254) must be completed in order to register or title an off-highway two-wheeled motorcycle that has been converted for on-road use. The Certificate of Title and other documentation, as required, must also accompany the VP-254.

Only motorcycles not originally equipped or certified for use on public roads that travel on two wheels with a seat designed to be straddled by the operator and with handlebar-type steering control may be converted. The following types of vehicles will not be allowed to be converted for on-road use: all-terrain vehicles, dune buggies, snowmobiles, trimobiles, mopeds, pocket bikes, motor vehicles registered by the Department, side-by-sides, utility vehicles, grey-market vehicles, non-road 3-wheeled vehicles and, as determined by the Department, any other vehicle that was not originally certified by the manufacturer for use on public roads.

An owner or authorized employee of a Nevada registered motorcycle dealer or Nevada registered motorcycle repair shop must certify that a converted off-highway two-wheeled motorcycle is mechanically safe to operate on Nevada public roads, and that it is equipped with all required devices necessary for safe operation upon the highway in accordance with all applicable Nevada Revised Statutes and Federal requirements. In addition, the person certifying the motorcycle must attest to the fact that all safety devices have been installed in accordance with applicable standards of the manufacturer and the motor vehicle repair industry.

Nevada Certificates of Title issued for vehicles using Form VP-254 will be permanently branded as RECONSTRUCTED.

A motorcycle converted in Nevada may not be lawful to operate on-road in another state, depending on the laws and requirements of that state.

The VP-254 may not be used to convert any vehicle labeled for “off-road use only” for on-road use vehicle, other than an off-highway two-wheeled motorcycle.

INSTRUCTIONS FOR COMPLETING FORM VP-254

PART I – SAFETY INSPECTION – To be completed by a Nevada licensed motorcycle dealer or Nevada registered motorcycle repair shop if the motorcycle is being registered for the first time in Nevada.

1. Enter the year, make and model of the motorcycle being converted.
2. Enter the vehicle identification number as it appears on the vehicle.
3. If items being inspected are acceptable, the applicable box must be checked after each item is inspected. If an item being inspected is marked "fail" the vehicle cannot be registered until repairs are made.
4. The printed name and DMV business license number of the business completing the form.
5. The address of the business completing the form.
6. Full legal name of person completing the form.
7. Signature and position of person completing the form.
8. The date the inspection was completed.

PART II – To be completed by an Authorized Nevada DMV Representative if the motorcycle is being registered for the first time in Nevada. A standard VIN inspection fee shall be charged.

9. Verify and enter the VIN indicated in Part I.
10. Check box for VIN inspection fee.
11. Complete the odometer statement.
12. Enter additional comments, if applicable.
13. Printed name and signature of Nevada DMV Agency Representative.
14. The date Part II was completed.

PART III - To be completed by the Vehicle Owner in all cases where a converted off-highway two wheeled motorcycle is being registered for use on the public roads and highways in Nevada. This includes first time registration or change of ownership.

15. The year, make and model of the vehicle.
16. Affiant's printed full legal name as it appears on their Nevada Driver's license or Identification card.
17. Affiant's signature.
18. Affiant's Driver's license or Identification card number.
19. Affiant's address.
20. Signature must be witness by Authorized Nevada DMV Representative.
21. The date Part III was completed.

555 WRIGHT WAY
CARSON CITY, NV 89711-0700
Reno/Sparks/Carson City (775) 684-4DMV (4368)
Las Vegas Area (702) 486-4DMV (4368)
Rural Nevada or Out of State (877) 368-7828
www.dmvnv.com

MOTORCYCLE HIGHWAY USE AFFIDAVIT **NRS 482, 484, 486**

By issuing a certificate of registration and/or certificate of title, the Nevada Department of Motor Vehicles does not certify, warranty, guarantee or in any way represent the described motorcycle as safe for operation upon the highway.

This form may be used for a registered owner and qualified licensed dealer or registered motorcycle repair shop to certify a 2-wheeled manufactured motorcycle not originally equipped or certified for use on public roads. The certification only applies to motorcycles that travel on two wheels with a seat designed to be straddled by the operator and with handlebar-type steering control. This includes all-terrain 2-wheeled motorcycles. Certification for on-road use of the following vehicle types will **not** be allowed: all-terrain vehicles, dune buggies, snowmobiles, trimobiles, mopeds, pocket bikes, motor vehicles registered by the Department, side-by-sides, utility vehicles, grey-market vehicles, non-road 3-wheeled vehicles and, as determined by the Department, any other vehicle that was not originally certified by the manufacturer for use on public roads.

Instructions

- **Print clearly or type. A form that cannot be read will not be accepted.**
- All parts of this form must be completed if the vehicle is not currently registered for use on road in Nevada.
- Only Part III of this form must be completed if the vehicle has been previously registered for use on road in Nevada and is being registered under new ownership.
- A Nevada licensed motorcycle dealer or Nevada registered motorcycle repair shop must complete Part I, if applicable.
- A Nevada DMV Agency Representative must complete Part II, if applicable.
- The vehicle registered owner must complete Part III and verify with a Nevada DMV Agency Representative or Notary Public.
- All inspection items must be checked "PASS," indicating the item is present and in a safe operating condition before this motorcycle can be registered and/or titled, if applicable.
- **OWNERSHIP DOCUMENTS (*Title, MSO/MCO, Statement of Facts, Dealer Report of Sale, Secure Power of Attorney, etc.)* MUST ACCOMPANY THIS FORM.**

Important: If a Safety Inspection is required, a new form and inspection must be completed if any inspection items are marked FAIL, not marked, improperly marked, or if corrections were made to the form.

PART I SAFETY INSPECTION

Certification must be completed by a Nevada Licensed Motorcycle Dealer or Nevada Registered Motorcycle Repair Shop.
The work performed on the vehicle must meet the standards of the manufacturer for mechanical fitness and safety.

(1) Year_____ Make_____ Model_____

(2) Vehicle Identification Number (VIN)

(3) Check (√) Appropriate Boxes

	PASS	FAIL		PASS	FAIL		PASS	FAIL
Horn	☐	☐	Reflectors	☐	☐	Brake Light	☐	☐
Headlight(s)	☐	☐	Taillight	☐	☐	Fenders	☐	☐
Turn Signals	☐	☐	Muffler(s)	☐	☐	Mirrors	☐	☐
Frame	☐	☐	DOT Legal Tires	☐	☐	Brakes	☐	☐

Before signing below, all items above must be marked "pass," indicating the items are installed per NRS and in a safe operating condition.

Please Print Clearly or Type

(4) Legal Business Name _____
Name DMV Business License or Registration Number

(5) Address_____
City State Zip Code

By signing this document, I understand I am accepting responsibility for certifying the described converted off-highway 2-wheeled motorcycle is mechanically safe to operate on Nevada public roads. This converted off-highway 2-wheeled motorcycle is equipped with all required devices necessary for safe operation upon the highway in accordance with all applicable NRS chapters and Federal requirements. I further certify that all safety devices have been installed in accordance with the applicable standards of the manufacturer and the motor vehicle repair industry.

(6) _____ **(7)** _____ **(8)** _____
Printed Full Legal Name of Affiant Signature and Position Date

PART II Completed by an Authorized Nevada DMV Representative

(9) VIN indicated in Part I Verified

(10) VIN Inspection Fee ☐

(11) Odometer Reading (as shown on apparatus)

NO TENTHS

If the vehicle's odometer apparatus only displays five numbers, please put an X in the first box.

☐ 1. The mileage stated is in excess of its mechanical limits.
☐ 2. The odometer reading is not the actual mileage. WARNING – ODOMETER DISCREPANCY
☐ 3. Exempt – Model year over 9 years old.

(12) Additional comments: _____

_____

(13) _____ _____ _____ **(14)** _____
Printed Name of Nevada DMV Agency Representative | Signature of Nevada DMV Agency Representative | ID No. | Date

PART III Completed by Vehicle Owner & Verified by DMV Representative or Notary Public

The registered owner of the above-described converted off-highway 2-wheeled motorcycle hereby acknowledges, accepts and agrees that the original manufacturer does not certify the motorcycle for operation upon a public highway. However, the registered owner certifies the motorcycle has been modified for safe use upon Nevada public highways and meets all applicable safety and equipment requirements of Nevada Revised Statutes and Federal Law. The undersigned registered owner further acknowledges, accepts and agrees that the State of Nevada, Department of Motor Vehicles does not certify, warranty or guarantee or in any way represent the above-described motorcycle is safe for operation upon public highways. The undersigned registered owner of the above-described motorcycle hereby acknowledges, accepts and agrees the described motorcycle "is in a condition to be operated safely on the highways of this State," and it is the registered owner's responsibility to affirm the described motorcycle is, in fact, safe for operation upon Nevada public highways.

The undersigned registered owner of the described motorcycle certifies this motorcycle has been modified and the registered owner intends to operate it upon public highways in the State of Nevada. Furthermore, the registered owner wishes to have the vehicle registered and/or titled by the State of Nevada, DMV and does hereby expressly agree to indemnify, hold harmless and defend, not excluding the State's right to participate, the State of Nevada, Department of Motor Vehicles, and its current and former employees, from and against all liabilities, claims, actions, damages, losses, and expenses, including, without limitation, reasonable attorney's fees and costs, arising out of the operation of the described motorcycle after registration by the Nevada Department of Motor Vehicles. The undersigned registered owner of the described motorcycle also acknowledges the title of the motorcycle will have the brand of **RECONSTRUCTED** permanently attached to it.

Please Print Clearly or Type

(15) _____ _____ _____
Year | Make | Model

(16) Affiant's Full Legal Name _____
(As appears on Drivers License) First | Middle | Last

(17) Affiant's Signature _____ **(18)** NDL/ID#_____ Date_____

(19) Affiant's Address _____
City | State | Zip Code

(20) _____ _____ _____ **(21)** _____
Printed Name of Nevada DMV Agency Representative or Notary Public | Signature of Nevada DMV Agency Representative or Notary Public | ID No. | Date

VP-254 (Orig. 3/2010)

TITLE FEES
NRS 482.429

A title fee must be submitted for the following transactions:

- Vehicles sold or leased to a governmental agency including city, county, state, etc.
- All unregistered vehicles
- Commercial vehicles registered by the Motor Carrier Branch of the Nevada Department of Motor Vehicles
- Lease terminations
- Vehicles being titled in a dealership's name
- Repossessed vehicles
- Unregistered vehicles being titled to perfect a lien against the vehicle
- Applications for a duplicate Nevada Certificate of Title, unless Form VP-206 is presented
- All private-party transfers and dealer sales

Fees:

- First-time, change of ownership or duplicate certificates of title--$20.00
- Vehicles not physically present in or registered in Nevada--$35.00

A Title Processing Fee in the amount of $8.25 must be charged on all title transactions that include a complete change of ownership.

Examples of when a title-processing fee is charged:
- Dealer sales
- Private party sales
- Sale between family members
- Gift transactions
- Any sale or transaction that is processed involving a change of ownership
- Lien sale transaction, lease assumptions and lease terms
- Lease buyouts and at least one registered owner's full legal name is remaining on the title

Do not charge a Title Processing Fee for:
- Salvage titles
- Non-repairable vehicle certificates
- Duplicate titles
- Removing a lienholder
- Removing a name (if 1 name from the original title remains on the new title)

- Changing a last name if person is “one-in-the-same” (e.g. married, legal name change)
- Changing an address
- Manufacturer’s Statement of Origin or Manufacturer’s Certificate of Origin is in the registered owner’s full legal name

Salvage Title Fees:

• Licensed Nevada Automobile Wrecker	No fee
• Out-of-State Automobile Wrecker	$10.00
• Licensed Nevada Salvage Pool	$10.00
• In-State or Out-of-State Insurance Companies	$10.00
• Out-of-State Vehicle Dealers (must be registered with a Salvage Pool)	$10.00

SECTION III

COMPLETING

OWNERSHIP DOCUMENTS

DEALER, REBUILDER, OR LESSOR'S REPORT OF SALE OR LEASE
(FORM VP-101) Revised 9/2006
NRS 482.423 - 482.424

A *Dealer, Rebuilder, or Lessor's Report of Sale or Lease* (DRS) is the primary document used to register a vehicle sold or leased to a Nevada resident by a licensed Nevada dealer.

For sales to individuals, the name of the purchaser that appears on the DRS must be the full legal name as it appears on the purchaser's driver's license or state issued identification card.

A Nevada dealer may not issue a DRS to:

- Themselves
- Other dealerships – wholesale vehicles to be resold by that dealership
- An out-of-state resident purchasing a vehicle in Nevada
- An out-of-state dealership when handling a sale as a courtesy delivery
- Buyers of off-road vehicles not subject to registration
- For a Recreational Park Trailer. (Recreational Park vehicles are not registered with the Department.)

A DRS is issued the same day the purchase or lease of a vehicle becomes final. The date of transaction cannot be changed.

A dealer must furnish a copy of the DRS to the buyer not less than 10 days before the expiration of the temporary placard, NRS 482.423 and 482.424

A DRS must be issued when another dealer purchases a new or used vehicle for personal or business use that they are not authorized to resell. In addition to issuing a DRS, the selling dealer must collect and remit sales tax.

The DRS must be completed in full and all information on the DRS must match the information contained on the Manufacturer's Certificate of Origin or outstanding title.

The DRS must be typed or printed clearly in ink. If hand-printed, block and upper case letters are recommended.

If an error is made on the DRS, do not use correction fluid or correction tape to correct the information. With the exception of the date of transaction, to correct any error:

- Draw a line through the entire error
- Print or type the correct information above the error
- Stamp or print the dealership's name
- Initial the correction

If any copy of the DRS is lost, **DO NOT ISSUE A SECOND DRS**. Make a photocopy of the lost DRS from the DRS book and write the following statement on the photocopy:

"I hereby certify that this is a true and exact copy of the original."

- The statement must be signed by an authorized agent of the dealership
- The DRS must include the Dealer's Placard Number issued to the purchaser and the expiration date of the Placard
- After the vehicle is sold, the dealer must submit the required documents to the Department's Carson City office to complete the transfer of ownership
    - If the vehicle is new, the documents must be submitted within 20 days of the date of transaction
    - If the vehicle is used, the documents must be submitted within 30 days of the date of transaction

Submittals for an extension of time on a DRS may be requested by the dealer (refer to Section X of this guide for additional information).

The DRS consists of three copies distributed as follows:

- The original (white) copy must be attached to all original required title documents and forwarded to:
  Department of Motor Vehicles
  Attn: Titles
  555 Wright Way
  Carson City, Nevada 89711
- The customer's copy (green) is given to the purchaser. It is used to register the vehicle. The vehicle must be registered within 30 days of the date on the Dealer's Placard. Late fees will be assessed if the vehicle is not registered within the 30-day period. If the 30th day falls on a weekend or a holiday, registration must be completed by the end of the next business day.
- The dealer's copy (yellow) is the dealer's record of sale and must be retained for 3 years from the date of transaction.

Nevada law requires registered owners to maintain insurance coverage on registered vehicles, from an insurance company licensed in the State of Nevada to avoid a $250 fine.

Effective February 1, 2010, motorists renewing a vehicle registration, registering for the first time or requesting different license plates must present proof of Nevada liability insurance by presenting a current Nevada liability insurance card.

INSTRUCTIONS FOR COMPLETING THE DEALER OR REBUILDER, OR LESSOR'S REPORT OF SALE OR LEASE (DRS FORM VP-101)

Below you will find information on the completion of the DRS. Please note; if any information is missing, the DRS will be rejected. If information is found to be missing at the time of registration, the purchaser will be asked to return to the dealership to have the DRS corrected. The title work will also be returned to the dealership for correction. The DRS can be corrected by drawing a line through the incorrect information, then writing the correct information above, or adding the missing data. Use a company stamp, date and sign, or initial on the margin by the correction.

1. **Vehicle Identification Number**: Completion of Form VP-101 is the dealer's confirmation that a physical inspection of the vehicle identification number was completed. This information must match the vehicle as well as all corresponding documents. If the vehicle is a motor home, indicate the chassis frame number. NRS 482.215 and 482.235 require the vehicle identification number be used when registering a vehicle.

2. **Vehicle Description**:
   - Year
   - Body Type
   - Model
   - Make
   - Axles – Record the number of axles for trailers.
   - Cylinders/Rotors

   NRS 482.245 requires the vehicle description be on the vehicle registration and title.

3. **Fuel**: When the vehicle is bi-fuel, both fuel types must be entered. For trailers, enter "N/A" or "Not Applicable." NRS 482.215 requires a vehicle to pass an emission test in certain areas of Clark and Washoe counties. Some fuel types are exempt from emission tests, and some fuel types require specific emission tests.

4. **MSRP**: MSRP is the Manufacturer's Suggested Retail Price. <u>Base</u> MSRP is required for all new vehicles. For used vehicles enter "USED." Per NRS 371.050, the MSRP will determine the value of the vehicle to calculate the basic governmental services tax and applicable supplemental governmental services taxes to be charged.

5. **Unladen Weight**: Unladen weight is required for new motortruck, truck tractor, trailer, or bus vehicles. For other vehicle types, enter "N/A" or "Not Applicable." For a used vehicle, enter "USED." Per NRS 482.483 the unladen weight of the vehicle is used to determine additional registration fees.

6. **Gross Weight**: The gross weight is required for new motortruck, truck tractor or bus vehicles. For other vehicle types, enter "N/A" or "Not Applicable." For a used vehicle, enter "USED." The declared gross weight is used to determine the value of the vehicle when calculating the registration fee, basic governmental services tax, and applicable supplemental governmental services taxes charged in accordance with NRS 371.050.

7. **Length**: The unit length is required for all travel trailers and motor homes. For other vehicle types enter "N/A" or "Not Applicable." NRS 484.739 outlines the restrictions on vehicle length.

   Note: A Certificate of Title will not be issued without complete information for the travel trailer or motor home.

8. **County Based In**: County in which the vehicle is going to be located must be included on the DRS per NRS 482.245. According to NRS 371.045, counties are permitted to charge a supplemental governmental services tax. NAC 445B.593 and 594 identify the requirement for emission testing if the vehicle is based in certain areas of Clark and Washoe counties.

9. **Date of Transaction**: NRS 482.423, 482.424, 482.4235, 482.4245 defines the actual date of the sale or lease of a new or used vehicle as the day the DRS is executed. This date may not be changed, extended, or altered.

10. **Placard Number**: Enter the number of the Dealer Placard that was issued to the customer and the expiration date of the Placard. If a Dealer Placard was not issued, enter "None." NRS 482.423, 482.4235, 482.434, and 482.4345 provide for the authority to issue a temporary placard. The placard number is required on the DRS for auditing purposes.

11. **Full Sale Price**: Enter the full sale price of the vehicle, including the sales tax. If the vehicle was leased, enter the word "LEASED" in place of a sales amount. If the vehicle was donated, enter the word "DONATED." NRS 482.096, 372.025, and 372.065 define purchase price, gross receipts, and sale price, respectively.

12. **Placard Expiration Date**: Enter the expiration date of the Dealer Placard. If a Dealer Placard was not issued, enter "None." NRS 482.423, 482.4235, 482.434, and 482.4345 provide for the authority to issue a temporary placard for a limited amount of time. The placard expiration date is required on the DRS for auditing purposes.

13. **Sales Tax Collected**: Based on the sale of the vehicle, indicate "YES" or "NO" by marking the appropriate box. Please note that NRS 372.105 requires Nevada licensees to collect sales tax on all retail sales in Nevada.

13a. If an auction is liquidating a vehicle for a government entity, if the "NO" box is checked, below the box write in "TAX EXEMPT/GOV'T FLEET SALE".

14. **This transaction is a**: Based on the transaction type, mark the appropriate box for sale or lease. NRS 482.423, 482.4235, 482.434, and 482.4345 govern vehicle sales and leases.

15. **Rebuilt Vehicles**: Indicate whether the vehicle was rebuilt or not by marking the appropriate box. Mark "Yes" if the vehicle has been rebuilt or reconstructed. NRS 482.245 requires disclosure when a vehicle has been rebuilt.

16. **Odometer Reading**: Record the actual reading of the vehicle's odometer apparatus. Mark the box that best describes the odometer reading based on the stated options (1. Actual Miles, 2. Exceeds mechanical limits, 3. Not actual – odometer discrepancy, or 4. Exempt – over 9 years old). NRS 482.245 requires odometer reading and disclosure.

17. **Sold To**: Record the registered owner's full legal name exactly as it appears on the customer's driver's license, identification card, or business license. This is the name that will be recorded on the vehicle registration certificate and Certificate of Title when created. Customers purchasing a vehicle(s) for a business are not required to present their business license. NRS 481.0515 requires the customer's full legal name be placed on the vehicle registration and title.

    Note:
    - If the registration is to read "doing business as" enter "DBA" preceding the business name.
    - If the vehicle is leased, the words "Lessee" and "Lessor" must be included prior to the full legal name.
    - If there is more than one Lessee, separate the Lessees with a semi-colon ";".

18. **And/Or**: If the registration and title are in more than one name, the appropriate box must be marked to indicate "and" or "or." Using "and" will require the signatures of all persons on the title to release interest in the vehicle. "OR" will allow for one person to sign the title of the two or more recorded owners, to release interest in the vehicle.

19. **Nevada Driver's License, Identification Card Number, or FEIN for businesses**: Enter the number based on the document presented during the purchase transaction. Per NRS 481.0515 the customer's full legal name must be placed on the vehicle registration and title. The DMV will use these numbers to ensure the full legal name of the owner is placed on the registration and title.

Note:

- If the customer does not have a Nevada driver's license or identification card, "No Nevada DL or ID" must be printed in the registered owner's information area.
- Customers purchasing a vehicle(s) for a business that does not have an FEIN (Federal Employer Identification Number), enter "No FEIN."
- Do not enter or use the customer's social security number.

20. **Physical Address**: Record the registered owner's physical address information. NRS 482.215 requires DMV to obtain the customer's physical address. If the customer is homeless, he/she may use the address of a shelter as a physical address.

Note:

- If the vehicle is leased, identify the address as "Lessee" or "Lessor."
- If there is more than one Lessee, separate the Lessees with a semi-colon ";".

21. **Mailing Address**: Record the registered owner's mailing address information. When the customer's mailing address is the same as the physical address, enter "Same." If the customer is homeless, he/she may use U.S.P.S. General Delivery as a mailing address. This is the address the purchaser's registration renewals will be mailed to. NRS 482.245 requires DMV to obtain the customer's address. NRS 482.280 requires DMV to mail the registration renewal notices before the registration expires.

Note:

- If the vehicle is leased, identify the address as "Lessee" or "Lessor."
- If there is more than one Lessee, separate the Lessees with a semi-colon ";".

22. **Lienholder/Lessor Name**: Include the name of the lienholder or lessor. This is the legal owner of the vehicle. NRS 482.245 requires the lienholder or lessor name be placed on the title.

Note:

- Write "NONE" if there is no lien against the vehicle.
- Indicate the legal owner's title by writing "Lienholder" or "Lessor" after the legal owner's name.

23. **Nevada Driver's License, Identification Card Number, or FEIN for businesses**: Enter the number from the document presented during the purchase transaction. Per NRS 481.0515, the customer's full legal name must be placed on the vehicle registration and title. The DMV will use these numbers

to ensure the full legal names of the owners are placed on the registration and title.

Note:

- When the lienholder or lessor is a business, enter the FEIN.
- When the lienholder or lessor is an individual enter the Nevada DL or ID number.
- If the lienholder or lessor is a business and does not have a FEIN, enter "No FEIN."
- If the lienholder or lessor is an individual and does not have a Nevada DL or ID, enter "No NV DL or ID."

24. **Address**: Record the legal owner's mailing address information. NRS 482.245 requires DMV to obtain the customer's address. This is the address to which the title will be mailed.

25. **Seller's Business Name**: Enter the complete licensee's name as it appears on the Nevada DMV business license. NRS 482.423, 482.4235, 482.434, and 482.4345 require the name and address of the seller.

26. **DMV Business License Number**: Per NRS 482.423, 482.4235, 482.434 and 482.4345, enter the licensee's DMV business license number as it appears on the business license issued by the Department.

27. **Mailing Address**: Enter the licensee's mailing address information in accordance with NRS 482.423, 482.4235, 482.434, and 482.4345.

28. **Authorized Representative Printed Name**: In accordance with NRS 482.423, 482.4235, 482.434, and 482.4345, enter the name of the authorized representative of the business.

29. **Authorized Representative Signature**: The authorized representative must sign the DRS based on the requirements found in NRS 482.423, 482.4235, 482.434, and 482.4345.

The DRS must be properly and legibly completed. Incomplete, incorrect, or unclear information will result in the return of documents and delays for all parties involved.

Information on the DRS must match the information on the Manufacturer's Certificate of Origin or the applicable Certificate of Title.

Title fees must be submitted with the DRS.

DMV
Nevada Department of Motor Vehicles

CARSON CITY, NV 89711
Reno/Sparks/Carson City (775) 684-4DMV (4368)
Las Vegas Area (702) 486-4DMV (4368)
Rural Nevada (877) 368-7828
www.dmvnv.com

DEALER, REBUILDER, OR LESSOR'S REPORT OF SALE OR LEASE

This form must be completed in full

Please Print or Type in blue or black ink Control # XXXXXXXX

Vehicle Identification Number

1																

Year 2 Body Type 2 Model 2 Make 2

Fuel 3 MSRP 4 Unladen Weight 5 Axles 2

Cylinders/Rotors 2 Gross Weight 6 Length 7 County Based In 8

Date of Transaction 9 Placard Number 10

Full Sale Price 11 Placard Expiration Date 12

13 Sales Tax Collected ☐ Yes ☐ No This transaction is a ☐ Sale ☐ Lease Rebuilt Vehicle? ☐ Yes ☐ No

13a ***TAX/EXEMPT/GOV'T FLEET SALE*** 14 15

(Write in if applicable)

Odometer Reading (as shown on apparatus) 16 **NO TENTHS**

16
- ☐ 1. Actual Miles
- ☐ 2. The mileage stated is in excess of its mechanical limits.
- ☐ 3. The odometer reading is not the actual mileage. **WARNING – ODOMETER DISCREPANCY**
- ☐ 4. Exempt – Model year over 9 years old.

Sold to: 18 ☐ and ☐ or

Full Legal Name 17
First Middle Last

Nevada Driver's License, Identification Card Number, or FEIN for businesses 19

Full Legal Name 17
First Middle Last

Nevada Driver's License, Identification Card Number, or FEIN for businesses 19

Physical Address 20
Address City State Zip Code

Mailing Address 21
Address City State Zip Code

Lienholder/Lessor Name 22

Nevada Driver's License, Identification Card Number, or FEIN for businesses 23

Address 24
Address City State Zip Code

Seller's Business Name 25

DMV Business License Number 26

Mailing Address 27
Address City State Zip Code

Authorized Representative Printed Name 28

Authorized Representative Signature 29

NRS Chapter 482 requires the selling dealer to submit this copy to the DMV, at the address above.

RD101 (Rev. 9/2006)

LEASE TERMINATIONS

Lease Assumption means a complete change of registered owner (lessee). The original lessee has turned the vehicle back to the lessor/dealer and it has been leased to another person. The transaction is handled as a new sale or lease.

Lease Buyout (Termination) means a person or business leasing a vehicle that terminates the lease by purchasing the vehicle. This constitutes a sale and is processed as a new transaction.

A Dealer's Report of Sale (DRS) must be completed when a lease is terminated as a result of purchase of a vehicle. If the owner information remains the same as it was during the lease period, the dealer shall:

- Print "Lease Termination" across the top of the DRS
- Attach the completed and properly released Certificate of Title and the $28.25 title fee
- Submit all three copies of the DRS and the supporting documentation to the Department
- Mark the appropriate box to indicate Sales Tax Collected by Nevada dealers are required to collect sales tax on all retail sales in Nevada, including lease terminations, lease assumption, and lease buy-outs.

The Department's Carson City office will issue a new registration for the vehicle removing the lease information, and mail it to the registered owner. Include $5 for the new certificate of registration.

If there are changes in the registered owner information, but there is not a complete transfer of ownership or lease assumption, the dealer shall:

- Print "Lease Termination—Correction" across the top of the DRS; and
- Give the green copy of the DRS that shows the modified information to the customer.
- Mark the appropriate box to indicate Sales Tax Collected by Nevada dealers are required to collect sales tax on all retail sales in Nevada, including lease terminations, lease assumption, and lease buy-outs.

The customer will pay the title fee at the time the new registration is issued. The customer retains the original set of license plates.

In all cases, if the vehicle will not be registered, $20 title fee and $8.25 title processing fee must be submitted with the title documents when they are sent to the Department's Carson City office.

Note: Please see Section II for Odometer Disclosure Information pertaining to leased vehicles.

LEASE ASSUMPTIONS

A lease assumption is a complete change in the registered owner (lessee). The seller or leasing company handles the transaction as a new sale or lease.

A new Dealer's Report of Sale (DRS) must be issued and submitted with the required documents and title if a licensed Nevada dealer completes the transaction. Mark the appropriate box to indicate Sales Tax Collected. Nevada dealers are required to collect sales tax on all retail sales in Nevada, including lease terminations, lease assumptions, and lease buy-outs.

The purchase price area of the DRS must indicate, "lease assumption."

The dealer must provide the green copy of the DRS to the customer.

The white permit copy of the DRS and original title documents must be submitted by the dealer to the Department's Carson City office.

The $20.00 title and $8.25 title processing fees must be submitted with the title documents when they are sent to the Department's Carson City office.

SELLING GOVERNMENTAL AGENCY VEHICLES

NRS 372.040, 372.055, and 372.325

Dealer licensed to auction:
One or more of your auctioneers may be hired or contracted to assist a governmental agency with the sale or liquidation of one or more of their vehicles.

If the fee is a flat fee that is not a commission, fee, or other form of compensation derived or associated with the sale of each vehicle or group of vehicles; **DO NOT**:

- Sign onto the title
- Issue a temporary placard
- Issue a DRS
- Provide a passing emission test

IMPORTANT: Nevada sales tax exemptions apply to Nevada Government and U.S. Government vehicles only. Government vehicles (state owned) from other states that are brought into Nevada for retail sale, when sold by a licensed dealer or licensed dealer auction, are subject to the collection of sales tax.

Note: Sales tax exemptions only apply to the first sale of U.S. Government owned vehicles being sold, no matter where they are sold or purchased.

Government vehicles (owned by another state) that are purchased in another state and not registered in that state, then brought to Nevada to be registered, are subject to Nevada state sales tax.

Dealer licensed to auction:
One or more of your auctioneers are hired or contracted to assist a governmental agency with the sale or liquidation of one or more of their vehicles.

If the fee is a commission, fee, or other form of compensation derived or associated with the sale of each vehicle or group of vehicles; or the fee is for the sale of each vehicle from each buyer, YOU MUST:

- Issue a temporary placard NRS 482.423 & 482.424
- Issue a Dealer Report of Sale NRS 482.424
- Provide a passing emission test NRS 445B.800

On the first public sale of governmental vehicles you still DO NOT sign on to the title unless you are taking "ownership" of the vehicle prior to selling it to the public or another dealer. See Section II page #10 and #14 for instructions on how to complete and process the vehicle title.

Important: Pursuant to NAC 445B.575: If a vehicle is required by state or federal law to be equipped with an emission device and that device is missing or inoperable, the vehicle cannot be displayed or offered for sale to the public.

However, it may be sold to a Nevada licensed vehicle dealer or auto wrecker. The purchasing dealer should be provided with a written disclosure from the selling dealer advising the purchasing dealer the vehicle is missing the required emission device or that the device is inoperable.

The vehicle may be sold to a Nevada licensed auto wrecker without that disclosure.

BILL OF SALE
(FORM VP-104)

A Bill of Sale releases interest in a vehicle, and must be accompanied by a Certificate of Title or other ownership documents.

A Bill of Sale does not replace a Certificate of Title.

All areas of the Bill of Sale must be completed in full, and either typed or printed in ink. They must correspond to the title or other ownership documentation.

1. The purchase price must be written out in full (i.e., one hundred dollars).
2. The purchase price must also be identified numerically (i.e., $100.00).
3. Full Legal Name of Buyer(s) should be completed exactly as it appears on the customer's driver's license, identification card, or business license.
4. Nevada Driver's License, Identification Card Number, or FEIN for businesses: Enter the number based on the document presented during the purchase transaction.
   - If the customer does not have a Nevada driver's license or identification card, "No Nevada DL or ID" must be printed in the registered owner's information area.
   - Customers purchasing a vehicle(s) for a business that does not have an FEIN (Federal Employer Identification Number), enter "No FEIN."
   - Do not enter or use the customer's social security number.
5. Indicate "AND" or "OR" between names if there is more than one owner. Using "and" will require all persons on the title to sign the title to release interest in the vehicle. "OR" will allow for one person to sign the title of the two or more recorded, releasing interest in the vehicle.
6. The Bill of Sale must include the address of the buyer.
7. Buyer's Signature must be present.
8. The Date the Buyer signed the Bill of Sale form.
9. The Bill of Sale must include a complete description of the vehicle, including the year, make, model and vehicle identification number (VIN).
10. If no liens exist, write "NONE." If a lien exists, record the name of the lienholder.
11. Enter the mailing address for the lienholder.
12. The Bill of Sale must include the name, address and signature of the seller.
13. The Seller's Signature must be included.
14. The Date of Seller's signed the Bill of Sale form.

Note: Any alteration or erasure on the Bill of Sale requires additional verification.

DMV
Nevada Department of Motor Vehicles

555 WRIGHT WAY
CARSON CITY, NV 89711
Reno/Sparks/Carson City (775) 684-4DMV (4368)
Las Vegas Area (702) 486-4DMV (4368)
Rural Nevada or Out of State (877) 368-7828
www.dmvnv.com

BILL OF SALE

A Bill of Sale releases interest in a vehicle. A Certificate of Title or other ownership documents must accompany this form.

INSTRUCTIONS

- All areas must be completed in full.
- Complete the buyer area exactly as the new Certificate of Title will be printed.
- If no liens exist write the word "NONE".
- Any alterations or erasures will require additional documentation or verification.

Please print or type
Know all men by these presents

That in consideration of _1_____ Dollars ($_2_____)
and other value consideration, the receipt whereof is hereby acknowledged, the undersigned (seller) does hereby sell, transfer and deliver unto:

Full Legal Name of Buyer(s) _3_____ 5 ☐ and ☐ or
First Middle Last

Nevada Driver's License, Identification Card Number, or FEIN for businesses _4_____

Full Legal Name of Buyer(s) _3_____
First Middle Last

Nevada Driver's License, Identification Card Number, or FEIN for businesses _4_____

Address _6_____
Street City State Zip Code

Buyer's Signature _7_____ Date _8_____
his right, title and interest in and to the following described vehicle:

Year _9_____ Make _9_____ Model _9_____

Vehicle Identification Number

9 | | | | | | | | | | | | | | | | | | |

Buyer certifies Lien in favor of_10_____
Name of business or individual holding lien

Lienholder Address 11_____
Street City State Zip Code

Seller certifies that he is the lawful owner of said vehicle; that he has the right to sell the aforesaid; and that he will warrant and defend the title of same against the claims and demands of all persons whomever except lienholder noted above.

Seller's Printed Full Legal Name _12_____
First Middle Last

Seller's Address _12_____
Street City State Zip Code

Seller's Signature_13_____ Date _14_____

RD104 (Rev. 8-2006)

DEALER REASSIGNMENT OF TITLE

Dealer Reassignment of Title (Form VP-190) is a form provided by the Department pursuant to NRS 482.400 for use by a dealer for the transfer of ownership of a vehicle.

If a Certificate of Title is not available at the time of transfer of ownership, and it is not in the possession of a lienholder and it has not been lost or stolen, a dealer may use a Dealer Reassignment of Title form to transfer ownership of a vehicle.

The Dealer Reassignment of Title may also be used if the spaces on the reverse side of the Certificate of Title have been filled in or struck through.

The first assignment area on the Certificate of Title must always be completed.

If a dealer uses a Dealer Reassignment of Title form to transfer the ownership of a vehicle, the dealer shall, before submitting documentation concerning the transaction to the Department:

- Write the control number of the Dealer Reassignment of Title form in the upper right corner of the reverse side of the Certificate of Title for the vehicle;
- Attach the Dealer Reassignment of Title form to the Certificate of Title; and
- Strike through any spaces on the reverse side of the Certificate of Title that remains unfilled.

If a reassignment of title form is used, and the buyer is not a dealer, the buyer must be provided with an opportunity to examine:

- The Certificate of Title or a photocopy of the Certificate of Title; and
- Any power of attorney for the purpose of mileage disclosure that was given to the dealer in connection with his acquisition of the vehicle.

State of Nevada
Department of Motor Vehicles
Dealer Reassignment of Title for a Motor Vehicle

Vehicle Identification Number	Year/Model	Make Of Vehicle	Body Style	Certificate Of Title Number

FEDERAL AND STATE LAW REQUIRES THAT YOU STATE THE MILEAGE IN CONNECTION WITH THE TRANSFER OF OWNERSHIP. FAILURE TO COMPLETE OR PROVIDING A FALSE STATEMENT MAY RESULT IN FINES AND/OR IMPRISONMENT.

REASSIGNMENT DEALER ONLY
Dealer's License Number: _____

The undersigned hereby certifies that the vehicle described in this title has been transferred to the following buyer(s):

Printed Full Legal Name of Buyer(s) ☐ AND ☐ OR

Printed Full Legal Name of Buyer(s)

Address
Street City State Zip Code

I certify to the best of my knowledge that the odometer reading is the actual mileage of the vehicle unless one of the following statements is checked:

▶ ODOMETER READING NO TENTHS

- ☐ The mileage stated is in excess of its mechanical limits.
- ☐ The odometer reading is not the actual mileage. WARNING – ODOMETER DISCREPANCY
- ☐ Exempt – Model year over 9 yrs. old.

Date of Sale

Signature of Seller(s) Printed Name of Seller(s)

I am aware of the above odometer certification made by the seller/agent.

Seller's Address City State Zip Code

Signature of Buyer(s) Printed Full Legal Name of buyer(s)

REASSIGNMENT DEALER ONLY
Dealer's License Number: _____

The undersigned hereby certifies that the vehicle described in this title has been transferred to the following buyer(s):

Printed Full Legal Name of Buyer(s) ☐ AND ☐ OR

Printed Full Legal Name of Buyer(s)

Address
Street City State Zip Code

I certify to the best of my knowledge that the odometer reading is the actual mileage of the vehicle unless one of the following statements is checked:

▶ ODOMETER READING NO TENTHS

- ☐ The mileage stated is in excess of its mechanical limits.
- ☐ The odometer reading is not the actual mileage. WARNING – ODOMETER DISCREPANCY
- ☐ Exempt – Model year over 9 yrs. old.

Date of Sale

Signature of Seller(s) Printed Name of Seller(s)

I am aware of the above odometer certification made by the seller/agent.

Seller's Address City State Zip Code

Signature of Buyer(s) Printed Full Legal Name of buyer(s)

REASSIGNMENT DEALER ONLY
Dealer's License Number: _____

The undersigned hereby certifies that the vehicle described in this title has been transferred to the following buyer(s):

Printed Full Legal Name of Buyer(s) ☐ AND ☐ OR

Printed Full Legal Name of Buyer(s)

Address
Street City State Zip Code

I certify to the best of my knowledge that the odometer reading is the actual mileage of the vehicle unless one of the following statements is checked:

▶ ODOMETER READING NO TENTHS

- ☐ The mileage stated is in excess of its mechanical limits.
- ☐ The odometer reading is not the actual mileage. WARNING – ODOMETER DISCREPANCY
- ☐ Exempt – Model year over 9 yrs. old.

Date of Sale

Signature of Seller(s) Printed Name of Seller(s)

I am aware of the above odometer certification made by the seller/agent.

Seller's Address City State Zip Code

Signature of Buyer(s) Printed Full Legal Name of buyer(s)

LIEN

LIENHOLDER TO BE RECORDED AND SHOWN ON NEW TITLE.

Printed Name of Lienholder

Address
Street City State Zip Code

NOTE: This reassignment is not valid unless attached to original certificate of title.
Unauthorized printing or reproduction of this document is prohibited.

This document is void if altered in any way.

391000 C 391000 C

RD190 (Rev. 5/05)

LIEN RELEASE/SATISFACTION OF LIEN

Lien Release means a written release from a person, business or financial institution on record as having a security interest in a vehicle. The lien release must include a complete vehicle description.

A lien release or satisfaction of lien enables a lienholder to release the security interest in a vehicle. It may be used with the Certificate of Title or with an application for a duplicate Certificate of Title.

The lien release must include:

1. A complete description of the vehicle, including the vehicle identification number, year, make, and model

2. The registered owner's full legal name and address

3. The name, address and phone number of the lienholder

4. The printed name of the lienholder representative and their title if the lienholder is a business, the name of the business

5. The signature of an authorized representative of the business

6. The date it was signed by the lienholder

7. Signature must be witnessed by a Notary Public or authorized Nevada DMV representative. A licensed motor vehicle dealer in Nevada is not required to have his signature notarized.

Note: A *Lien Release* (Form VP-186) is available from the Department. However, other forms will be accepted provided they contain the information specified above.

555 WRIGHT WAY
CARSON CITY, NV 89711
Reno/Sparks/Carson City (775) 684-4DMV (4368)
Las Vegas Area (775) 486-4DMV (4368)
Rural Nevada or Out of State (887) 368-7828
www.dmvnv.com

LIEN RELEASE

Please print or type

This is to certify the lien against the described vehicle has been fully satisfied.

Vehicle Identification Number 1

Year 1 Make 1 Model 1

Registered Owner(s) 2
First Middle Last

Address 2
Street City State Zip Code

Printed Name of Lienholder 3

Address 3
Street City State Zip Code

Daytime Telephone Number (____) 3 - _____

Lienholder Representative's Name 4
First Middle Last

Lienholder Representative's Title 4

Lienholder Representative's Signature 5 Date 6

Subscribed and sworn before me this 7 day of 7 20 7

7
Notary Public or Authorized Nevada DMV Representative

RD186 (Rev. 11/03)

ERASURE AFFIDAVIT
(FORM VP-19)

An *Erasure Affidavit* (Form VP-19) must be completed whenever an error has been made on Certificate of Title documents. The affidavit provides for the removal of incorrect information.

The Erasure Affidavit must be completed by the person whose name is being removed from the document. Any other changes of information require the signature of the person taking responsibility for the error.

If a dealer completes the Erasure Affidavit, the name of the dealer and the signature of the authorized representative must be included.

When correcting information, draw a single line through the error and write the corrected information above. Do not obliterate the information. If the correct information cannot be placed in the appropriate area on the Certificate of Title, Manufacturer's Certificate of Origin or Salvage Title, it may be placed on the Erasure Affidavit.

INSTRUCTIONS FOR COMPLETING THE ERASURE AFFIDAVIT

1. State and county where the form was completed.

2. The complete description of the vehicle, including the year, make, model and identification number of the vehicle. The description of the vehicle must match all corresponding documents.

3. A complete description of the reason for the change or removal of information on the title documents.

4. The full legal name, address and signature of the person whose name is being removed from the document. Any other change of information requires the signature of the person taking responsibility for the error or removal of information from the document.

   The business name and the name of the representative must also appear if the person is representing a business, (i.e., ABC Auto Sales, *by Sam Jones*).

5. An Erasure Affidavit must be signed in the presence of a Notary Public or authorized Nevada Department of Motor Vehicles representative. If witnessed by a Notary Public, the stamp and signature of the notary public must appear on the affidavit. If witnessed by an authorized Department representative, the name and validation stamp or employee identification number, as applicable, must appear on the affidavit. A licensed motor vehicle dealer in Nevada is not required to have his signature notarized.

555 WRIGHT WAY
CARSON CITY, NV 89711
Reno/Sparks/Carson City (775) 684-4DMV (4368)
Las Vegas Area (702) 486-4DMV (4368)
Rural Nevada (877) 368-7828
www.dmvnv.com

ERASURE AFFIDAVIT

An individual taking full responsibility for an error, change, or removal of information on ownership documents must complete and sign the Erasure Affidavit. If a person is being removed from the ownership documents, that individual is required to sign the affidavit. When representing a business, the business name and the name of the authorized business representative must appear on the affidavit.

Please print or type

State of Nevada
County of 1 } ss.

Year 2 Make 2 Model 2

Vehicle Identification Number 2

The undersigned, being duly sworn, states that the error or change appearing on the attached ownership documents for the described vehicle was made due to: **(PLEASE STATE AREA CHANGE WAS MADE IN)**

3

This information should not be part of the vehicle record.

Affiant's Full Legal Name 4
Last First MI

Address 4
Street City State Zip Code

Affiant's Legal Signature 4

Subscribed and Sworn before me this 5 day of 5 20 5

5
Notary Public or Authorized Nevada DMV Representative

RD19 (Rev. 10/2003)

AFFIDAVIT FOR TRANSFER OF TITLE FOR ESTATES UNDER $20,000
(FORM VP-24)

Pursuant to Nevada Revised Statutes (NRS) 146.080, estates not exceeding $20,000 may transfer assets of an estate (including vehicles) without issuance of letters of administration or probate of a will when an affidavit is provided that shows the rights of the affiant or affiants to receive money or property or to have evidence transferred.

A forty-day waiting period (following the death of the decedent) is required before the application for the transfer of ownership will be processed.

The decedent must be a Nevada resident, and the vehicle must have been titled in Nevada.

If the decedent was an out-of-state resident and had an out-of-state title for the vehicle, application for transfer of the vehicle must be made in the state of residence.

The decedent's spouse, children, parent, brother or sister or guardian of the estate of any minor or incompetent person must complete the affidavit.

A certified copy of the death certificate must accompany the affidavit and outstanding current Certificate of Title.

If the Certificate of Title is not available, the affiant may apply for a duplicate Nevada Certificate of Title in the name of the estate.

All documents must be signed by the affiant, and as the decedent's name appears on the Certificate of Title, i.e., John Jones by *Mary Jones*.

INSTRUCTIONS FOR COMPLETING THE AFFIDAVIT FOR TRANSFER OF TITLE FOR ESTATES (FORM VP-24)

1. The full legal name of the person completing and signing the form.

2. The day, month and year the owner of record died.

3. The name of the deceased owner of record.

4. The relationship of the person completing the form to the deceased (spouse, son, daughter, etc.).

5. The vehicle identification number and description of the vehicle (year, make and model).

6. The reason the affiant is authorized to complete the affidavit (i.e., closest surviving relative).

7. The signature of the affiant.

8. The date the affiant signed the affidavit.

9. The complete address of the affiant.

10. An Affidavit for Transfer of Title for Estates (Form VP-24) must be signed in the presence of a Notary Public or authorized Nevada Department of Motor Vehicles representative. If witnessed by a Notary Public, the stamp and signature of the notary public must appear on the affidavit. If witnessed by an authorized Department representative, the name and validation stamp or employee identification number, as applicable, must appear on the affidavit.

11. The signature of the authorized representative or Notary Public. A licensed motor vehicle dealer in Nevada is not required to have his signature notarized.

555 WRIGHT WAY
CARSON CITY, NV 89711
Reno/Sparks/Carson City (775) 684-4DMV (4368)
Las Vegas Area (702) 486-4DMV (4368)
Rural Nevada or Out of State (877) 368-7828
www.dmvnv.com

AFFIDAVIT FOR TRANSFER OF TITLE FOR ESTATES UNDER $20,000

Pursuant to NRS 146.080, estates not exceeding $20,000 may transfer assets of an estate without issuance of letters of administration or probate of a will when an affidavit is provided, showing rights of the affiant or affiants to receive money or property or to have evidence transferred.

Please print or type

Before the undersigned came 1
Name of Affiant

Who, after being sworn, states and deposes as follows:

That on the 2 day of 2 20 2 3
Name of Deceased

A resident of the State of Nevada, died, leaving no real property or interest therein, nor lien thereon, situated in the State of Nevada;

- That the total value of the decedent's property, situated in the State of Nevada, does not exceed Twenty Thousand Dollars ($20,000), excluding amounts due decedent for services in the armed forces, and that the property does not include any real property nor interest therein or lien thereon;
- That no application or petition for the appointment of a personal representative is pending or has been granted in any jurisdiction;
- That all debts of decedent, including funeral and burial expenses, have been paid or provided for;
- That the Affiant has given written notice by personal service or by certified mail, identifying his claim and describing the property claimed, to every person whose right to succeed to the decedent's property is equal or superior to that of the Affiant and that at least 14 days have elapsed since the notice was served or mailed; and
- That the Affiant is personally entitled to full payment or delivery of the property claimed or is entitled to payment or delivery on behalf of and with written authority of all other successors who have an interest in the property.

Affiant states that his relationship to the above named decedent is that of 4

Affiant further states that he is entitled by law to succeed to the title in the decedent's vehicle, as described:

Year 5 Make 5 Model 5

Vehicle Identification Number

5 | | | | | | | | | | | | | | | | | |

Transferred to the Affiant for the reason that Affiant is 6

Affiant finally states that more than forty days have passed since the death of the decedent as evidenced by a certified copy of the death certificate attached hereto. Affiant acknowledges that he understands that filing a false affidavit constitutes a felony in this state.

Affiants Signature 7 Date 8

Address 9
Street City State Zip Code

Subscribed and sworn to before me this 10 day of 10 20 10

11
Notary Public or Authorized Nevada DMV Representative

RD24 (Rev. 10/03)

ONE AND THE SAME AFFIDAVIT
(FORM VP-185)

The One and the Same Affidavit (Form VP-185) is used when an individual is known by more than one name, either the first name or the last name.

The One and the Same Affidavit must be completed in full, and must indicate the county where the form is completed.

The One and the Same Affidavit must be witnessed by a Notary Public or an authorized Nevada DMV representative.

REPOSSESSION AFFIDAVIT
(FORM VP-20)

A lienholder, as recorded on a Certificate of Title, may take possession of a vehicle that is in default of the terms of the applicable security agreement. To take such possession, the lienholder must submit the documents and follow the procedures required by Nevada Revised Statutes 482.516 through 482.518 to the Department.

Any person repossessing a vehicle without the knowledge of the registered owner must report the repossession orally to the police or sheriff's office in the county where the repossession is made.

A lienholder must give written notice to the person named as liable on the security agreement of the intent to sell a repossessed vehicle. The written notice must be provided at least 10 days prior to the sale, and must be provided in person or sent by mail to the address as shown on the security agreement. The notice must:

- Inform the person of their right to redeem the vehicle and the total amount required to do so as of the date of the notice
- Inform the person of their privilege of reinstatement of the security agreement, if the lienholder extends such a privilege
- Give notice of the lienholder's intent to resell the vehicle at the expiration of 10 days from the date of the notice
- Disclose the location where the vehicle will be returned to the buyer upon redemption or reinstatement
- Designate the name and address of the person to whom payment must be made

During the period provided under the notice, the person liable on the security agreement may pay the debt in full.

The lienholder must sell the vehicle in a commercially reasonable manner. The proceeds of the sale must be applied in the following order:

- To cover the reasonable expenses of retaking, holding, preparing for sale, selling, and to the extent provided for in the security agreement, reasonable attorney's fees and legal expenses incurred by the secured party
- To satisfy the indebtedness secured by the security interest under which the disposition is made

- To satisfy the indebtedness secured by any subordinate security interest in the collateral if written notification of demand is received before distribution of the proceeds is completed. If requested by the secured party, the holder of a subordinate security interest must furnish reasonable proof of his interest, and unless he does so, the secured party need not comply with his demand

- The payment of any surplus to the debtor

To obtain the Certificate of Title in the lienholder's name for a vehicle that has been repossessed, attach the Repossession Affidavit (Form VP-20) to the outstanding title. The title must be released by the lienholder as shown on the face of the title.

If a vehicle has been resold, usual procedures for transfer of ownership must be followed. The Repossession Affidavit must be submitted with the transfer of ownership documents.

INSTRUCTIONS FOR COMPLETING THE REPOSSESSION AFFIDAVIT
(FORM VP-20)

1. Enter the name of the lienholder as shown on the Certificate of Title.

2. Enter the name of the registered owner of the vehicle exactly as shown on the Certificate of Title.

3. Enter the complete description of the vehicle, including the year, make, model and vehicle identification number.

4. If the person repossessing the vehicle is:
   - An individual, select Nevada Driver's License or Identification Card
   - Licensed Nevada DMV Business, select DMV License Number
   - Business other than a Licensed Nevada DMV Business, select FEIN

5. Write the document number of item selected in 4.

6. Write the address of the person repossessing the vehicle.

7. Enter the printed full legal name of the person repossessing the vehicle.

8. Enter the signature of the individual authorized by the business to repossess the vehicle. The name of the business must be included.

9. Enter the date the affidavit was completed.

10. Enter the signature of the Notary Public or authorized Nevada Department of Motor Vehicles representative who witnessed the signature of the person repossessing the vehicle, and the date the signature was witnessed.

    Note: If the person who repossesses the vehicle is a licensed motor vehicle dealer in Nevada, notary verification is not required.

DMV
Nevada Department of Motor Vehicles

555 Wright Way
Carson City, NV 89711
Reno/Sparks/Carson City (775) 684-4DMV (4368)
Las Vegas area (702) 486-4DMV (4368)
Rural Nevada or Out of State (877) 368-7828
www.dmvnv.com

REPOSSESSION AFFIDAVIT

Please print or type

I, 1 _____ being first sworn deposes and says I am the legal
Lienholder as shown on the Nevada Certificate of Title
Owner and a Lienholder of the vehicle described below and in the name of

Registered Owner 2 _____

Registered Owner 2 _____

Described as follows:

Vehicle Identification Number

3 [ ][ ][ ][ ][ ][ ][ ][ ][ ][ ][ ][ ][ ][ ][ ][ ][ ][ ]

Year _____ Make _____ Model _____

I certify that all provisions of Nevada Revised Statutes 482.516 through 482.518 have been complied with, and make this affidavit for the purpose of satisfying the Nevada Department of Motor Vehicles. I also hereby release, discharge and agree to hold harmless the Nevada Department of Motor Vehicles of and from any and all liability to anyone whomsoever which may arise by reason of any contest of the validity of the repossession herein referred to, or the validity of the repossession of the vehicle under provisions of the conditional contract in the manner prescribed in Nevada Revised Statutes.

4 ☐ Nevada Driver's License ☐ Identification Card ☐ DMV License Number ☐ FEIN for business

Document Number 5 _____

Address 6 _____
Address City State Zip Code

Printed Full Legal Name of Business or Individual(s) 7 _____

Authorized Signature 8 _____ Date 9 _____

Subscribed and sworn to before me this 10 day of 10 20 10

10 _____
Notary Public or Authorized Nevada DMV Representative

RD-020 (Rev. 6/2006)

TRUSTS
NRS 163

Trust documents are not required to be presented to the Department of Motor Vehicles for transfer of ownership in the name of a trust.

In lieu of presenting trust documents to the Department of Motor Vehicles for transfer of ownership in the name of a trust, or to release interest in a vehicle titled to a trust, the Trustee must complete a *Trustee Appointment & Powers Affidavit* (Form VP-188).

TRUSTEE APPOINTMENT & POWERS AFFIDAVIT
INSTRUCTIONS FOR COMPLETING FORM VP-188

1. Enter the printed full legal name of the trustee.

2. Enter the full legal name of the trust as it appears on the notarized trust documents (verification will not be requested). Only the first 34 characters of the trust name will appear on the title and/or registration. If pertinent parts of the name will not print, have the customer abbreviate the name. Explain to the customer that their insurance company must report the name exactly the same to avoid a possible sanction.

3. Enter the complete vehicle description, including the year, make, model and vehicle identification number.

4. Enter the printed full legal name and complete address of the person shown on the affidavit as trustee.

5. Enter the signature of the trustee completing the affidavit and the date the affidavit was completed.

6. Witness of signature by a Notary Public or authorized Department of Motor Vehicles representative. A licensed motor vehicle dealer in Nevada is not required to have his signature notarized.

DMV
Nevada Department of Motor Vehicles

555 WRIGHT WAY
CARSON CITY, NV 89711
Reno/Sparks/Carson City (775) 684-4DMV (4368)
Las Vegas Area (702) 486-4DMV (4368)
Rural Nevada (877) 368-7828
www.dmvnv.com

TRUSTEE APPOINTMENT AND POWERS AFFIDAVIT

The trustee named below is responsible for informing their insurance company the vehicle has been transferred into the name of a trust. The trustee has the following options:

1) Add the name of the insured trustee to the registration and title certificates; or
2) Request the insurance company report the vehicle in the name of the trust.

When the Department receives the report of insurance policy information the name in which the vehicle is insured and the name in which the vehicle is registered must match. When it does not match exactly, the vehicle will be out of compliance for insurance coverage and the registered owner may be subject to fines for failing to properly insure the vehicle.

The affiant completing this affidavit must be the same person that signs the certificate of title.

Please print or type

I 1 _____ declare that I have been appointed

as a Trustee of 2 _____
Name of Trust (f34 characters or less)

And have the power granted as a Trustee to sign for the transfer of the below described vehicle:

Year 3 _____ Make 3 _____ Model 3 _____

Vehicle Identification Number 3 _____

I hereby swear (or affirm) under penalty of NRS 482.545, the assertions are true of my own personal knowledge.

Affiant's Printed Name 4 _____

Address 4 _____
City State Zip Code

Affiant's Signature 5 _____ Date 5 _____

Subscribed and sworn to before me this 6 _____ day of 6 _____ 20 6 _____

6 _____
Notary Public or Authorized Nevada DMV Representative

RD-188 (Rev. 6/2007)

POWER OF ATTORNEY
(FORM VP-136)

A Power of Attorney is a written legal document whereby one individual conveys to another the legal right to act on his or her behalf.

If the right to release interest in a vehicle has been conveyed to another person or firm by Power of Attorney, the original Power of Attorney must accompany the title documents, and it must contain a complete description of the vehicle, including the vehicle identification number, year, make and model.

If a general Power of Attorney is used to convey an individual's legal rights, a photocopy attached to the title documents is acceptable.

A Power of Attorney becomes null and void upon the death of the individual who conveyed his or her rights to another.

The Power of Attorney must be exercised by the person or firm named as representative on the form. To properly exercise the Power of Attorney, the name of the owner must be listed prior to that of the representative.

- Example for an individual:

  Sharon Smith by *Jane Doe, P of A*

- Example for a business:

  Sharon Smith by Morrison's Garage *George Morrison, P of A*

The Power of Attorney must be exercised on the Certificate of Title or document for which the authority was granted. Otherwise, it is null and void.

The Power of Attorney must be witnessed by a Notary Public or authorized Nevada Department of Motor Vehicles employee or representative. A licensed Nevada dealer's signature is not required to be acknowledged by a Notary Public on documents the dealer must file with the Department, except in regard to deposit in lieu of bond. (NRS 482.3275)

When the Power of Attorney is used to release ownership of a vehicle, the Certificate of Title must be signed in the appropriate area by the individual appointed as Power of Attorney.

If a specific power of attorney is used to release ownership of a vehicle, a copy is acceptable only if it is a certified copy. The following statement must be included on the copy:

- "I hereby certify that this is a true and exact copy of the original that is being held in our files. I further certify the original will be available during normal business hours for review by Department of Motor Vehicles personnel if necessary."

If a power of attorney is given to a business, the certification statement must include the business stamp or the printed or typed name of the business, the signature of the individual authorized to act on behalf of the business and the printed or typed name of the person certifying the copy of the specific power of attorney.

A general or specific power of attorney cannot be used to disclose the odometer reading on vehicles nine years old or newer.

TRANSFER ON DEATH
(FORM VP-239)

Transfer on Death allows vehicle owners to add or remove a beneficiary to their title. A title fee, the title, and the application must be submitted to the Department Motor Vehicles to make this change. A new Nevada title will be issued with the beneficiary's name and the "Transfer on Death" designation.

Only one beneficiary can be on the title. A beneficiary cannot be added to the title when there is a lienholder or ownership is designated as "Tenants in Common." The beneficiary does not have interest or control of the vehicle. If a lienholder is added to the title at a later time, the beneficiary will be removed from the title.

To transfer the ownership to the beneficiary, the beneficiary must submit the title (if available), title fee, and certified death certificate of the vehicle's legal owner(s). If more than one owner is on the title, the beneficiary cannot become the vehicle owner until all owners are deceased.

SECTION IV

FOREIGN, CANADIAN AND GRAY MARKET VEHICLES

U.S. MILITARY REGISTRATION AND TITLES

FOREIGN AND GRAY MARKET VEHICLES

A foreign or gray market vehicle is a vehicle manufactured for sale in a country other than the United States that may not meet U.S. safety and/or environmental standards. These vehicles are not imported to the United States through the manufacturer's U.S. distribution system. Once in the United States, these vehicles must be brought into compliance, exported back out, or destroyed.

All of the following documents are required to register and title a gray market vehicle:

- The foreign Manufacturer's Certificate of Origin, Manufacturer's Statement of Origin or outstanding Certificate of Title:
    - A statement signed by the manufacturer indicating an MSO/MCO was never issued; or
    - A statement from the manufacturer indicating to whom they assigned their interest in the vehicle; and
    - Bills of sale to establish a complete chain of ownership
- A completed Vehicle Inspection Certificate (Form VP-15)
- U.S. Department of Transportation (Form HS-7)
- U.S. Environmental Protection Agency Form 3520-1
- Odometer Disclosure Statement for vehicles 9 years old or newer if not on the MSO/MCO or title
- Statement of Facts (Form VP-22) if there is no Manufacturer's Certificate/Statement of Origin or outstanding Certificate of Title
- Department of Homeland Security, U.S. Custom and Border Protection (CBP Form 7501).

The Nevada Certificate of Title will be branded "Non-US Vehicle" to provide notice to future owners that the vehicle was a foreign or gray market vehicle.

For more information, you may reference the National Automobile Dealers Association (N.A.D.A.) Title and Registration Text Book, PO Box 7800, Costa Mesa, CA 92628, phone number 800-966-6232.

MILES VERSUS KILOMETERS

To accurately reflect the true reading of the odometer apparatus, the documents (title, reassignment, etc.) should indicate whether the odometer records the distance traveled in miles or kilometers.

When the title is processed, the kilometers will be converted to miles. The kilometers are multiplied by 0.6214 then rounded to the nearest whole number; the result is used as the miles.

CANADIAN VEHICLES

A Canadian vehicle is a vehicle that has been previously registered or titled in Canada, or ownership for the vehicle has been filed in Canada.

Documents required to register and title a Canadian vehicle include:

- Current Canadian registration
- A completed Vehicle Inspection Certificate (Form VP-15)
- The results of the lien search from the province where the vehicle was last registered
- The original copy of the notarized lien release, if applicable
- An odometer disclosure if the vehicle is being transferred and it is nine years old or newer
- A notarized or witnessed Bill of Sale, if applicable
- A Statement of Facts (Form VP-22)

U.S. GOVERNMENT CONTACT INFORMATION

U.S. Department of Transportation

Federal safety standards are the responsibility of the United States Department of Transportation. Questions concerning safety requirements should be directed to:

Office of Vehicle Safety Compliance
National Highway Traffic Safety Administration
United States Department of Transportation
400 7th Street, SW,
Washington, DC 20590
1 (888) 327-4236
http://www.nhtsa.dot.gov

U.S. Environmental Protection Agency

Air quality emissions standards are the responsibility of the United States Environmental Protection Agency (EPA). Questions concerning emissions standards in Region 9 (AZ, CA, HI, NV) should be directed to:

U.S. Environmental Protection Agency
Office of Transportation and Air Quality
75 Hawthorne Street
San Francisco, CA 94105
1 (866) EPA-WEST (toll free in Region 9)
http://www.epa.gov/region09

When calling the EPA, please have available the make, model, year and vehicle identification number (VIN) for the vehicle. If the vehicle has already been imported, the port of entry, date of entry and entry number from EPA Form 3520-1 must be available. If corresponding with the EPA in writing, the same information must be provided, along with a telephone number where you can be reached during the day.

CANADIAN GOVERNMENT CONTACT INFORMATION

Alberta

Privatized businesses are located in several locations throughout Alberta. Contact directory assistance for the proper location.
http://www.gov.ab.ca/

British Columbia

Ministry of Transportation & Highways
Motor Vehicle Branch / ICBC
151 West Esplanade
North Vancouver, British Columbia V7M 3H9
Phone: (604) 661-2255
http://www.gov.bc.ca/

Manitoba

Highways and Government Services
Division of Driver & Vehicle Licensing, Vehicle Registrations
1075 Portage Avenue
Winnipeg, Manitoba R3G 0S1
http://www.gov.mb.ca/

New Brunswick

Department of Transportation
Motor Vehicle Branch
PO Box 6000
Fredericton, New Brunswick E3B 5H1
Phone: (506) 453-2410
http://www.gov.nb.ca/

Newfoundland/Labrador

Department of Government Services/MVD
PO box 8710
St. John's, Newfoundland A1B 4J5
Phone: (709) 729-2501
http://www.gov.nf.ca

Nova Scotia

Department of Business & Consumer Services
PO Box 2734
Halifax, Nova Scotia B2J 3P7
Phone: (902) 424-5851
http://www.gov.ns.ca/

Nunavut

Motor Vehicles Division
Government of Nanavut
PO Box 207
Gjoa Haven, Nunavut X0E 1J0
http://www.gov.nu.ca/

Ontario

Ministry of Transportation
Licensing Division
2680 Keele Street, East Bldg., Main Floor
Toronto, Ontario M3M 3E6
Phone: (416) 235-4686
http://www.gov.on.ca/

Prince Edward Island

Department of Transportation & Public Works
Highway Safety Operations
PO Box 2000
Charlottetown, Prince Edward Island
C1A 7N8
http://www.gov.pe.ca/

Quebec

Societe de l'assurance automobile du Quebec

To find a center of service please check on line for locations and hours of operation.
http://www.saaq.gouv.qc.ca/

Saskatchewan

Saskatchewan Government Insurance/MVD
2260 11th Avenue
Regina, Saskatchewan S4P 2N7
Phone: (306) 751-1200
http://www.gov.sk.ca/

Yukon Territory

Government of Yukon
Box 2703
Whitehorse, Yukon Y1A 2C6
Phone: (867) 667-5811
http://www.gov.yk.ca/

Northwest Territories:

For information, contact the Dept. of Transportation at http://www.gov.nt.ca/.

FOREIGN EMBASSY CONTACTS

At times, there may be a need for additional information, and because of problems with language differences, distance or time, it may be necessary to contact foreign embassies regarding registration and titling procedures. Information about foreign countries may be obtained from individual embassies, most of which are located in Washington, DC. Correspondence to embassies should be in the following format (no street address or zip code is necessary):

The Embassy of (Country Name)
Washington, DC

Individual embassy addresses may also be found at the following web site:

www.embassy.org or http://usembassy.state.gov

MILITARY CONTACTS

Inquiries concerning military registrations, identity of owners or identity of persons to whom plates have been issued must be directed in writing to:

Headquarters, USAREUR
7th Army
Registry of Motor Vehicles
Unit 29230
APO AE 09102

Headquarters
US Air Force, Europe
Public Affairs Office
Unit 3050, Box 120
APO AE 09094-0120

Headquarters
US Naval Forces, Europe
FPOAE 09499-0013

US MARFOREUR
Attn: Provost Marshal
Unit 30401
APO AE 09107-0401

U.S. MILITARY REGISTRATIONS AND TITLES

Military registrations DO NOT require shipping papers or DOT or EPA releases, unless the vehicles are gray market vehicles. All of the following documents are required to register and title a vehicle.

- AE Form 190-1AA is currently used by the military to register vehicles.
- Vehicle Inspection Certificate (Form VP-15).
- Notarized lien release if the lien has been satisfied or lienholder information when there is a lienholder.
- Statement of Facts (VP-22). Military registration is not proof of ownership.
- Department of Homeland Security, U.S. Custom and Boarder Protection (CBP Form 7501).

Transfer of ownership may be completed on the reverse side of the form or by an acceptable bill of sale. Odometer Disclosure Statement for vehicles 9 years old or newer if not on the title.

SECTION V

REGISTRATION INFORMATION

GENERAL REGISTRATION INFORMATION

The following information is provided so you can assist your customers with Nevada's vehicle registration requirements.

Registration requirements include Nevada liability insurance, a passing emission control certificate when the vehicle is registered in Clark and Washoe Counties, odometer disclosure statements when applicable and payment of sales tax or proof that sales tax in Nevada has been paid.

Nevada law requires registered owners to maintain Nevada insurance coverage on registered vehicles, from a licensed Nevada insurance carrier to avoid a $250 fine.

Note: An insurance company must be licensed through the State of Nevada, Department of Insurance and approved by the Department of Motor Vehicles to sell vehicle insurance policies in Nevada.

- Minimum insurance amount is:
    - $15,000 for bodily injury to or death of one person in any one accident;
    - Subject to the limit for one person, in the amount of $30,000 for bodily injury to or death of two or more persons in any one accident; and
    - $10,000 for injury to or destruction of property of others in any one accident.

VEHICLE REGISTRATION FEES

Nevada Revised Statutes 482.205 requires that every owner of a vehicle intended to be operated on any Nevada highway apply to the Department or a registered dealer to obtain a valid registration before the vehicle can be operated on Nevada highways.

All vehicles with a declared gross weight in excess of 26,000 pounds must be registered with the Motor Carrier Division. The Motor Carrier Division may prorate new vehicle registrations only for 100% Nevada based vehicles for the balance of the year (if the carrier can prove they did not run prior to registering).

Owners of fleet vehicles (10 or more vehicles) may be registered on a calendar year basis, with the registrations expiring on December 31.

REGISTRATION FEES

Registration fees established by NRS 482.480, 482.482 and 482.483 are as follows:

• Passenger Vehicles	$ 33.00
• Motorcycles (registration fee $33 and $6 for motorcycle education)	39.00
• Travel Trailer	27.00
• Golf Cart	10.00
• Trailer or Semitrailer (under 1,000 lbs)	12.00
• Trailer or Semitrailer (over 1001 lbs)	24.00
• Motortruck, truck trailer or bus	
o Less than 6,000 lbs	33.00 (flat rate)
o 6,000 to 8,499 lbs	38.00 (flat rate)
o 8,500 to 10,000 lbs	48.00 (flat rate)
o 10,001 to 26,000 lbs per thousand pounds or portion thereof	12.00
o 26,001 to 80,000 lbs per thousand pounds or portion thereof	17.00

GOVERNMENTAL SERVICES TAXES

Governmental Services Taxes, as required by NRS 371.050, are also due and payable at the time of a vehicle registration. These taxes are based on 35 percent of the Manufacturer's Suggested Retail Price (MSRP) of the vehicle, excluding options and extras, when the vehicle was first offered for sale in Nevada.

Buses, trucks, truck tractors or vehicle combinations having a declared gross weight of 10,000 pounds or more, and trailers and semi-trailers having an unladen weight of 4,000 pounds or more, may be assessed at 85 percent of the original purchase price, in lieu of the MSRP.

The original value of the vehicle may be based on $.50 per pound, if the Department is unable to determine the original MSRP in Nevada, or the original retail price.

Governmental Services Taxes are based on $.04 for each $1.00 of valuation of the vehicle as determined by the Department (NRS 371.040). Vehicles are depreciated for the purpose of the governmental services taxes annually until the vehicle is nine years old. Buses, trucks or truck tractors having a declared gross weight of 10,000 pounds or more and each trailer or semi-trailer having an unladen weight of 4,000 pounds or more are depreciated by the Department annually until they are 10 years old (NRS 371.060).

Governmental Services Taxes are rounded to the nearest dollar.

Note: In Motor Carrier Division, vehicles with a GVW of 26,001 pounds or more are assessed GST and SGST based on the Original Purchase Cost (OPC) chart established by the Division.

SUPPLEMENTAL GOVERNMENTAL SERVICES TAXES

NRS 371.045 authorizes boards of county commissioners to impose additional governmental services taxes of not more than $.01 per $1.00 of valuation of the vehicle.

Supplemental Governmental Services Taxes are rounded to the nearest dollar and will be calculated at the time of registration as applicable to the county in which the vehicle is based.

PRISON INDUSTRY FEE

As required by NRS 482.268, the Department also collects a Prison Industry Fee of $.50 per license plate.

SECTION VI

MOVEMENT PERMITS

15-DAY SPECIAL DRIVE-AWAY PERMIT
NRS 482.3955

The 15-Day Special Drive-Away Permit (VP-110) allows a vehicle to be driven to a destination outside of the State of Nevada for registration and title transfer. The permit may be purchased for the movement of any vehicle to be sold outside of the State of Nevada or for the movement of a vehicle purchased in Nevada by an out-of-state resident. The permit is a secure document and may not be photocopied or duplicated in any manner.

The permit is not intended for casual driving.

The fee for the permit is $8.25.

The permit is only valid for the dates and destinations as shown on the permit for a maximum of 15 days. The permit expires at 11:59 p.m. on the Expiration Date.

When a vehicle is sold to an out-of-state resident, the MCO or Certificate of Title may be given to the customer. If there is a security interest in the vehicle the documents must be sent directly to the lienholder. The customer may be provided with photocopies of the documents.

The provisions of Nevada Administrative Code 372.708 must be followed if the sale is exempt from sales tax. The purchaser must be furnished with an affidavit in a format prescribed by the Nevada Department of Taxation.

The permit must be affixed to the lower right-hand corner of the vehicle's windshield. Permit may only be used for the vehicle that it was assigned to. In accordance with Nevada Revised Statute NRS 485.185, insurance must be maintained while using this permit.

INSTRUCTIONS FOR COMPLETING THE 15-DAY SPECIAL DRIVE-AWAY PERMIT
(FORM VP-110)

1. Beginning Date: Enter the first date the permit will be effective.

2. Expiration Date: Enter the date the permit will expire. The date must not be more than 15 days after the Beginning Date.

3. Year, Make, and VIN: Enter the complete description of the vehicle.

4. Present Location: Enter the state where the vehicle is currently located.

5. Destination: Enter the state where the vehicle is going to be moved to.

6. Owner Signature: Registered owner signs this line.

7. Issue Date: Enter the date permit is issued. The Issue date can be the same as or older than the Beginning Date.

DMV
Nevada Department of Motor Vehicles

555 Wright Way
Carson City, NV 89711
Reno/Sparks/Carson City (775) 684-4DMV (4368)
Las Vegas area (702) 486-4DMV (4368)
Rural Nevada or Out of State (877) 368-7828
www.dmvnv.com

Fee $8.25

SPECIAL DRIVE-AWAY PERMIT No: 1017001

Valid for 15 Days
(Expires 11:59 PM on the Date of Expiration)

Beginning Date: 1 _____
Month Day Year

Expiration Date: 2 _____
Month Day Year

This permit authorizes the operation of the following vehicle:

Year: 3 _____ Make: 3 _____

VIN: 3 _____

Present Location: 4 _____ Destination: 5 _____

Owner Signature: 6 _____ Issue Date: 7 _____

I understand that I am required to maintain motor vehicle liability insurance on this vehicle as required by NRS 485.185. Trailers are exempt from this requirement.

(O) 3625

RD-110 (Rev 12-2006)

DEALER'S REPORT OF SALE
(DEALER PLACARD)

Dealer Placards must be purchased from the Department and may be purchased at full service DMV offices with Occupational and Business License Sections or by mail through the Carson City office of the Compliance Enforcement Division.

A Dealer Placard is given to the buyer of a vehicle by the dealer upon their entering into a contract of sale for a vehicle. The Dealer Placard is valid for a period of thirty days from the date the contract of sale was entered into.

The Dealer Placard must be displayed on the rear of the vehicle; be free from foreign materials and clearly visible from the rear of the vehicle, and include the date of its expiration. It may be displayed in the rear license plate holder or rear window of the vehicle. If displayed in the rear window, the placard must be clearly visible and not obscured or diminished by tinting or sunshade materials.

The Dealer Placard is a secure document and may not be photocopied or duplicated in any manner.

INSTRUCTIONS FOR COMPLETING THE DEALER PLACARD

1. Enter the month, day, and year of expiration on the Dealer Placard. The expiration date is 30 days from the date the Dealer Placard is issued to the customer's vehicle. Use large block numbers created with a broad black or dark blue ink felt marker or computer generated font at approximately 3/16 of an inch wide for easy visibility, see sample for block numbers.

2. Enter the date the Dealer Placard is issued for the vehicle.

3. Enter the name of the dealership where the vehicle was purchased and that issued the Dealer Placard.

4. Enter the complete description of the vehicle, including the vehicle identification number (VIN), year and make.

5. Enter the business license number of the dealership.

6. Enter the control number for the Dealer's Report of Sale.

DEALER PLACARD

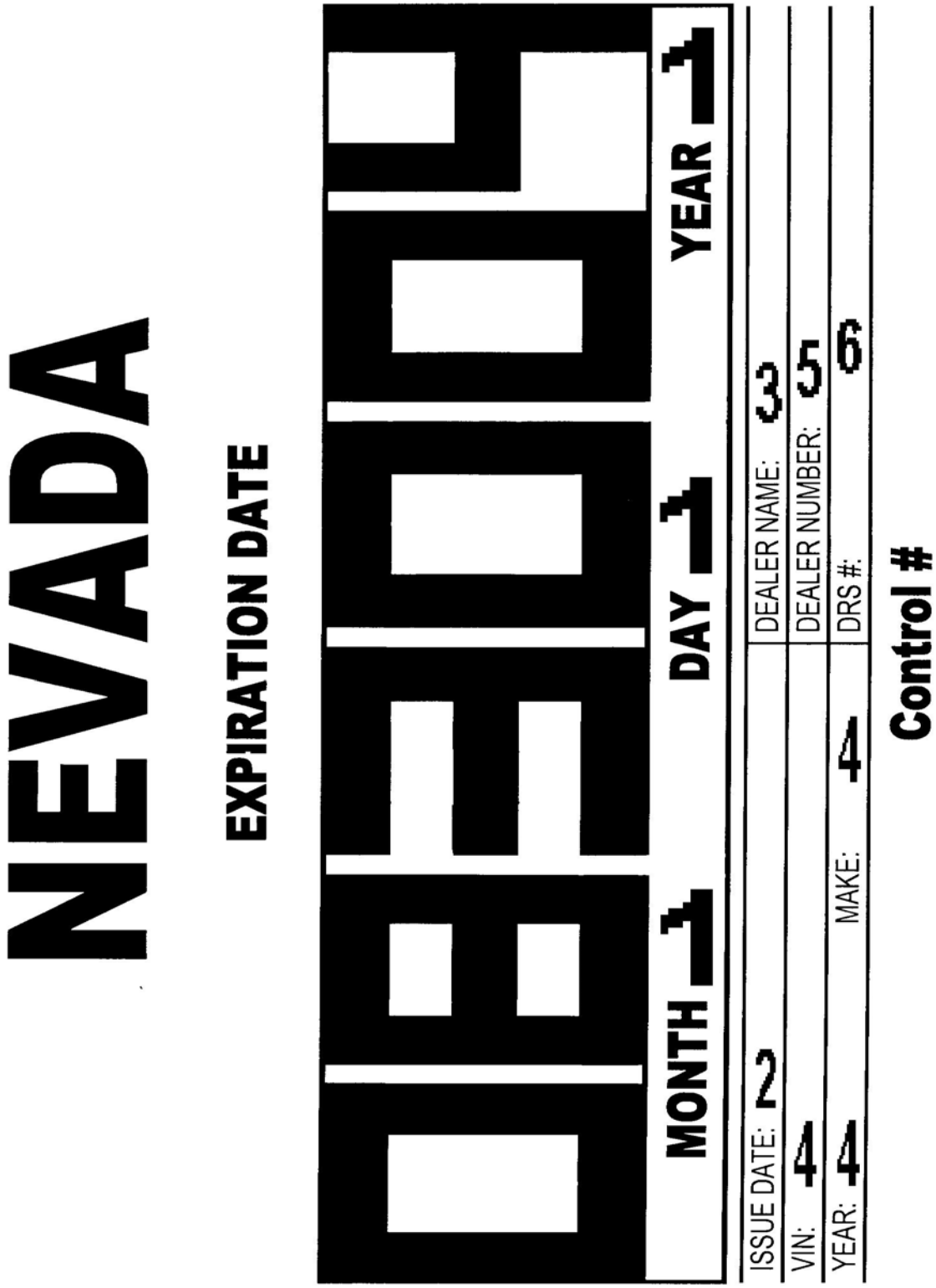

SECTION VII

FINANCIAL INSTITUTION INFORMATION

RECORDING A LIEN

If a financial institution is applying for a Nevada Certificate of Title and the sale is not accomplished through a Nevada dealer:

- The outstanding title must be properly released and reassigned
- All supporting documents have complete and correct information
- Submit the transfer documents with the applicable title fee

If the vehicle will not be registered, and the lienholder wishes to apply for a Nevada Certificate of Title to perfect the lien, and the outstanding title is a Nevada title, the following must be submitted:

- The properly endorsed title
- Sales tax or proof that sales tax has been paid
- The $28.25 title fee ($43.25 if the vehicle is not present in or registered in Nevada)

If the vehicle will not be registered, and the outstanding title is an out-of-state title, the following must be submitted:

- The properly endorsed title
- A completed Vehicle Inspection Certificate (Form VP-15)
- Sales tax or proof that sales tax has been paid
- The $28.25 title fee ($43.25 if the vehicle is not present in or registered in Nevada)

If the new or used vehicle will not be registered, and was sold by a Nevada dealer, the following must be submitted:

- The MCO or properly endorsed outstanding title
- A Dealer's Report of Sale
- The $28.25 title fee ($43.25 if the vehicle is not present in or registered in Nevada)

If the new or used vehicle will not be registered, and it was purchased from an out-of-state dealer, the following must be submitted:

- The MCO or properly endorsed title
- A completed Vehicle Inspection Certificate (Form VP-15)
- Sales tax or proof that sales tax has been paid
- The $28.25 title fee ($43.25 if the vehicle is not present in or registered in Nevada)

Note: If a lienholder does not receive a Nevada Certificate of Title within 120 days after submitting title documents contact DMV Records Section see address below. A title search will be conducted.

Nevada Department of Motor Vehicles
Central Services & Records Division
Records Section
555 Wright Way
Carson City, NV 89711-0250
(775) 684-4590

SECTION VIII

RECORDS SECTION

ACCESSING MOTOR VEHICLE REGISTRATION/TITLE INFORMATION

The Department of Motor Vehicles is authorized to maintain an information reporting service for driver's license, vehicle registration, and title records.

The Department's Central Services and Records Division, Records Section in Carson City is the only office authorized to release records.

To request records, an *Application for Individual Record Information* (Form IR-002) and *Affidavit* (Form IR-003) must be completed and submitted to the Department. The *Application for Individual Record Information* (Form IR-002) may be obtained on the DMV website (see below) or by contacting the Department. The application, affidavit, and any supporting documentation and fees will be forwarded and processed by Records Section in Carson City.

If a firm or company wishes to have an account with the Department, an *Application for Records Service* (Form IR-001) and an *Affidavit* (Form IR-003) must be completed, signed, notarized and submitted to the Department. A copy of the applicable business license and/or private investigator's license must be submitted with the application and affidavit.

- When the account is established, the applicant will be formally notified by letter.
- The notification will include the account code number.
- Monthly-itemized statements will be sent to each account holder indicating services rendered by the Department for the previous month.
- Payments are due within thirty days from the date of the statement.
- Inquiries will not be processed without the assigned account code number.

Nevada law prohibits the release of license plate numbers or social security numbers.

For further information or forms visit our web site at www.dmvnv.com or contact us at:

Nevada Department of Motor Vehicles
Central Services & Records Division
Records Section
555 Wright Way
Carson City, NV 89711-0250
(775) 684-4590

Central Services Records Section
555 Wright Way
Carson City, Nevada 89711-0250
(775) 684 - 4590
www.dmvnv.com

APPLICATION FOR RECORDS SERVICE

Business Name_____

Mailing Address_____
City State Zip

Physical Address_____
City State Zip

Email Address_____

Telephone No (___)_____ Fax No (___)_____

Person(s) Authorized to Use Account_____

Type of Business_____

Describe the type and use of information you will be requesting_____

_____

Credit Reference *_____
Firm Name Address Tel. No.

_____
Firm Name Address Tel. No.

Have you had a previous account with the records section? _____If yes, under what

Name? _____Account No? _____When? _____

I hereby certify the above information is true and correct, and the information obtained will be used for the purpose stated above and in accordance with the Drivers Privacy Protection Act.

It is further agreed payment on this account will be made within thirty (30) days of receipt of the billing and, if required, a bond insuring payment of the account. *

_____
SIGNATURE OF APPLICANT DATE

_____
PRINTED NAME OF APPLICANT DATE

* These sections do not apply to governmental agencies.

_____

OFFICE USE ONLY

ACCOUNT NO :_____

IR001 (6/2003)

Central Services Records Section
555 Wright Way
Carson City, Nevada 89711-0250
(775) 684 - 4590
www.dmvnv.com

State of _____)
) §
County of _____)

AFFIDAVIT

Being first duly sworn under penalty of perjury I hereby state:

(a) I have read, fully understand and agree to abide by the laws and regulations now in effect and hereinafter enacted or adopted regarding the manner in which personal information from the Department of Motor Vehicles driver's license and registration files and records may be obtained and the limited uses which are permitted;

(b) I understand that any sale or disclosure of information so obtained must be in accordance with the provisions of this section. Specifically, that I must keep records of such sale or disclosure for five years for department inspection, and that such sale or disclosure may only be for a use permitted under law;

(c) I understand that a record will be maintained by the department of any information which I request;

(d) I understand that a violation of the provisions of NRS 481.063 is a criminal offense. Specifically, that it is unlawful to make a false representation to obtain any information from the department, or to knowingly obtain or disclose any information from the files or records of the department for any use not permitted by the provisions of this chapter.

(e) The agency shall keep all data, information, reports, tests, manuals, instructions, plans, system designs, computer codes, and any documents or drawings received from the State of Nevada, Department of Motor Vehicles ("Department"), or created by the agency as necessary to render performance under this Agreement, strictly confidential. Except for the sharing of information among law enforcement agencies for law enforcement purposes, the agency agrees that it may not disclose any of the aforementioned items to a person who is not a party to this agreement absent the express written consent of the Department. The agency further understands and agrees that the Department may be required to disclose, in certain instances, some of the above items in compliance with Nevada Public Records Law, and these instances do not change the obligations of the agency to maintain confidentiality as set out above.

The confidential items, as set out above, specifically include, but are not limited to, the following items:

1) Information regarding security passwords, security access codes, and security programs; access codes for software applications; and security procedures, processes, and recovery plans.
2) Specific data collected in preparation of or essential to the Department's business.
3) Security testing results, especially if the results identify specific system vulnerabilities.

The agency also agrees and understands that this confidentiality provision's purpose is to prevent public disclosure that may have an impact on public safety or security, including but not limited to security of personal information.

In addition to any other indemnification agreements contained in this Affidavit, The agency further agrees to indemnify, hold harmless, and defend the Department from and against all liability, claims, actions, damages, losses, and expenses, including, without limitation, reasonable attorneys' fees and costs, based on the agencies release of the aforementioned items.

If the agency must disclose some of the above items to a third party, The agency shall obtain the written consent of the Department and the third party must agree, in writing, to the terms of this provision.

The terms of this provision shall survive the completion of performance under this Agreement and/or the termination of this Agreement.

Page 1 of 2

DATED this _____ day of _____, (20 __)

_____

Signature of Applicant Printed Name of Applicant

_____

Title (if applicable)

Signed and sworn to before me this

_____ day of _____, (20 __)

By _____

_____

NOTARY Public or Authorized Nevada DMV Representative

IR003 (1/2008)

Page 2 of 2

Central Services Record Section
555 Wright Way
Carson City, Nevada 89711-0250
(775) 684 - 4590
www.dmvnv.com

RECORD SECTION FEE SCHEDULE

TRANSACTION CODE	SEARCH DESCRIPTION	FEES
D1	DRIVER'S LICENSE INFORMATION	$5.00
D2	DRIVER'S RECORD INFORMATION	$7.00
D3	DRIVER'S LICENSE CLEARANCE LETTER	$6.00
D5	ADDITIONAL MICROFILM RESEARCH	$3.00
V1	VEHICLE REGISTRATION INFORMATION	$5.00
V2	VEHICLE TITLE INFORMATION	$5.00
V3	VEHICLE HISTORY	$7.00
S2	CERTIFICATION OF DOCUMENTS	$4.00
S3	PHOTO COPY OF EACH PAGE	$3.00
S4	TITLE VERIFICATION LETTER	$7.00

Please make checks payable to the Department of Motor Vehicles **RECORDS SECTION.**

* Governmental agencies are exempt from any fees.

IR004 (6/2003)

V1—VEHICLE REGISTRATION INFORMATION

This information is limited to the current registration records, including the year, make, expiration date, vehicle identification number and registered owner's name and address. To request this information, the following must be supplied:

- Vehicle Identification Number (VIN); and
- The name of the individual or company and the corresponding address of the individual or company.

V2—VEHICLE TITLE INFORMATION

This information is limited to the current Nevada title records, including the name of the registered owner on the title, the name and address of the lienholder and the date the title was created. To request this information, provide the vehicle identification number (VIN) with the request for vehicle title information.

V3—VEHICLE HISTORY

Upon request, research can be done to determine the first and subsequent registration of the vehicle in Nevada, the documents used to register the vehicle or the documents used to title the vehicle, etc. Records are available for a ten-year period.

Customers maintaining accounts with the Department may request records by telephone at (775) 684-4590, or toll-free within Nevada at 1-800-992-7945.

SECTION IX

EMISSION CONTROL

NEVADA MOTOR VEHICLE EMISSION CONTROL PROGRAM

SUMMARY

A decentralized, test-and-repair, basic I/M (Inspection and Maintenance) program is operating in Reno (Washoe County). A decentralized, test-and-repair, low-enhanced I/M program is operating in Las Vegas (Clark County).

Model year 1968 and newer vehicles that are over two years old are inspected. All gasoline-powered vehicles (light and heavy duty), and all diesel powered vehicles with a Manufacturer's Gross Vehicle Weight Rating of 14,000 pounds or less that meet this model year criteria are inspected for emissions annually. Vehicle owners that are registering or re-registering their vehicle are required to have their vehicle emission inspected as part of the process (program is registration enforced). The DMV registration database obtains the emission information for vehicles that are involved in the registration process from the vehicle information database (VID). Only gasoline emission analyzers are networked to a vehicle information database (VID) for emissions at this time.

Hybrid Vehicles (Gasoline/Electric), effective October 1, 2007 are exempt from emission testing:

- Based on the model year of the vehicle.
- Exempt for 5 model years. Emission testing will resume in the 6th year.

Note: If vehicle is a 2007 and purchased new in 2008 there is no extension allowed. Emission will be required in the 6th model year, upon renewal in 2013.

VEHICLE RATINGS FOR GASOLINE POWERED VEHICLES

Light-Duty Vehicles Defined

- Trucks with a manufacturer's gross vehicle weight rating less than 8500 pounds
- A passenger motor vehicle that is designed to transport 15 or fewer people
- Van Conversions

Heavy-Duty Vehicles Defined

- Trucks with a manufacturer's gross vehicle weight rating of 8500 pounds or more
- A passenger motor vehicle designed to transport 16 or more people
- Motor home, mini motor home or camper mounted on a chassis

TEST PROCEDURE FOR GASOLINE POWERED VEHICLES

1968 thru 1995 Light Duty Vehicles and 1968 and newer Heavy-Duty Vehicles

- Two-speed emission inspection, measuring for carbon monoxide and hydrocarbons.
- Visual inspection for a properly installed gas cap on all fuel tanks.
- Visual inspection for exhaust smoke and crankcase blowby.
- Visual inspection for tampering of the air injection system, exhaust gas recirculation valve, catalytic converter and fuel inlet restrictor.

  Catalytic converters did not become mandatory in American Automobile Industry until 1975. Vehicle model years 1968 to 1974 are not required to have catalytic converters.

1996 and Newer Light Duty Vehicles

Inspection of "Certified on-board Diagnostics" (OBDII) system on 1996 and newer light-duty vehicles.

EXHAUST GAS STANDARDS

Light Duty	CO	HC
1968-1969	4.0%	800 PPM
1970-1974	3.5%	700 PPM
1975-1978	2.5%	500 PPM
1979-1980	2.0%	500 PPM
1981 newer	1.2%	220 PPM

Heavy Duty	CO	HC
1968-1969	7.0%	1400 PPM
1970-1978	6.0%	1400 PPM
1979	5.0%	1000 PPM
1980	4.0%	1000 PPM
1981 newer	3.5%	1000 PPM

WAIVER REQUIREMENTS FOR GASOLINE POWERED VEHICLES

Clark County:

- $450.00 in repairs related to exhaust gas failures only. A waiver will not be granted for an emission failure due to tampering of emission devices, visible smoke or blowby. Repairs must be completed at an Authorized Station licensed to perform emission related repairs (designated a 2G station) to be eligible for an emission waiver.

- Self-repair provisions are not authorized in Clark County.

Washoe County:

- Self Repair: $200.00 spent on parts related to the exhaust gas failure, other than a catalytic converter, fuel inlet restrictor or air injection system. No waiver for an emission failure due to tampering of emission devices, visible smoke or blowby.

- Shop Repair: $200.00 related to exhaust gas failures only. No waiver will be granted for an emission failure due to tampering of emission devices, visible smoke or blow-by. Repairs must be completed at an Authorized Station licensed to perform emission related repairs. Facilities also noted as 2G.

- In addition to the requirements mentioned, the customer must have the following items present when applying for a waiver:

  1. First failed emissions test before repairs were performed on the vehicle.
  2. Receipts for parts and labor repairs dated after the first failed test.
  3. Second failed emission test after repairs were performed.
  4. Vehicle must be present for inspection to verify repairs were performed.

Note: Vehicles Inspection Reports are valid for 90 days from the date of the test.

DIESEL VEHICLES REQUIRING AN EMISSION INSPECTION

The following Diesel Vehicles are required to have an emission inspection:

- All passenger vehicles regardless of Manufacturer's Gross Vehicle Weight Rating
- All light Duty Motor Vehicles
- All heavy-duty motor vehicles having a manufacturer's gross vehicle weight rating not exceeding 14,000 pounds

Note that the emission inspection requirement is irrelevant to the weight that the registered owner declares, and that only the Manufacturer's Gross Vehicle Weight Rating is the determining factor. These vehicles are tested for opacity (density of smoke existing in the exhaust). Pursuant to NAC 445B.589, all emission control devices that are listed on manufacturer's emission control label for 1981 and newer vehicles are visually inspected. All vehicles that require testing are inspected for a proper fuel cap on all fuel tanks and are required to be in compliance preceding registration or renewal. The diesel vehicles are tested under a load on a dynamometer. The maximum allowable opacity reading in Washoe County is 40% and in Clark County the maximum is 30%.

DIESEL VEHICLES NOT REQUIRING AN EMISSION INSPECTION

The following Diesel Vehicles are not required to have an emission inspection for registration: Heavy Duty motor vehicles with a Manufacturer's Gross Vehicle Weight Rating of 14,001 pounds or more and, vehicles that carry more than 15 passengers with a Manufacturer's Gross Vehicle Weight Rating of 14,001 lbs. or more. These vehicles are tested at random at roadside inspection stations and are not required to have an emission test for registration purposes. Passenger vehicles powered by diesel are not included in this category with the exception of full time all-wheel drive vehicles such as

Hummers. These types of vehicles can receive an emission exemption from the Departments Emission Control Lab's.

SMOKE HOTLINE

Nevada has a Smoking Vehicle Hotline (686-SMOG in Reno, and 642-SMOG in Las Vegas) so that anyone may report a vehicle that is emitting excessive smoke from its exhaust. The information is collected and researched by the Compliance Enforcement Division of the Department of Motor Vehicles. The registered owner is sent a letter notifying them that their vehicle was reported as a smoking vehicle. The letter requests they repair the vehicle if it in fact emits visible smoke.

If a representative of the Department or a Law Enforcement Officer witnesses a vehicle smoking, a Smoking Vehicle Observation Report form is completed. The Department will then require a response from the registered owner of the smoking vehicle.

For more information on the Smoking Vehicle Program call 1-877-368-7828 or the web at www.dmvnv.com/emission.htm.

VEHICLES FOR SALE

It is unlawful for any person (individual or business) to sell, offer for sale, display, operate or leave standing any vehicle that is required by state or federal law to be equipped with pollution devices unless those devices are correctly installed and in operating order.

DEALER SALES

Any dealer who sells a used vehicle that will be registered in a Nevada Emission Control Program area must provide a certificate of compliance at the time the Dealer's Report of Sale is issued.

LICENSEE OVERVIEW

Facilities that perform emission inspections are licensed as either an Authorized Inspection Station (1G) or Authorized Station (2G). Authorized Inspection Stations (1G) can test vehicles for emissions but cannot perform emission related repairs. Authorized Stations (2G) can test vehicle for emissions and also perform emission related repairs.

Individuals licensed to only perform emission inspections are classified as 1G. Individuals licensed to perform emission inspections and emission related repairs are classified as 2G. There are different levels of training and testing requirements for each level of inspector classifications.

FEE SCHEDULES

Fees for inspections are calculated based upon 35 percent of the average shop labor rate, evaluated within each county during the final quarter of each year. There is a six-dollar vehicle inspection report fee that is charged for each inspection throughout the State of Nevada. Maximum fees for each calendar year are calculated during the last quarter of the calendar year and are based on the annual shop labor rate survey conducted by the Department.

CONTACT AGENCY

The Nevada Department of Motor Vehicles is the regulatory agency responsible for administering the I/M Program. Please contact the nearest DMV Emission Control Test Lab noted below, for further information:

Washoe County:
305 Galletti Way
Reno, NV 89512
(775) 684-3581

Clark County:
2701 East Sahara Avenue
Las Vegas, NV 89104
(702) 486-4981

SECTION X

OCCUPATIONAL AND

BUSINESS LICENSING

VEHICLE INDUSTRY
OCCUPATIONAL AND BUSINESS LICENSING
AND REGULATION

The legislature finds and declares the distribution and sale of motor vehicles in the State of Nevada vitally affects the general economy of the state, the public interest and the public welfare. In the exercise of legislative police power, it is necessary to regulate and license motor vehicle manufacturers, distributors, new and used vehicle dealers, rebuilders, leasing companies, brokers, transporters, salespersons and their representatives doing business in the State of Nevada in order to prevent frauds, impositions and other abuses upon its citizens.

The Department of Motor Vehicles (Department) has been charged with the responsibility of regulating the vehicle industry to ensure the legislative declaration and intent is met.

It is incumbent upon each licensee to know the laws governing the vehicle industry and the business for which the licensee is licensed. This information is intended to assist you in that effort.

Locations of the Department of Motor Vehicles, Occupational and Business Licensing offices:

555 Wright Way
Carson City, Nevada 89711-0100
(775) 684-4690

305 Galletti Way
Reno, Nevada 89512-3817
(775) 684-3564

2701 East Sahara Avenue
Las Vegas, Nevada 89104-4170
(702) 486-4930

7170 N. Decatur Blvd.
Las Vegas, Nevada 89131-2798
(702) 486-5569

3920 East Idaho Street
Elko, Nevada 89801-4977
(775) 753-1175

8250 West Flamingo Road
Las Vegas, Nevada 89117-4111
(702) 486-8620

1399 American Pacific Drive
Henderson, Nevada 89074-8806
(702) 486-1371

Licensing forms can be located at our website. www.dmvnv.com

BEING CONTACTED BY THE DEPARTMENT AND AVAILABILITY FOR INSPECTION OF BOOKS AND RECORDS

As a public agency the Department serves you and many other customers. The Department may receive complaints against a licensee from the public. The Department's Compliance Enforcement Division will investigate these complaints in order to protect the public interest and prevent unfair practices.

The law provides for inspection by the Department, of your Dealers Report of Sale books (VP101), pertinent records, and vehicle inventory. As a condition of licensing, licensees are required to make their books and records available for inspection during normal business hours. Licensees are required to produce items for inspection within 3 business days of receiving a request from the Department, at the location specified. While records examination is required, we will make every effort to minimize any detrimental impact to the business.

BUSINESS INFORMATION

BUSINESS LICENSE

The business license is issued to an individual, partnership, LLP, LLC or corporation after receipt of an application and investigation of the applicant(s) by the Department. The license is valid only for the business and owner(s) for which it was issued. The licensed business may not allow any person, who is not a licensed principal or salesperson of the business, to operate under the authority of the license. The licensee may not lease the license to another business or person. The license is not an asset of the business and is not transferred to new owners should the business be sold.

If a licensee changes the name or location of the established place of business, he can not conduct business under the new name or at the new location, until he has been issued a license for the new name or location, from the Department. Forms and instructions for change may be obtained at any office of the Occupational and Business Licensing office, or on the DMV web site, www.dmvnv.com. NRS 482.326.4

NAME OF BUSINESS

Applicants for a business license as a vehicle dealer may not use certain words or terms in the business name, signs or trade style. NAC 482.190

- The words “Finance,” “Loan” or similar expressions may not be used unless the firm is actually engaged in the finance business.

- Because the actual value of used vehicles is difficult to establish, specific claims of savings must not be used. The terms “Wholesale” or “Discount” must not be used in the business firm’s name, display sign or in retail vehicle advertising to imply that vehicles are being offered at wholesale when this is not the case.

- The words “Repo,” “Repossessed” or “Repossession” may not be used in the business firm’s name, trade style, signs or display signs, unless the business is actually selling only bona fide repossessed vehicles.

LEGIBLE SIGN CONTAINING NAME OF BUSINESS

A display sign is required at each established place of business. The sign containing the name of the business must be permanently affixed. The lettering must be of sufficient size to be clearly legible from the center of the nearest street or roadway, and the lettering must be at least 8 inches high and formed by lines that are at least 1 inch wide. Two photos of the building with the display sign are required as part of the licensing packet. The photos must clearly show both the building and display sign. NRS 482.332

The display sign will not be considered acceptable if it is:

1. Mounted on a truck, trailer or other mobile equipment.

2. Taped to, or leaning against the building.

3. Written in marker on the door of the building.

4. Showing a name different than that listed on the application.

PLACE OF BUSINESS

1. Vehicle dealers, rebuilders**,** distributors, manufacturers, brokers, and lessors are required to maintain an established place of business in this state which:

    A. Includes a permanent enclosed building, owned in fee or leased, with sufficient space to display one or more vehicles.

    B. Is principally used by the dealer to conduct business.

    C. Is large enough to accommodate an office and provide a safe place to keep the books and records of the business.

    D. Has boundaries that are clearly marked. If more than one business is located at the address, boundaries clearly separating one business from the other are required.

2. Short-term Lessors must:

    A. Designate one location as the principal place of business and all other locations where business is conducted as a branch that is operated pursuant to the license for the principal place of business. NRS 482.323

    B. Notify the Department of each branch where business is conducted by filing, on forms provided by the Department, information pertaining to each branch as required by the Department. NRS 482.323

3. Every broker shall maintain an established place of business in this state that is in a permanent building with sufficient space to accommodate an office. NRS 482.323

4. If a dealer changes the location of the established place(s) of business, written notification must be made to the Department of the change within ten days. Forms and instructions for change of address may be obtained at any

Occupational and Business Licensing office or on the DMV web site at www.dmvnv.com. NRS 482.326

5. A franchise dealer cannot relocate the business within the relevant market area of an existing dealer who sells the same line and make of vehicles. NRS 482.36357

BUSINESS STRUCTURE

Application for business license as a manufacturer, distributor, dealer, rebuilder, lessor or broker requires the applicant to list the business structure as individual, partnership, LLP, LLC or corporation.

1. When listing the business as a partnership, all partners (full legal names) must be listed on the application.

2. If the structure of the business is a limited partnership, it must be noted on the application and the structure of the limited partnership disclosed.

3. If the structure of the business is a limited liability company, the filing with the Nevada Secretary of State must accompany the application along with a list of members and managers.

4. If applying for a business license as a corporation, a copy of the corporate filing document(s) with the Secretary of State's office must accompany the application. These documents must list the president, vice president and secretary/treasurer.

5. If the business has a Resident Agent or Manager who will manage and control the business, list the full legal name of this person on the application as either the Resident Agent or Manager.

APPLICATION FOR BUSINESS LICENSE

A business or individual desiring to be licensed in the State of Nevada as a vehicle dealer, rebuilder, broker, manufacturer, distributor or lessor may acquire an application packet from any office of the Department of Motor Vehicles Compliance Enforcement Division, Occupational and Business Licensing offices as listed in Section X, Page 2 or telephone (775) 684-4690 to have an application packet mailed to you.

Processing of the application will be accomplished in approximately one to two weeks of receipt of a properly completed licensing packet. The applicant will be notified of denial or approval of the license and, if applicable, the license number assigned to the business.

Applications and requirement sheets for the following business licenses may also be obtained at any of the Occupational and Business Licensing offices and on the Department website at www.dmvnv.com :

- Vehicle Transporter
- Automobile Wrecker
- Body Shop
- Salvage Pool
- Emission Station
- Garage Registration
- Drive School
- DUI School
- Traffic Safety School

DEALER, REBUILDER, LESSOR, MANUFACTURER, DISTRIBUTOR (NRS 482.325)

LICENSING REQUIREMENTS:

1. Application for Business License (form OBL-237) completed in full and signed by a principal of the business.

2. Personal History Questionnaire form DS-242 completed by each principal or corporate officer being listed on the license application.

3. Authorization for Release of Information form DS-254 signed by each principal or corporate officer. Release must be notarized or signature witnessed by an authorized Nevada DMV representative.

4. Two full sets of fingerprints on cards supplied by the Department for each principal and/or corporate officer. Applicants must be fingerprinted by an authorized DMV representative or a law enforcement agency. Some agencies may charge for fingerprinting. Check with your local agency.

5. Child Support Information (form DS-268) completed and signed by each principal.

6. Licensee Acknowledgement (form DS-308).

7. A surety bond (form DS-210) or a deposit in lieu of bond in the amount of $10,000 for utility or boat trailers with an unladen weight or 3,500 pounds or less, $50,000 for motorcycles, horse trailers without living quarters or utility trailers with an unladen weight of 3,501 pounds or more and $100,000 for all other vehicle types.

8. Insurance certificate showing automobile liability coverage. See insurance information sheet.

9. A non-refundable license application fee of $125 and a fingerprint processing fee of $51.25 for each principal listed on the application.

10. City or county business license.

11. Fictitious Firm Name filing.

12. Copy of Certificate of Incorporation and Corporate filing with names of officers, filed with the State of Nevada, Secretary of State's office, if applicable.

13. The federal identification number of the business.

14. Established place of business within the state, with a permanent enclosed building large enough to accommodate an office and sufficient space to display one or more vehicles.

15. A permanently affixed display sign with the name of the business in lettering eight inches high, formed by lines that are at least one inch wide. The sign must be clearly legible from the center of the nearest street or roadway. The sign must not contain any of the following terms as part of the name: “discount,” “wholesale” or similar expressions.

16. Two color photographs that clearly show the exterior of the business to include the display sign.

17. New vehicle dealers must provide franchise letters from manufacturers or distributors authorizing sale of designated vehicles. The letter must contain the dealer’s “Doing Business As” name and physical address.

18. Manufacturers: Fax confirmation or confirming letter from the SAE Strategic Alliance notifying the applicant of their World Manufacturer Identifier (WMI) assignment. Contact SAE at www.sae.org or douds@sae.org or 724/772-8511.

VEHICLE BROKER (NRS 482.333)

LICENSING REQUIREMENTS

1. Application for Business License (form OBL-237) must be completed in full and signed by a principal of the business.

2. Personal History Questionnaire (form DS-242) completed by each principal or corporate officer being listed on the license application.

3. Authorization for Release of Information (form DS-254) signed by each principal or corporate officer. Release must be notarized or signature witnessed by an authorized DMV representative.

4. Two full sets of fingerprints on cards supplied by the Department for each principal or corporate officer. Applicants must be fingerprinted by an authorized DMV representative or a law enforcement agency. Some agencies may charge to fingerprint. Check with your local agency.

5. Child Support Information (form DS-268) completed and signed by each principal.

6. Licensee Acknowledgement (form DS-308).

7. A surety bond (form DS-210) or a deposit in lieu of bond in the amount of $100,000. NRS 482.3333

8. A non-refundable license fee of $125 and a fingerprint processing fee of $51.25 for each principal listed on the application.

9. City or county business license.

10. Fictitious Firm Name filing.

11. Copy of Certificate of Incorporation and Corporate filing with names of the officers filed with the State of Nevada, Secretary of State's office, if applicable.

12. The federal identification number of the business.

13. An established place of business within the state with a permanent enclosed building large enough to accommodate an office.

14. A permanently affixed display sign with the name of the business in lettering eight inches high, formed by lines that are at least one inch wide. The sign must be clearly legible from the center of the nearest street or roadway. The sign must

not contain any of the following terms as part of the name: “discount,” “wholesale” or similar expressions.

15. Two color photographs that clearly show the exterior of the business to include the display sign.

16. Each Broker must open and maintain a separate trust account in a federally insured bank or savings and loan association in this state into which the broker must deposit any money received from a prospective buyer as a deposit on a vehicle.

NOTE: A broker may not engage in the activities of buying and selling vehicles.

INSTRUCTIONS FOR COMPLETING THE APPLICATION FOR BUSINESS LICENSE AND GARAGE REGISTRATION FORM (Front of OBL-237)

1. License Number - if you are submitting an application for initial licensing, leave this blank. If you are making changes to an existing license, list the DMV issued license number of the business.

2. Individual/Corporate Name - if you are doing business as an individual or partnership, list all applicants' full legal names. If you are doing business as a LLP, LLC or corporation, list name of the corporation.

3. Name - list the name you are doing business as, which will also be the name on your city/county business license, fictitious firm name filing and the display sign.

4. Mailing Address - list the address you receive mail for the business; all correspondence and licenses issued by the Department will be mailed to this address.

5. Physical Address - list physical address of the business. It must also be on the city/county business license.

6. Business telephone and Fax Number - list telephone and fax numbers of the business, if you have a fax machine.

7. Electronic Mail Address - if your business has an e-mail address, list the address here.

8. Federal Employer Identification Number (FEIN) - must be listed, the Social Security Administration assigns this number to businesses.

9. If you are applying for a dealer's license, use the first box and check each type of business activity you will be conducting. The DMV business license will be limited to the types of activities checked.

10. If you are applying for any type of license listed in the second or third box, check the appropriate box (each license listed in the boxes is a separate license). Additional applications are necessary if applying for more than one type of license.

11. Reason for Submittal - is to be used for existing licensees to report a change in the business. One or more boxes may be checked in this section, additional documentation may be required. See the change section of this workbook for more information.

12. New Vehicle Franchised Dealers - Dealers selling new vehicles must list all vehicle franchises the business is authorized to sell. Attach copies of franchise letter(s.) The letter(s) must contain the dealer's DBA and physical address.

13. Type of Business Structure - check appropriate box reflecting type of business: Individual, Partnership, LLP, LLC or corporation. If the business is an LLP, LLC or a corporation, list the state in which the business is incorporated. A copy of the corporate filing must be attached to this application. If the business has been incorporated in another state, foreign corporation filing must be submitted with Nevada Secretary of State's Office and a copy of the filing provided to the Department.

14. Ownership - list the full legal names and titles of each principal of the business.

15. Resident Agent - if your business wishes to list a resident agent, list that person's full legal name.

Occupational and Business Licensing
555 Wright Way
Carson City, Nevada 89711
(775) 684–4690
www.dmvnv.com

APPLICATION FOR BUSINESS LICENSE AND GARAGE REGISTRATION

License Number _____ 1
(If new applicant, please leave blank)

Individual/Corporate Name _____ 2

DBA Name _____ 3

Mailing Address _____ 4
Street City State Zip

Physical Address _____ 5
Street City State Zip

Business Phone Number (_____) _____ 6 - _____ Business Fax Number (_____) _____ 6 - _____

Electronic Mail Address _____ 7 FEIN _____ 8
(If Applicable)

Dealer (check business activity)	Business Type (one per application)	Schools (business activity)	Emission Control (business activity)	Reason for submittal
☐ A. New Motor Vehicle ☐ B. Used Motor Vehicle ☐ C. New Trailer ☐ D. Used Trailer ☐ E. New Motorcycle ☐ F. Used Motorcycle ☐ G. Long Term Lessor ☐ H. Short Term Lessor 9	☐ I. Rebuilder ☐ J. Manufacturer ☐ K. Distributor ☐ L. Wrecker ☐ N. Salvage Pool ☐ O. Transporter ☐ P. Body Shop ☐ Class A ☐ Q. Broker ☐ R. Garage No. of Mechanics _____ Type of Repairs 10 _____	☐ S. Drive School ☐ Behind the wheel ☐ Classroom ☐ Correspondence ☐ Internet ☐ Minors ☐ T. Traffic Safety School ☐ Correspondence ☐ Internet ☐ U. DUI School ☐ Correspondence ☐ Internet 10	☐ M. Emission ☐ Test only ☐ Test & repair ☐ Fleet, test only ☐ Fleet, test & repair 10	☐ Original application ☐ Additional location ☐ Additional activity ☐ Deleting activity _____ ☐ Duplicate license ☐ Change of address ☐ Change of principal(s) ☐ Change of corporation ☐ Change of business name Previous name 11 _____ ☐ Change of curriculum ☐ Change of class schedule

Dealers selling new vehicles must list vehicle makes franchised to sell:

12

☐ Individual ☐ Partnership ☐ LLP ☐ LLC ☐ Corporation Incorporated in State of 13

OWNERSHIP: List name and title of each individual, each partner, whether general or limited, or each principal officer, director or stockholder participating in the direction, control or management of the policy of the business. Use separate page if necessary. Ownership change requires notification to the Department.

NAME (LAST, FIRST, MIDDLE)	TITLE
14	

Resident Agent: 15 _____

OBL237 (10/2007)

INSTRUCTIONS FOR COMPLETING APPLICATION FOR BUSINESS LICENSE (Back of OBL-237)

1. Bank Information - list name and address of bank(s) and business account number(s.) If the bank account is not in the business name, list the name the account is under.

2. For Garage Registration Only: Additional Location(s) - if you are applying for a garage registration, please complete this section.

3. Signature - the application must be signed by a principal listed for the business. The title of the principal must be listed, and the full legal name of the individual verifying the principal's identification must also be listed.

4. The Principal's Signature - must be notarized or witnessed by an authorized Nevada DMV representative.

For Business Applicants Only:

NAME AND ADDRESS OF BANK AND BUSINESS ACCOUNT NUMBER		
1		
Name of Bank	Address of Bank	Account Number
Name of Bank	Address of Bank	Account Number
If bank account is not carried under same name as shown on this application, under what name is it carried?		
Name of person(s) authorized to draw funds or issue checks from accounts.		

For Garage Registration Only: Additional Location(s)

2 Name of Business	Address	Phone Number and Manager's Name	# of Technicians

I hereby authorize the Department of Motor Vehicles to make any background investigation necessary as it pertains to the issuance of my license. I understand that the providing of false information or the omission of the requested information in this application is grounds to deny, suspend, or revoke my business license and constitutes a gross misdemeanor under Chapter 482, 483, 487, and 445 B of the Nevada Revised Statutes.

NOTE: TO BE SIGNED BY SOLE OWNER, PARTNER, OR OFFICER OF THE CORPORATION ONLY.

Signed 3 _____

Title _____

Date _____

ID Verified By _____

Subscribed and sworn before me this 4 _____day of_____, _____

_____

Notary Public or Authorized Nevada DMV Representative

Nevada Department of Motor Vehicles

Occupational and Business Licensing
555 Wright Way
Carson City, Nevada 89711 - 0100
(775) 684-4690
www.dmvnv.com

PERSONAL HISTORY QUESTIONNAIRE

☐ New ☐ Update

This questionnaire is filed as part of the licensing application for:

Business License: ☐ Principal ☐ Resident Agent/Manager

Occupational License: ☐ Salesman ☐ Drive School Instructor ☐ Traffic Safety School Instructor
☐ Inspector ☐ DUI School Instructor

All lines and spaces must be completed in full. If not applicable enter (N/A).

Full Legal Name: _____
Last First Middle

Additional names you have been known by *(maiden name, stage name, nickname)*:

_____

_____

Mailing Address _____
Street City State Zip

Physical Address _____
Street City State Zip

Home Phone _____ Additional Phone _____

Driver's License No. _____ State _____

Date of Birth _____ Place of Birth _____
City State

Social Security No. _____ ☐ Female ☐ Male

Height _____ Weight _____ Hair _____ Eyes _____

Scars, marks, and/or tattoos _____

_____
Photo

(Full face, shoulder and above)

Personal History Questionnaire Page 2

Employment History for the past 5 years beginning with the most current *(no gaps.)*

From (month/year)	To (month/year)	Employer	Complete Address/Telephone #

Drive, DUI or Traffic Safety applicants only:
Have you ever been arrested or convicted of a crime or offense, either felony, gross misdemeanor or misdemeanor, including traffic misdemeanor offenses? ☐ Yes ☐ No

All other applicants:
Have you ever been arrested or convicted of a crime or offense, either felony, gross misdemeanor or misdemeanor, excluding traffic misdemeanor offenses? ☐ Yes ☐ No

If "Yes," list separate charge by date of arrest. Describe the offense, court, and disposition in the appropriate columns. If additional space required, use a separate sheet of paper.

Date of Arrest	Nature of Offense	Court of Jurisdiction	Disposition of Offense

List names, complete address, and phone numbers of two personal references.

Name	Address	Phone Number

Are you currently, or have you ever been under supervision of a parole or probation agency of any state? If so, provide name and address of the agency, name of supervising officer and phone number. Provide a copy of your discharge, if appropriate *(explain.)*

_____

_____

_____

_____

Personal History Questionnaire Page 3

Applicant's Name _____

Personal History Questionnaire

Have you previously held or do you presently have a business or occupational license issued by the Department of Motor Vehicles in this State or by any other State's occupational licensing authority? ☐ Yes ☐ No

If "Yes", license number _____ State _____

Have you ever had a business or occupational license, in this state or any other state including a driver's license, which was denied, suspended, revoked, or had administrative sanction against it? Yes No *(if Yes, explain)*

_____

_____

_____

I certify under penalty of perjury that the information contained in my Personal History Questionnaire is true and correct. I hereby authorize the Department of Motor Vehicles to make any background investigation necessary as it pertains to the issuance of my license. I understand that the providing of false information or the omission of the requested information in this questionnaire is grounds to deny, suspend, or revoke my business or occupational license. I further understand that filing false information to obtain any license or permit is a criminal act as defined in Nevada Revised Statutes and Nevada Administrative Codes in addition to being subject to the administrative sanctions as prescribed by law.

_____ _____

Signature of Applicant Date

Subscribed and sworn before me this _____ day of _____, _____

_____

Notary Public or Authorized Nevada DMV Representative

* * * * * * * * * * * * * * *

For Department Use Only
Case No _____
☐ Application completed and signed ☐ Fingerprints ☐ Background Investigation ☐ Total Fees $_____

Application reviewed and accepted:

_____ _____

Signature of Employee Date

_____ _____

Signature of Supervisor *(if applicable)* Date

Recommendation: ☐ Approved ☐ Denied

_____ _____

Signature of Investigator *(if applicable)* Date

Personal History Questionnaire Page 4

Applicant's Name _____

Personal History Questionnaire

IMPORTANT

Federal Welfare Reform, as implemented by the 1997 Session of the Nevada Legislature by S.B. 356, requires that professional and occupational licensing agencies add certain questions regarding child support to all applications for new licenses and for renewal of all occupational licenses.

Each occupational and business license applicant, applying for a new license or for renewal of an existing license must complete and sign the child support information below.

Your application cannot be processed without submitting this form, completed and signed.

CHILD SUPPORT INFORMATION

Please mark the appropriate response (failure to mark one of the three will result in denial of the application.)

- ☐ I am not subject to a court order for the support of a child.
- ☐ I am subject to a court order for the support of one or more children and am in compliance with a plan approved by the district attorney or other public agency enforcing the order for the repayment of the amount owed pursuant to the order. Indicate the county, state, and contact number below, for verification.
- ☐ I am subject to a court order for the support of one or more children and am not in compliance with the order or plan approved by the district attorney or other public agency enforcing the order for the repayment of the amount owed pursuant to the order.

County _____ State _____ Contact Number _____

Applicant's Social Security No. _____

Applicant's Full Legal Name *(please print)* _____

Signature of Applicant _____

Date _____

Business or Occupational License Number _____

DS-242 (9/2006)

Occupational and Business Licensing
555 Wright Way
Carson City, Nevada 89711-0100
(775) 684-4690
www.dmvnv.com

AUTHORIZATION FOR RELEASE OF INFORMATION

I authorize any person or entity contacted by the Department of Motor Vehicles, its agents or employees, during the course of my initial and annual background investigations, to furnish to such agents or employees, any information or opinions they may have.

I hereby release from liability and promise to hold harmless under any and all causes of legal action, the State of Nevada, the Department of Motor Vehicles, or any of its agents or employees, and any and all persons or entities who shall furnish any information or opinions to the agents or employees, of the Department of Motor Vehicles who conduct my background investigation.

This waiver and its authority is valid until such time the applicant is no longer licensed by the State of Nevada, Department of Motor Vehicles and a request has been made of the Central Repository to transfer the applicant's fingerprint record to inactive status.

I _____ having made application with the Department of Motor
Name (please print)

Vehicles, for business or occupational licensing authorize the department to forward my fingerprints to the Central Repository for Nevada records of criminal history and for submission to the Federal Bureau of Investigation for its criminal history report. I fully understand that this is an annual process and by signing this form I hereby grant the Department permission to perform a background check, as they deem necessary.

_____ _____
Signature of Applicant Date

Subscribed and sworn before me this _____ day of _____, _____

_____
Notary Public or Authorized Nevada DMV Representative

DS254 (3-2006) O-2208

Occupational and Business Licensing
555 Wright Way
Carson City, Nevada 89711-0100
(775) 684-4690
www.dmvnv.com

CHILD SUPPORT INFORMATION

Federal Welfare Reform, as implemented by the 1997 Session of the Nevada Legislature by S.B. 356, requires that professional and occupational licensing agencies add certain questions regarding child support to all applications for new licenses and for renewal of all occupational licenses.

Each new business and occupational license applicant, business principal or salesperson applying for a new or to renew his or her license must complete and sign the Child Support Information below.

Your application cannot be processed without submitting this form, completed and signed. You may duplicate this form.

Please mark the appropriate response. Failure to mark one of the three will result in denial of the application.

☐ I am not subject to a court order for the support of a child.

☐ I am subject to a court order for the support of one or more children and am in compliance with a plan approved by the district attorney or other public agency enforcing the order for the repayment of the amount owed pursuant to the order; or

☐ I am subject to a court order for the support of one or more children and am not in compliance with the order or plan approved by the district attorney or other public agency enforcing the order for the repayment of the amount owed pursuant to the order.

Applicant's Social Security No. _____

Applicant's Name *(please print)* _____

Signature of Applicant _____

Date _____

Business or Occupational License Number _____

DS268 (4/2007)

BOND REQUIREMENTS FOR BUSINESS LICENSE

Upon application for a vehicle dealer, rebuilder, manufacturer, distributor or lessor license, the applicant must furnish a surety bond in the amount of $10,000 for utility or boat trailers with an unladen weight of 3,500 or less, $50,000 for motorcycles, utility or horse trailers without living quarters with an unladen weight of 3,501 pounds or more and $100,000 for all other vehicle types. An application for a broker license must include a bond in the amount of $100,000. NRS 482.345 and 482.3333

The bond covers the dealer's principal place of business and all branches operated by him if:

- All are within the same county; and
- All are operated under the same name.

Manufacturers, distributors, dealers and brokers are licensed separately. Additional types of licenses require submission of additional bonds and fees.

SURETY BONDS
Form OBL-210

Surety bonds for business licenses require submission of original bond, executed on a form supplied by the Department and having corporate surety thereon, duly licensed to do business within the State of Nevada. Cancellation or lapse in surety coverage will result in revocation of the business license.

The bond must be completed in its entirety, signed by a principal of the business and countersigned by an agent of the surety company affording coverage. The corporate seal of the surety must be imprinted or affixed to the bond.

The bond must show the individual name, names of all partners, or if a LLP, LLC or corporation, the LLP, LLC or corporate name, and the name under which the licensee will be conducting business.

Example:
- Individual's full legal name and DBA name
- Full legal Names of all partners and DBA name
- LLP name and DBA name
- LLC name and DBA name
- Corporate name and DBA name, or
- Corporate name only if both corporate name and DBA are identical.

The name(s) on the surety bond must read the same as the name(s) on the application for license and all corresponding documents.

If any of the information contained on the surety bond is inaccurate or has been changed, the applicant or licensee must submit a corrected bond or a rider from the surety company affording coverage, correcting the information. **Do not write on, erase, white out, or in any way alter the information on the bond.** Any bond, which has been materially altered will be considered invalid by the Department and rejected.

DEPOSIT IN LIEU OF BOND

In lieu of a surety bond the applicant may deposit with the Department an equivalent amount of money in United States currency, federal or Nevada state bonds with an actual market value of not less than the amount required by the Department, or a time certificate of deposit from a bank or savings and loan association situated in Nevada.

If an applicant or licensee wishes to use a time certificate in lieu of surety bond the certificate must state the "business name" the word "or" and "Department of Motor Vehicles."

- **Example:** *Rhonda's Roadsters or Department of Motor Vehicles*

A letter must accompany the certificate from the originating bank stating that the funds are unavailable for release without written authorization from the Department.

RELEASE OF DEPOSIT IN LIEU OF BOND
Form DS-251

Pursuant to Nevada Revised Statutes 482.346.4(a), a deposit in lieu of a surety bond must be held by the Department for a period of three years from the date the licensee ceases to be licensed by the Department or from the date the deposit has been replaced with another type of bond.

At the expiration of three years, the business principal(s) originally depositing the funds may apply for release of the deposit. Upon verification by the Department that no outstanding claims exist, the deposit will be released.

Occupational and Business Licensing
555 Wright Way
Carson City, Nevada 89711
(775) 684-4690
www.dmvnv.com

VEHICLE INDUSTRY BUSINESS LICENSE BOND

Bond Number _____

License Type:
- ☐ Broker
- ☐ Dealer/Rebuilder/Lessor
- ☐ Distributor
- ☐ Manufacturer
- ☐ Transporter

KNOW ALL MEN BY THESE PRESENTS:

That _____, as principal,
(Individual or Corporate Name and Name Doing Business as)

located in the County of _____, State of Nevada, obligee, and

_____, a corporation organized and existing under and by virtue of the
(Name of Surety)

laws of the State of _____, and authorized to transact a surety business in the State of

Nevada, as surety, are held and firmly bound unto the State of Nevada in the penal sum of _____ THOUSAND DOLLARS for the payment of which well and truly to be made we hereby bind ourselves, our respective heirs, administrators, executors, successors and assigns jointly and severally, firmly by these presents:

To be effective on the _____ day of _____, _____

THE CONDITION OF THIS OBLIGATION IS SUCH THAT:

WHEREAS, the above-named principal has been licensed to carry on or conduct in this State the business of buying, selling, transporting, manufacturing, distributing, brokering or dealing in new or used vehicles, trailers, motorcycles or semitrailers; and

WHEREAS, the above-named surety herein agrees that any person injured by the action or actions of the principal and/or his salesmen involved in any fraud or fraudulent representation or in violation of any of the provisions of Chapter 482 of the Nevada Revised Statutes or Nevada Administrative Codes may bring action in said injured person's own name against the said surety. This bond is continuous in form and the total aggregate liability of the bond is limited to the payment of the total amount of the bond. In the event of a dispute of a claim by the surety company, application may be made to the Director, Department of Motor Vehicles for good cause shown. After notice and hearing, the director may authorize payment of funds from here said surety coverage.

(SEE BACK)

Bond Number _____

This bond may be canceled by the surety at any time by giving written notice by registered mail of its desire and intention so to do. Said cancellation shall be effective thirty (30) days after the receipt of said notice by the State of Nevada Department of Motor Vehicles, Occupational and Business Licensing Section.

Signed, sealed and dated this _____ day of _____, _____

X_____
(Principal)

_____
(Surety)

Telephone Number of Surety: (_____) _____

_____
(Mailing Address of Surety Company, Street)

_____
(City, State and Zip Code)

By _____
(Signature, Attorney-In-Fact for Surety)

_____
(Printed Name, Attorney-In-Fact)

(Surety Seal)

Countersigned on behalf of:

_____
(Surety)

this _____ day of _____, _____

_____
(Signature, Agent)

_____
(Printed Name, Agent)

_____
(Business Name, Agent)

_____
(Business Address, Agent)

OBL210 (01/2009)

Occupational and Business Licensing
555 Wright Way
Carson City, NV 89711
(775) 684-4690
www.dmvnv.com

DEPOSIT RELEASE APPLICATION

Pursuant to Nevada Revised Statutes

Business License No. _____

Business Name _____

Mailing Address _____
Street City State Zip

Bank _____

Address _____
Street City State Zip

Certificate No. _____ Amount $_____

Reason for Release _____

_____

_____

Signed _____ Date _____

Subscribed and sworn before me this_____day of_____, _____

_____
Notary Public or Authorized Nevada DMV Representative

◆◆◆

INSURANCE REQUIREMENTS FOR BUSINESS LICENSING

Dealers, rebuilders, manufacturers, and distributors must furnish and keep in force automobile liability insurance as a requirement of licensing. (NRS 482.325) An acceptable certificate of insurance must include the following coverage:

1. Any Auto, bodily injury $15,000 per person, bodily injury per accident $30,000, property damage $10,000; **or**

2. Scheduled, non-owned and hired autos, bodily injury $15,000 per person, bodily injury per accident $30,000, property damage $10,000.

If licensed as a short-term lessor, a certificate of insurance must include the following coverage:

1. Hired autos or scheduled autos with a combined aggregate liability total of $100,000 or bodily injury $15,000 per person, bodily injury per accident $30,000, property damage $10,000.

If licensed as a long-term lessor, a certificate of insurance must include the following coverage:

Any auto, bodily injury $15,000 per person, bodily injury per accident $30,000, property damage $10,000 **or**

All owned autos and non-owned autos, bodily injury $15,000 per person, bodily injury per accident $30,000, property damage $10,000.

Evidence of self-insurance with the State of Nevada is acceptable for the operation of a short-term lessor. Self insurance covers vehicles registered in the name of the business. It does not cover vehicles held for sale, or vehicles with dealer or loan license plates.

If a vehicle dealer wishes to add short-term leasing, or a short-term lessor wishes to add vehicle sales to an existing business, a new certificate of insurance stating coverage for the additional activity must be submitted to the Department as part of the license application.

Insurance is not required for a dealer, manufacturer or distributor who deals solely in trailers. If the licensee sells new or used motorcycles or new or used vehicles, then the above insurance requirements are required.

DMV
Nevada Department of Motor Vehicles

Occupational and Business Licensing
555 Wright Way
Carson City, NV 89711
(775) 684-4690
www.dmvnv.com

Please print or type

CERTIFICATE OF INSURANCE

Producer:

_____

_____

_____

Telephone: (_____)_____

Companies affording coverage and NAIC #

A.

B.

C.

Business License Number(s): _____

_____

Name of Insured: _____

Physical Address: _____

Additional Location(s) _____

Automobile Liability

This is to certify that the Automobile Liability Insurance listed has been issued to the insured business named above for the full extent of the policy period. Should this policy cancel or type of coverage change before the expiration date, the issuing company shall provide written notice to the Department of Motor Vehicles within 30 days.

This certificate is issued as a matter of information only and confers no rights upon the certificate holder. This certificate does not amend, extend or alter the coverage afforded by the policies below. CSL means Combined Single Limit. This term is acceptable on a certificate of insurance as long as the amount is equal to or greater than Aggregate total.

Motor Vehicle Dealers, Manufacturers, Rebuilders, Distributors and Transporters
Minimum requirement: Combined aggregate liability total of $100,000 or bodily injury $15,000 per person, bodily injury per accident $30,000, property damage $10,000.

Type of Coverage	Policy Number(s)	Effective Date	Expiration Date	Limits of Liability

☐ Any Auto
☐ Scheduled, Non-owned and Hired Autos
☐ Motorcycles
☐ Continuous Until Canceled

Bodily Injury (per person): _____
Bodily Injury (per accident): _____
Property Damage: _____
Aggregate Total: _____

Long Term Lessors and Out of State Manufacturers and Distributors
Minimum requirement: Combined aggregate liability total of $100,000 or bodily injury $15,000 per person, bodily injury per accident $30,000, property damage $10,000.

Type of Coverage	Policy Number(s)	Effective Date	Expiration Date	Limits of Liability

☐ Any Auto
☐ All Owned and Non-owned
☐ Motorcycles
☐ Continuous Until Canceled

Bodily Injury (per person): _____
Bodily Injury (per accident): _____
Property Damage: _____
Aggregate Total: _____

Short Term Lessors

Minimum requirement: Combined aggregate liability total of $100,000 or bodily injury $15,000 per person, bodily injury per accident $30,000, property damage $10,000.

Type of Coverage | Policy Number(s) | Effective Date | Expiration Date | Limits of Liability

☐ Hired Autos
☐ Scheduled Autos
☐ Continuous Until Canceled

Bodily Injury (per person): _____
Bodily Injury (per accident): _____
Property Damage: _____
Aggregate Total: _____

Automobile Wreckers and Salvage Pools

Minimum requirement: Combined aggregate liability total of $100,000 or bodily injury $15,000 per person, bodily injury per accident $30,000, property damage $10,000.

Type of Coverage | Policy Number(s) | Effective Date | Expiration Date | Limits of Liability

☐ Any Auto
☐ Scheduled, Non-owned and Hired Autos
☐ Continuous Until Canceled

Bodily Injury (per person): _____
Bodily Injury (per accident): _____
Property Damage: _____
Aggregate Total: _____

Body Shops

Minimum requirement: Combined aggregate liability total of $100,000 or bodily injury $15,000 per person, bodily injury per accident $30,000, property damage $10,000.

Type of Coverage | Policy Number(s) | Effective Date | Expiration Date | Limits of Liability

☐ Any Auto
☐ Non-owned and Hired Autos
☐ Continuous Until Canceled

Bodily Injury (per person): _____
Bodily Injury (per accident): _____
Property Damage: _____
Aggregate Total: _____

Drive Schools

Minimum requirement: Scheduled autos with a combined aggregate liability bodily injury or death $100,000 per person, bodily injury or death per accident $300,000, property damage $50,000.

Type of Coverage | Policy Number(s) | Effective Date | Expiration Date | Limits of Liability

☐ Scheduled Autos
☐ Continuous Until Canceled

Bodily Injury (per person): _____
Bodily Injury (per accident): _____
Property Damage: _____
Aggregate Total: _____

YEAR	MAKE	MODEL	VEHICLE IDENTIFICATION NUMBER

This document must be the original. Upon affixing your signature you are certifying that you have assigned the proper type of coverage for the operations and plates of the business named on this policy.

_____ _____ _____

Printed Name of Authorized Agent | Signature | Date

Upon completion, please return the original certificate to the Department. A photocopy is not acceptable as proof of financial responsibility.

DS272 (4/2007)

DMV Business License Sample

State of Nevada
Department of Motor Vehicles
Occupational and Business Licensing Section

License #: D0000207

SAMPLE BUSINESS
555 WRIGHT WAY
CARSON CITY NV 89711

TYPE OF LICENSE : DEALER

Used Motor Vehicle
Used Trailer

THIS DOCUMENT AUTHORIZES YOU TO ENGAGE IN BUSINESS AS A LICENSEE OF THE DEPARTMENT OF MOTOR VEHICLES UNTIL 12-31-2002.

Temporary Location License DS-261 (NAC 482.050 – 482.085)

A licensed dealer may not exhibit, display for sale or sell vehicles at a temporary location without first obtaining a temporary license for sale or exhibit of a vehicle.

“Exhibit a vehicle” means to display three or more vehicles owned or controlled by a licensed dealer at a temporary location and at which:

1. The licensed dealer’s name is displayed on or about each vehicle;

2. Any solicitation or sale is prohibited;

3. A salesperson or representative of the licensed dealer is not present; and

4. A telephone of any other device for communication with a salesperson or representative of the dealer is not provided.

A Temporary Location License to exhibit vehicles for sale is valid for a period not to exceed 21 days. The license fee to exhibit vehicles at a temporary location is $25.00.

“Display a vehicle for sale” means to display one or more vehicles owned or controlled by a licensed dealer at a temporary location and at which:

1. A salesperson or representative of the licensed dealer is present; or

2. A telephone or any other device for communication with a salesperson or representative of the dealer is provided.

A Temporary Location License to display vehicles for sale is valid for a period not to exceed 7 days. The license fee to display vehicles for sale at a temporary location is $75.00.

A maximum of 6 temporary location licenses to display for sale may be obtained within a calendar year.

An application for temporary license to exhibit vehicles or to display vehicles for sale must be submitted on a form supplied by the Department, at least three days prior to the date of the sale or exhibit.

Requests for Temporary Location Licenses in a county other than the county of the permanent place of business, requires a rider to the surety bond or a new bond to cover the county in which the event is to take place.

The Temporary Display for Sale License must be posted at the location of the sale. The dealer must also display a sign that is at least two square feet in size stating the name of the dealership.

All applications for Temporary Location License must have the original signature of an authorized representative of the business.

The bottom portion of the application regarding business license and zoning approval must be completed by an authorized city or county official prior to submission. If the form is not signed appropriately, the application will be rejected. If the sale is held on public property, the bottom portion of the application is not required to be completed.

This is a list of some of the frequently used public properties:

Lawlor Events Center	Washoe County Fairgrounds
Thomas and Mack	Reno Sparks Convention Center
Cashman Field	Sam Boyd's Event Center
Elko Convention Center	Las Vegas Convention Center

If you have any questions regarding whether or not a particular location is public property, please refer to the licensing department in that city or county.

DMV
Nevada Department of Motor Vehicles

Occupational and Business Licensing
555 Wright Way
Carson City, NV 89711
(775) 684-4690
www.dmvnv.com

APPLICATION FOR TEMPORARY LOCATION LICENSE

Must be submitted at least three (3) days prior to commencement of the event

Fees: ☐ $25.00 Exhibit of Vehicle(s)
Number of Vehicles: _____

☐ $75.00 Display of Vehicle(s) for Sale
☐ new vehicles (see reverse of application for requirements)
☐ used vehicles

Business Name: _____ License Number: _____

Mailing Address: _____

Location of Exhibit or Sale: _____

Physical Address: _____

City, State and Zip: _____

Beginning Date of Exhibit or Sale: _____ Ending Date: _____

Authorized Representative's Printed Name | Signature | Date

****

The section below must be completed by City/County Licensing Authority and Zoning Ordinance Authority. Must be completed and signed prior to submission to the Department of Motor Vehicles.

****

The above named applicant is in compliance with all city/county business licensing requirements and zoning regulatory ordinances as they pertain to display or sale of vehicles at the location and date of the event as listed.

License: ☐ Has Been Issued ☐ Will Be Issued ☐ Is Not Required

Authorized City/County Official | Title | Phone Number

Zoning approval :

Location Approved for: ☐ Exhibit Only ☐ Sales

Authorized City/County Official | Title | Phone Number

****

To be completed by Authorized DMV Representative

☐ Approved by: _____Initials
☐ Denied by: _____Initials (State reason) _____

DS 261 (6-2005)

Temporary Location License Requirement Sheet

NAC 482.055 "Display a vehicle for sale" defined. "Display a vehicle for sale" means to display one or more vehicles owned or controlled by a licensed dealer at a temporary location and at which:

1. A salesman or representative of the licensed dealer is present; or
2. A telephone or any other device for communication with a salesman or representative of the licensed dealer is provided.

NAC 482.060 "Exhibit vehicles" defined. "Exhibit vehicles" means to display three or more vehicles owned or controlled by a licensed dealer at a single temporary location and at which:

1. The licensed dealer's name is displayed on or about each vehicle;
2. Any solicitation or sale is prohibited;
3. A salesman or representative of the licensed dealer is not present; and
4. A telephone or any other device for communication with a salesman or representative of the licensed dealer is not provided.

Display for Sale or Exhibit Vehicles

Applications must be submitted to the Department at least three (3) days before the event begins.

Applications must be completed in full and signed by a business principal or authorized representative.

The lower portion of the application must be completed and signed by authorized City/County Licensing and Zoning officials.

Display of Vehicles for Sale

A licensee may be issued a maximum of six (6) Temporary Display for Sale Licenses within a calendar year.

If sale is taking place in a county other than the county licensed in, the licensee must submit the following with the application for Temporary Location:

1. Franchise Letter authorizing the Dealer to display vehicle for sale in the additional county.
2. A New bond or rider to the existing bond to cover the additional county.

Temporary DMV Business License Sample

State of Nevada
Department of Motor Vehicles
Occupational and Business Licensing Section
Temporary Business License

License #: D0000207

SAMPLE BUSINESS
555 WRIGHT WAY
CARSON CITY NV 89711

TYPE OF LICENSE: DEALER
Used Motor Vehicle
Used Trailer

DISPLAY FOR SALE: SAMPLE DISPLAY LOCATION
555 WRIGHT WAY
CARSON CITY NV 89711

THIS DOCUMENT AUTHORIZES YOU TO ENGAGE IN BUSINESS AS A LICENSEE OF THE DEPARTMENT OF MOTOR VEHICLES FROM 10-01-2002 TO 10-08-2002 AT THE LOCATION AS DESCRIBED ABOVE.

LICENSING OF AN ADDITIONAL LOCATION

An additional location of a dealership is considered a separate and new business and must meet all requirements of a new business, with the following exceptions:

- If the principals on the application for an additional location have submitted fingerprint cards, it is not necessary to submit additional fingerprint cards with the application for the second location.

- The bond covering the dealer's principal place of business will cover the additional location if located in the same county and operated under the same name. A rider from the bonding company, acknowledging coverage for the additional location is acceptable. For any business located in a different county and/or operated under a different name, a separate bond is required.

- If the additional location has the same name as the first location, it is not necessary to submit an additional insurance certificate; an amendment to the policy acknowledging coverage for the second location is acceptable.

Application for business license at an additional location is processed in the same manner as an original application. Processing time is one to two weeks. Upon approval, a business license number will be issued. Supplies such as license plates and Dealer's Report of Sale books are issued by business license number and cannot be transferred between locations.

The business license and salesperson license are displayed at the licensee's physical location as listed on the license. Books and records must be made available for inspection by the Department during normal business hours.

CHANGE OF BUSINESS PRINCIPAL INFORMATION

Documentation for change of business information may be submitted at any Occupational and Business Licensing office.

ADDING A BUSINESS PRINCIPAL

To add a principal to an existing business, an updated business license application must be submitted, signed by a current principal of the business, checking the change of business principal box and listing all principal's full legal names in the ownership section.

A Personal History Questionnaire form DS-242 completed with two sets of fingerprint cards, fingerprint processing fee, completed Child Support form DS-268 and completed Authorization for Release of Information form DS-254 must be submitted for the new business principal with the license application.

Updated Personal History Questionnaire form DS-242 and Child Support form DS-268 must be completed by existing principal(s).

Licensee Acknowledgement form DS-308.

If the business is either an individual or a partnership, a rider to the bond must be submitted adding the new principal's full legal name.

If the business is LLP, LLC or corporation, new corporate documents reflecting the change of business principals or corporate officers are required.

The Department will conduct a background investigation on the applicant being added to the business and upon determination of eligibility for licensing, update the records of the Department to reflect the new information.

REMOVING A BUSINESS PRINCIPAL

To remove a principal from the business license, an updated business license application reflecting the change of business principal information must be submitted to the Department along with a letter from the principal being removed stating that the principal is resigning from the business or relinquishing interest in the business and wishes to be removed.

An Updated Personal History Questionnaire form DS-242 and Child Support form DS-268 must be completed by existing principal(s).

If the business is a LLC or corporation, new corporate documents and corporate filing reflecting the change of officers must be submitted.

If the business is a partnership, a rider to the bond must be submitted reflecting the removal of the principal.

In the event of the death of a principal, documentation of the death and a request to remove the person from the license is acceptable.

If a business is individually owned and the principal dies, the Department must be notified. Business operations must cease and the Department will change the business record to "Out-of-Business" status. A surviving spouse or surviving child may not continue to operate a business if not listed on the original license.

CHANGE OF BUSINESS ADDRESS

When a licensee changes the location or name of any of the established places of business, he can not conduct business under the new name, or at the new location, until he has been issued a license for the new name or location from the Department.
NRS 482.326.4

Documentation for change of address may be submitted to any Occupational and Business Licensing office.

CHANGE OF PHYSICAL ADDRESS

When a licensee changes the physical address of the business, an updated business application form must be submitted to the Department documenting the new address information.

An Updated Personal History Questionnaire form DS-242 and Child Support form DS-268 must be completed by existing principal(s.)

New city or county business licenses, rider to the bond, certificate of insurance and photo of the new location reflecting the new address must accompany the updated application form.

If the new location of the business is in a county different from that of the previous location, a new bond or rider to the current bond reflecting the change of county of residence must also be submitted.

Dealers must also submit a Franchise Authority noting the change.

Upon approval, the Department will issue a revised business license, salespersons licenses and registration certificates for any business license plates registered in the name of the business. All licenses will be issued for the remaining portion of the calendar year.

CHANGE OF MAILING ADDRESS

When a licensee changes only the mailing address of the business, an updated business application reflecting the change of mailing address or a letter documenting the new mailing address with this information must be submitted to the Department. No other documentation is needed to change the mailing address only.

RENEWAL OF BUSINESS LICENSE

All business licenses for vehicle dealers, rebuilders, manufacturers, distributors, brokers, salespersons licenses and registration for business license plates expire December 31st of each year. Licenses and registrations issued throughout the year expire on December 31st and pay the same fee; there is no prorating of fees. Licenses issued on or after November 1st, are valid for the following year.

Renewal applications are mailed to all licensees the first week of November of each year. The Occupational and Business Licensing Section of the Compliance Enforcement Division processes all renewals. Licensees are urged to submit the renewal form and fees early to allow processing time. Renewals may also be processed on the web at www.dmvnv.com.

A business principal listed on the renewal form must sign the renewal application. The renewal application will be returned if it is not signed by a business principal. A completed Child Support form DS-268 must accompany the renewal application for each principal. If the form is missing for any of the principals, the renewal application and fees will be rejected and returned to the business.

If the Department does not receive the renewal application prior to close of business on December 31st, all activity must cease until the license is renewed. Failure to cease business operations until the licensee is renewed may result in administrative fines and/or revocation of the license. Renewal applications submitted more than 30 days after the expiration of the license will not be accepted. Failure to renew prior to expiration or within 30 days of expiration will cause the license to be placed in an out of business status and a new application is required.

If the principal wishes, he may designate an office manager or resident agent, who will have authorization to sign the renewal and any other paperwork on behalf of the business. This authorization must be submitted to an Occupational and Business Licensing office in writing on the “Letter of Authorization” form DS-276, and signed by a business principal. This person must submit a completed Personal History Questionnaire form DS-242, two fingerprint cards, Child Support form DS-268 and the $51.25 fingerprint processing fee.

Any change made to the business requires the submission of documentation with the renewal. See “Change of Business Information” section or contact your local Occupational and Business Licensing office for instructions and/or forms.

Salespersons licenses may be renewed at the time of renewal of the business license. If a licensee does not wish to renew a salespersons license, follow the instructions on the renewal notice. A completed Child Support form DS-268 must accompany the renewal application for each salesperson being renewed. If the form is missing for any of the salespersons, the renewal application and fees will be returned to the business.

Business license plates are renewed at the time of renewal of the business license on the renewal form. If a licensee does not wish to renew a license plate, follow the instructions on the renewal form and return the license plate(s) to the Department. Note on the renewal form if a business license plate is lost or stolen.

The number of dealer license plates that may be issued to a dealer or Rebuilder in a number that is limited to the total number of active principals or officers and salespersons licensed to the business, multiplied by 1.5. Example:

Ten total principle officers and salespersons 10 x 1.5 plates = 15 dealer license plates

Manufacturers and distributors may obtain business plates. These are limited to a number that does not exceed the number of principals or officers listed on the license.

Enforcement action will be taken against anyone in possession of a Nevada business license plate or Registration Certificate that has been reported as lost or stolen. If a license plate which you have reported lost or stolen is found or turned into your business**,** the license plate and registration must be returned to the Department. The license plates cannot be reactivated.

BUSINESS LICENSE PLATES

The Department is authorized to issue special license plates to business licensees. The fee for a business license plate is $12.00 plus a $.50 per plate prison industry fee. The business license plate may be renewed for a fee of $12.00.

Business license plates expire on December 31st of the year of issuance. Fees are not prorated.

A Registration Certificate is issued for each license plate and contains the name, address and license number of the business. The Registration Certificate is issued to the license plate and not for a specific vehicle. This allows for a license plate to be moved from one vehicle to another under the control of the business.

LICENSE PLATE DISPLAY

License plates must be securely attached to the vehicle. License plates may not be displayed loosely in the window or by any other unsecured method.

BUSINESS LICENSE PLATES USAGE

A vehicle displaying manufacturer, distributor or dealer license plates may be operated for personal use by a corporate officer, head of a Department or salesperson of the business who is licensed by the Department.

Additionally, a business license plate may be used by a business representative to carry out normal business activities. This would include display, demonstration, maintenance, sale, or exchange of a vehicle, driving the vehicle to a temporary off-site sale, etc.

Pursuant to NAC 482.048, a manufacturer, distributor, dealer or rebuilder shall not authorize use of a business license plate on:

- Vehicles driven by a member of the family of the principal owner, officer, head of a department or salesperson of the business, if the family member is not licensed as a manufacturer, distributor, dealer, rebuilder or salesperson.

- A vehicle that does not constitute inventory held for sale by the manufacturer, distributor, dealer or rebuilder.

- A vehicle that is owned and has been leased or rented to any person.

- A vehicle operated in the furtherance of the business, i.e., work or service vehicles owned by the manufacturer, distributor, dealer, or rebuilder.

- Vehicles that have been sold.

Pursuant to NRS 482.320.2, dealer license plates may not be used on:

- Work or service vehicles owned or controlled by the dealer/rebuilder.
- Vehicles leased by dealers, except vehicles rented or leased to vehicle salespersons in the course of their employment.
- Vehicles that are privately owned by the owners, officers or employees of the dealer/rebuilder.
- Vehicles that are being used for personal reasons by a person who is not licensed by the Department or identified as an officer, department head or salesperson for the dealer/rebuilder.
- Vehicles that have been given or assigned to persons who work for the dealer/rebuilder.
- Vehicles purchased by a manufacturer, distributor, dealer, or rebuilder for personal use which the licensee is not licensed or authorized to resell.

NEVADA LOAN LICENSE PLATES

Loan license plates may be obtained by a Nevada licensed dealer or rebuilder and may be used on vehicles that constitute inventory held for sale and are loaned to a customer in the course of business. The vehicle may be used by the customer for any purpose. NAC 482.043

The dealer or rebuilder may use a loan license plate on a vehicle loaned to:

- A customer, in the course of business.
- An officer or employee of the State of Nevada in the furtherance of the business of this state.
- An officer or employee of the University or Community College System of Nevada for any purpose authorized by the system.
- An officer or employee of a school district, for the furtherance of the school district business.
- An officer or employee of a county, city or town for the furtherance of county, city or town business.

- An officer, employee or agent of an organization that is tax exempt pursuant to the provision of section 501(c)(3) of the Internal Revenue Code, for the furtherance of the business of the organization.

- A dealer may use no more than six of the loan plates for personal use by the dealer or member of his immediate family.

A customer may not use a loan license plate for more than 10 days in a calendar year. A dealer or rebuilder may not accept any fee, compensation or other form of direct profit from the loan of a vehicle displaying a loan license plate. NAC 482.0435

The dealer or rebuilder must maintain a written record of each vehicle that is loaned to a customer in the course of business and on which a loan license plate is displayed. The written record must be maintained at the established place of business and must be available for inspection by the Department. NAC 482.042 and 482.0425

SUPPLEMENTAL LOAN LICENSE PLATES

Supplemental loan license plates may only be issued to a franchised dealer who is required under the terms of their franchise agreement to provide loan vehicles of the same make to customers whose vehicles are being serviced or repaired.

Supplemental loan license plates must be registered to a specific vehicle and may only be transferred upon completion of a Supplemental Loan License Plates application, form DS-309 and payment of associated fees.

The requesting franchise dealer must provide a copy of the provisions of the franchise agreement that conflict with the limitation of 40 loan license plates.

A statement on company letterhead indicating the average daily repairs to justify the number of loan license plates requested, must accompany this request. The justification must be based on the number of work or service orders issued by the franchise dealer for vehicles of the same make and line as the vehicles, which are covered by the agreement. NAC 482.040

BUSINESS LICENSE PLATES ISSUED BY OTHER STATES

It is the policy of the Department to honor the use of business license plates issued by states other than Nevada if the use of such license plates is in compliance with the statutes of the issuing state.

GOING OUT OF BUSINESS

When a business licensee goes out of business, the business principal or officer must notify the Department immediately. The licensee must complete an Out of Business Memorandum form DS-266. This form is documentation that the business voluntarily went out of business and includes the date the business closed.

Supplies issued to the licensee by the Department must be returned at the time the business ceases to operate. Supplies include unused portions of Dealer's Report of Sale books, 15-Day Drive Away Permits, Short-Term Lessor Permits, DRS placards and all business license plates and registrations issued to the business. The dealer or rebuilder is responsible for maintaining all copies of DRS and Short-Term Lessor Permits that were issued by the business for a period of three years from the date of issue.

Occupational and Business Licensing
555 Wright Way
Carson City, NV 89711
(775) 684-4690
www.dmvnv.com

OUT OF BUSINESS MEMORANDUM

_____, _____

To: _____

From: _____

Subject: **Out of Business**

This will confirm that_____

license number _____, is out of business for the following reason(s): _____

_____

_____
Forwarding Address Forwarding Phone Number

Supplies Collected

Business License Plates:

_____

_____

_____

Supplies:

_____

_____ _____ _____ _____

_____ _____ _____ _____

_____ _____ _____ _____

_____ _____ _____ _____

_____
Licensee's Signature Date

_____
DMV Representative's Signature Date

DS-266 (Rev 5-2000)

REQUESTS FOR EXTENSION OF TIME FOR SUBMITTING A DEALER'S REPORT OF SALE (DRS) Form OBL-275

If a dealer is unable to submit the Dealer's Report of Sale and title documents to the Department within the statutory time frame, the dealer may request an extension of time.

Extension requests must be submitted within the statutory time frame required for submission of a DRS:

- Twenty Days from the date of sale on a new vehicle; or
- Thirty Days from the date of sale on a used vehicle.

A request for an extension must be submitted to an Occupational and Business Licensing office on an Extension Request (form OBL-275). The request must explain why the dealer is unable to submit the title documents within the statutory time frame. An authorized representative of the dealership must sign the form and a photocopy of the DRS must accompany the request.

An extension should be requested only when absolutely necessary and will be granted on an exception only basis. Dealers are required, by statute, to send title documentation to the Department within the required time frame and may be subject to an audit, administrative fine or administrative action against their business license for failure to comply.

A notice of approval or denial of the DRS extension will be mailed to the business. If the request is denied, the reason will be marked on the extension form.

Date of Transaction: NRS 482.423, 482.424, 482.4235, 482.4245 defines the actual date of the sale or lease of a new or used vehicle as the day the DRS is executed. This date may not be changed, extended, or altered.

DMV
Nevada Department of Motor Vehicles

Occupational and Business Licensing
555 Wright Way
Carson City, NV 89711
(775) 684-4690
www.dmvnv.com

DEALER'S REPORT OF SALE EXTENSION REQUEST

Date: _____ Business License Number: _____

Business Name: _____

Mailing Address: _____

DRS Number: _____ Date of Sale: _____

Vehicle Year: _____ Make: _____ VIN: _____

Reason extension is being requested (explain in detail):

_____

_____

Requested by: _____

Signed: _____
Signature of business principal or authorized representative Title of Authorized Representative

Note: Extension requests must be submitted within the statutory time frame required for submission of the DRS:

- Twenty days from date of sale on new vehicles
- Thirty days from the date of sale on used vehicles

A Photocopy of the DRS must accompany this form

****

Do not write below this line, doing so will void extension request.

To be completed by Occupational and Business Licensing personnel only.

☐ An extension of time for submitting this DRS has been granted until: _____

☐ An extension of time for submitting this DRS has been denied for the following reason(s):

- ☐ Not submitted within the statutory time frame.
- ☐ A photocopy of the DRS was not attached.
- ☐ A detailed explanation for the delay in submitting extension request is required.
- ☐ The reason given for the extension is not sufficient to have an extension granted and has been submitted to Compliance Enforcement Division office.
- ☐ Request by or Signature line not completed.
- ☐ Other:

Signed by: _____ Date: _____

OBL275 (05/2008)

AUTHORIZING AN EMPLOYEE TO CONDUCT BUSINESS WITH THE DEPARTMENT

Form DS-276

To protect your business and prevent unauthorized persons from fraudulently obtaining titles, license plates, controlled forms, licensing supplies or transacting business in your name, written authorization on a Letter of Authorization form DS-276, must be filed with the Department identifying any person, other than the licensed principals, acting on behalf of the business and the type of transactions authorized.

A licensed principal must sign the Letter of Authorization and authorized persons must be employees of the business.

A person wishing to conduct title transactions, obtain titles or request forms on behalf of a licensed dealer must possess sufficient identification to establish their identity and relationship to the licensed business. If identification cannot be confirmed, the person will not be allowed to complete transactions on behalf of the business.

Preferred forms of identification are a Nevada Driver's License or Nevada Identification Card. Another state's driver license or identification card, which contains a picture and signature of the applicant, is acceptable.

The business must be actively licensed with current bond and insurance in order to receive licensing supplies or transact business.

DMV
Nevada Department of Motor Vehicles

Occupational and Business Licensing
555 Wright Way
Carson City, NV 89711
(775) 684-4690
www.dmvnv.com

LETTER OF AUTHORIZATION

Please print or type

Business Name: _____ Business License Number: _____

Address: _____

City State Zip Code: _____

Telephone Number: (_____)_____

Please check appropriate authorization boxes:

- ❑ All Activities
- ❑ Pick Up Supplies
- ❑ Titles; Authorized to sign title work
- ❑ Pick Up Licenses
- ❑ Sign Renewal Form
- ❑ Pick Up Plates/Decals
- ❑ Titles, Pick Up only
- ❑ Other _____

_____
Printed Name of Authorized Agent — Signature

_____
Printed Name of Authorized Agent — Signature

_____
Printed Name of Authorized Agent — Signature

_____
Printed Name of Authorized Agent — Signature

The listed Agent(s) is no longer authorized to represent my business:

Printed Name of Agent	Printed Name of Agent	Printed Name of Agent
Printed Name of Agent	Printed Name of Agent	Printed Name of Agent

I hereby authorize the changes as indicated above for my business with the Nevada Department of Motor Vehicles.

_____
Printed Name of Principal

_____ _____
Signature of Principal — Date

To protect your business, notify the Department immediately of any changes to the above information.

DS276 (Rev 1/2005)

OCCUPATIONAL SALESPERSON LICENSING

"Salesperson" means: A person employed by a vehicle dealer, under any form of contract or arrangement to sell, exchange, buy or offer for sale, or exchange an interest in a vehicle to any person, who receives or expects to receive a commission, fee or any other consideration from the seller or purchaser of the vehicle; or a person who exercises managerial control within the business of a dealer or a long-term or short-term lessor, or who supervises salespersons employed by a dealer or a long-term or short-term lessor, whether compensated by salary or by commission, or who negotiates with or induces a customer to enter into a security agreement on behalf of a dealer or a long-term or short-term lessor.

REQUIREMENTS FOR LICENSING

1. Certificate of Employment (DS-236) completed and signed by a licensed Nevada Dealer.

2. Personal History Questionnaire (DS-242) completed by applicant.

3. Authorized for Release of Information (DS-254). Release must be notarized or signature witnessed by an authorized DMV representative.

4. Two full sets of fingerprints on cards supplied by the Department. Applicants must be fingerprinted by an authorized DMV representative or law enforcement agency. Some agencies may charge for fingerprinting. Check with your local agency.

5. Child Support Information (DS-268) completed and signed by applicant.

6. Licensee Acknowledgement (DS-308).

7. Occupational License (Salesman) Disclaimer (DS-264). Disclaimer must be notarized or signature witnessed by an authorized DMV representative.

8. Non-refundable license application fee.

NOTE: All forms must be completed in full. See each form for specific information required.

FEES

Original License	$75.00
Annual Renewal	$40.00
Transfer	$20.00

Occupational salesmen licenses expire on December 31st of each year. The cost for licensees issued throughout the year is the same, there is not prorating of fees. If the license has been expired for 6 months or more, the applicant must submit an updated application, fingerprint cards and pay the original license fee.

A person may not engage in the activities of a vehicle salesperson without first applying for and being issued a salesperson's license by the Department.

Photo identification is required at the time of submittal of an application. Applicants must be at least eighteen years of age.

Upon receipt of the completed application and fees, the Department will issue a 60-day temporary permit, which will allow the salesperson to engage in sales activities for the employer until the background investigation is completed and a permanent license is issued.

The temporary permit, as well as the permanent license, must be displayed at the employer's business, in a place where it is visible by the general public.

If a person ceases to be employed, the employer must notify the Department within ten days of the date of termination and return the license to or temporary permit to the Department.

If the individual is not re-employed within 30 days, the license will be denied and the applicant may reapply not less than six months from the date of denial.

A salesperson may not re-engage in the activities of a salesperson until a Certificate of Employment (form DS236) from the new employer is submitted a license transfer fee is paid.

A salesperson may only be licensed to work at one licensed Nevada dealership.

If a licensed salesperson changes their residential address, the salesperson must submit a written notice of the change to the Department within 10 days after the change occurs.

DMV Occupational License Sample

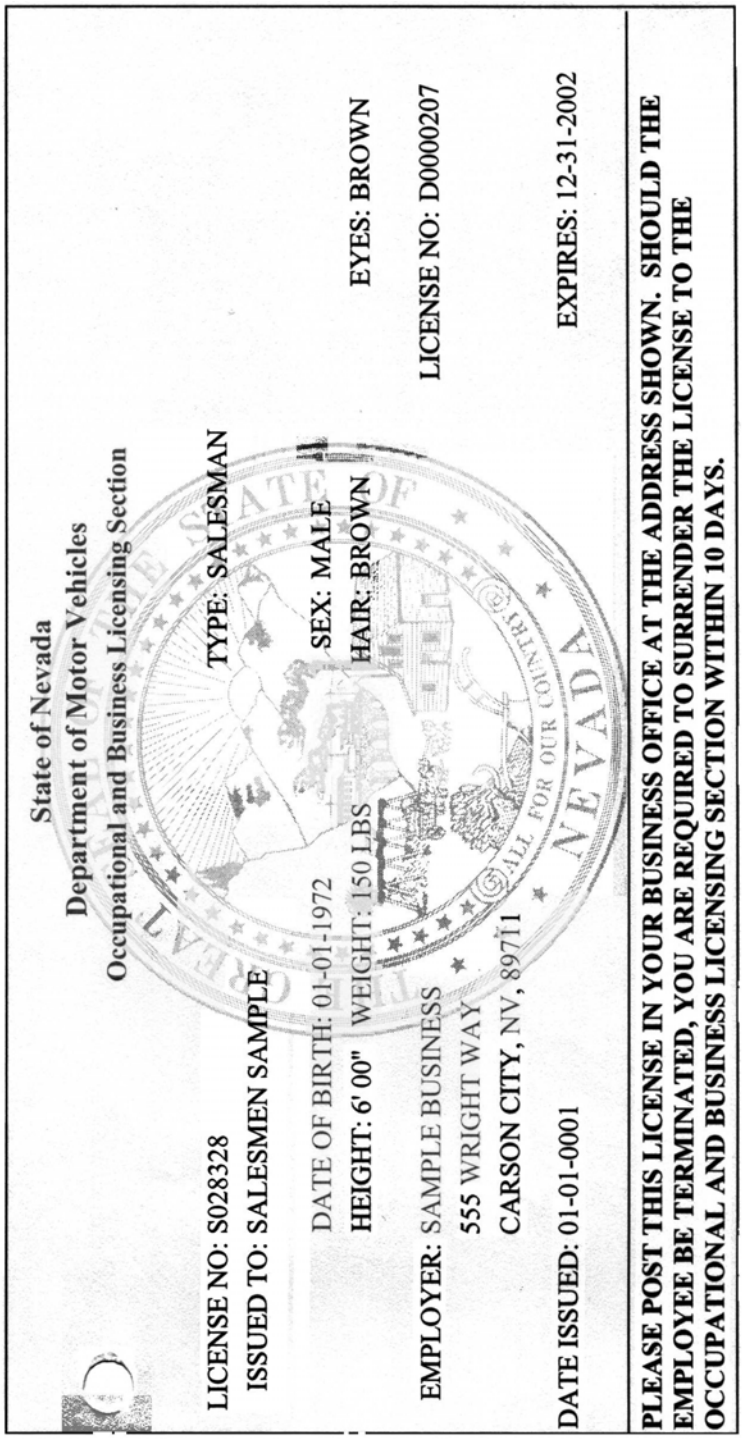

State of Nevada
Department of Motor Vehicles
Occupational and Business Licensing Section

LICENSE NO: S028328
ISSUED TO: SALESMEN SAMPLE

TYPE: SALESMAN

DATE OF BIRTH: 01-01-1972
HEIGHT: 6' 00" WEIGHT: 150 LBS

SEX: MALE
HAIR: BROWN

EYES: BROWN

EMPLOYER: SAMPLE BUSINESS
555 WRIGHT WAY
CARSON CITY, NV, 89711

LICENSE NO: D0000207

DATE ISSUED: 01-01-0001

EXPIRES: 12-31-2002

PLEASE POST THIS LICENSE IN YOUR BUSINESS OFFICE AT THE ADDRESS SHOWN. SHOULD THE EMPLOYEE BE TERMINATED, YOU ARE REQUIRED TO SURRENDER THE LICENSE TO THE OCCUPATIONAL AND BUSINESS LICENSING SECTION WITHIN 10 DAYS.

DMV
Nevada Department of Motor Vehicles

Occupational and Business Licensing
555 Wright Way
Carson City, NV 89711-0100
(775) 684–4690
www.dmvnv.com

CERTIFICATE OF EMPLOYMENT

Please type or print in ink.

		FEES
☐ **Salesman**	☐ New	$ _____
☐ **Inspector**	☐ Renewal	$ _____
Class:	☐ Transfer	$ _____
☐ One ☐ Two		
☐ Gas ☐ Diesel		
☐ **Drive School Instructor**	☐ Behind the Wheel	
☐ CDL ☐ Non CDL	☐ General Classroom	
☐ **DUI School Instructor**	☐ General Classroom Under 18	
☐ **Traffic Safety School Instructor**	☐ Trainee	

EMPLOYEE:

Full Legal Name _____ Occupational License No._____

Physical Address _____

City _____ State_____ Zip _____ Phone No: ( )_____

Social Security No _____-_____-_____ Date of Birth _____ Sex_____

Height _____ Weight _____ Hair _____ Eyes _____

I certify under penalty of perjury that all information contained in this application is true and correct.

Employee's Signature _____ Date: _____

EMPLOYER:

Business Name _____ Business License No._____

Address_____

City _____ State _____ Zip _____Phone No: ( ) _____

_____
Authorized Representative's Name *(Print)* Title

_____
Authorized Representative's Signature Date

DS-236 (4-2006)

DMV
Nevada Department of Motor Vehicles

Occupational and Business Licensing
555 Wright Way
Carson City, NV 89711
(775) 684–4690
www.dmvnv.com

LICENSEE / REGISTRANT ACKNOWLEDGEMENT

Please print or type

I _____ having made application with the Department of Motor
Name (please print)
Vehicles, for a business or occupational license, acknowledge that I have been provided with the Department website address and directions on how to access the Nevada Revised Statute and Nevada Administrative Code pertaining to the license/registration for which I am applying and have been encouraged to review those laws and rules, since they affect the manner in which my business is conducted.

NRS/NAC Chapter 445B	NRS/NAC Chapter 482	NRS/NAC Chapter 483	NRS/NAC Chapters 487 & 597 (Body Shop & Garage only)
Station and Inspector licensing.	Broker, Dealer, Distributor, Long Term Lessor, Manufacturer, Rebuilder, Salesman, Short Term Lessor and Transporter licensing.	Instructor and School licensing.	Body Shop, Garage, Salvage Pool and Wrecker licensing.

DMV WEBSITE Select Business link for specific type of license.
www.dmvnv.com

NRS/NAC WEBSITE Select the appropriate NRS Chapter Link from this website.
www.leg.state.nv.us

Name_____ License No._____

Physical Address _____

City _____ State _____ Zip Code _____ Telephone No: (___)_____

Social Security No _____-_____-_____ Date of Birth_____ Sex_____

Height _____ Weight _____ Hair _____Eyes _____

I certify under penalty of perjury that all information contained in this application is true and correct. I agree to comply with all NRS/NAC requirements applicable to the license that I am applying for.

_____ _____
Applicant's Signature Date

_____ _____
DMV Representative's Signature Date

DS308 (2/2005)

FREQUENTLY ASKED QUESTIONS
DEALER AND LOAN LICENSE PLATES

Q. Can a salesperson for my dealership use a dealer license plate on his own personal vehicle?

A. *No, a dealer license plate may only be used on a vehicle held in the licensed dealership's inventory of vehicles for sale.*

Q. Can I let my son use a dealer license plate on a vehicle from my inventory to go to school?

A. *No. A dealer license plate may only be used by a family member if the family member is licensed as a business principal, department head, corporate officer or salesperson for the business.*

Q. Can I let a customer use a dealer license plate on a vehicle he is leasing from me?

A. *No, a dealer license plate may only be used on a vehicle held in the dealership's inventory of vehicles for sale, it may not be used on a vehicle that has been leased or sold.*

Q. Can a Loan license plate be used on a vehicle purchased by a customer?

A. *No, a Loan license plate may only be used on a vehicle that is held in the dealership's inventory of vehicles for sale.*

Q. Are there any restrictions on the use of a vehicle loaned to my customer with a Loan license plate?

A. *Except for the 10-day limitation, the Department does not impose restrictions on the use of the Loan license plate.*

Q. May I charge my customer a fee for the use of a vehicle with a Loan license plate?

A. *No, a dealership may not accept a fee, compensation or other direct form of profit from the loan of a vehicle displaying a Loan license plate.*

SECTION XI

GLOSSARY/INDEX

GLOSSARY

Authorized Inspection Station (NRS 445B.710) means a station licensed by the Department of Motor Vehicles for inspecting motor vehicles and devices for the control of pollution for compliance with this chapter 445B or any applicable federal regulation or regulation of the Commission.

Authorized Station (NRS 445B.720) means a station licensed by the department of motor vehicles for inspecting motor vehicles and devices for the control of pollution.

Beneficiary means the person for whose benefit the trustee holds the trust property.

Broker (NRS 482.0127) means a person who, for a fee or any other consideration, offers to provide to another person the service of arranging, negotiating or assisting in the purchase of a new or used vehicle which has not been registered or for which an ownership interest has not been taken by the broker.

Complete Front Inner Structure for a Unibody (NRS 482.0154) means the weld-on structure of a vehicle, including, without limitation, the radiator support, left and right aprons, upper and lower rails and strut towers, designed and intended to be located forward of the cowl assembly.

Converted Off-Highway Two-Wheeled Motorcycle means a vehicle that meets the definition of an off-highway two wheeled motorcycle that may be titled and registered pursuant to NRS 482.205 for use on Nevada public roads and highways. Titling and registration is contingent upon inspection and certification by the owner and a Nevada motorcycle dealer or motorcycle repair shop licensed or registered with the Department and certification of the proper installation and use of all conversion components that make the motorcycle compliant with federal motor vehicle safety standards.

Conventional Frame (NRS 482.0157) means the main longitudinal structural members of the chassis of a vehicle used as the major support in the construction of the vehicle.

Cowl Assembly (482.018) means the forward structural portion of a vehicle to which are intended to be attached all or a part of the windshield frame, fire wall, housing of the instrument panel and hinges for the front doors.

Dealer or *Vehicle Dealer* (NRS 482.020) means any person who:

- For compensation, money or other thing of value sells, exchanges, buys, offers or displays for sale, negotiates or attempts to negotiate a sale or exchange of an interest in a vehicle subject to registration under this chapter or induces or attempts to induce any person to buy or exchange an interest in a vehicle;
- Represents himself as having the ability to sell, exchange, buy or negotiate the sale or exchange of an interest in a vehicle subject to registration under this chapter or in any other state or territory of the United States;

- Receives or expects to receive a commission, money, brokerage fee, profit or any other thing of value from the seller or purchaser of a vehicle; or
- Is engaged wholly or in part in the business of selling vehicles or buying or taking in trade vehicles for the purpose of resale, selling or offering for sale or consignment to be sold or otherwise dealing in vehicles, whether or not he owns the vehicles.

Department means the Nevada Department of Motor Vehicles.

Distributor (NRS 482.028) means a person, other than a manufacturer, who is engaged in the business of selling new motor vehicles to dealers.

Essential Parts (NRS 482.030) means all integral parts and body parts, the removal, alteration or substitution of which will tend to conceal the identity or substantially alter the appearance of the vehicle.

Evidence of Compliance (NRS 445B.730) includes a certificate issued when a motor vehicle has been inspected and:

- Has the required equipment; or
- Does not meet the requirements for the control of emissions after the repairs have been made and the Commission waives compliance.

Floor Pan Assembly (NRS 482.0385) means the pans designed and intended to form the floor of the passenger compartment of a vehicle.

Foreign Vehicle (NRS 482.040) means every motor vehicle, trailer or semitrailer, which has been brought into this state otherwise than in the ordinary course of business by or through a manufacturer or dealer and which has not been registered in this state.

Lease (NRS 482.053) means a contract by which the lienholder or owner of a vehicle transfers to another person, for compensation, the right to use such vehicle.

Lienholder (NRS 482.055) means a person who holds a security interest in a vehicle and whose name appears on the certificate of title as legal owner.

Long-Term Lessor (NRS 482.053) means a person who has leased a vehicle to another person for a fixed period of more than 31 days.

Manufacturer (NRS 482.060) means every person engaged in the business of manufacturing motor vehicles, trailers or semitrailers.

Motor Vehicle (NRS 482.075) means every vehicle as defined in NRS 482.135, which is self-propelled.

Off-Highway Two-Wheeled Motorcycle means a two wheeled manufactured motorcycle not originally equipped or certified for use on public roads, travels on two wheels, has a

seat designed to be straddled by the operator and has a handlebar-type steering control. The term includes all-terrain two wheeled motorcycles.

Owner (NRS 482.085) means a person who holds the legal title of a vehicle and whose name appears on the certificate of title, and any lienholder whose name appears on the certificate of title. If a vehicle is the subject of an agreement for the conditional sale or lease thereof with or without the right of purchase upon performance of the conditions stated in the agreement and with an immediate right of possession vested in the conditional vendee or lessee, or if a mortgagor of a vehicle is entitled to possession, then the conditional vendee or lessee or mortgagor shall be deemed the owner for the purpose of this chapter.

Rear Clip Assembly (NRS 482.0965) means the entire rear structural portion of a vehicle designed and intended to be located behind the rear seat of the vehicle.

Rebuilder (NRS 482.097) means a person engaged in the:

- Business of reconstructing motor vehicles by the alteration, addition or substitution of substantial or essential parts; or
- Assembling of replica or specially constructed vehicles from unassembled parts.

Nothing in this section shall be construed to require any licensed new or used vehicle dealer to secure a license as a rebuilder in conjunction with rebuilding in his own facilities.

Rebuilt Vehicle (NRS 482.098) means a vehicle:

- That is a salvage vehicle as that term is defined in NRS 487.770, excluding a non-repairable vehicle; or
- One or more major components of which have been replaced as set forth in this subsection. For the purposes of this subsection, the requisite major components of a vehicle which must be replaced for a vehicle to be considered rebuilt are the:
    - Cowl assembly;
    - Rear clip assembly;
    - Roof assembly;
    - Floor pan assembly;
    - Conventional frame coupled with one additional major component; or
    - Complete front inner structure for a unibody.
- The term does not include a vehicle for which the only change is the installation of a truck cab assembly.
- For the purposes of this section, “replaced,” means the substitution or change in whole of a new, used or after-market part of a vehicle.

Reconstructed Vehicle (NRS 482.100) means any vehicle which shall have been assembled or constructed largely by means of essential parts, new or used, derived from other vehicles or makes of vehicles of various names, models or types, or which, if originally otherwise constructed, shall have been materially altered by the removal of essential parts or by the addition or substitution of essential parts, new or used, derived from other vehicles or makes of vehicles.

Roof Assembly (NRS 482.106) means the structural parts of a vehicle, including, without limitation, more than one-half of the vertical roof supports, the framework of the roof and the exterior metal skin, that together are designed and intended to be located over the passenger compartment to form the roof of the vehicle.

Settlor (NRS 132.310) means the person who creates a trust, however described in the trust instrument.

Short-Term Lessee (NRS 482.053) means a person who has leased a vehicle from another person for a period of 31 days or less, or by the day, or by the trip.

Short-Term Lessor (NRS 482.053) means a person who has leased a vehicle to another person for a period of 31 days or less, or by the day, or by the trip.

Specially Constructed Vehicle (NRS 482.120) means any vehicle, which shall not have been originally constructed under a distinctive name, make, model or type by a generally recognized manufacturer of vehicles.

Terms of the Trust means the duties and powers of the trustee and the rights of the beneficiary or beneficiaries intended by the settlor at the time the trust was created.

Trust Property means the property being held in trust.

Trustee (NRS 132.355) includes an original, additional or successor trustee, whether or not appointed or confirmed by a court.

Vehicle (NRS 482.135) means every device in, upon or by which any person or property is or may be transported or drawn upon a public highway. The term does not include:

- Devices moved by human power or used exclusively upon stationary rails or tracks;
- Mobile homes or commercial coaches as defined in chapter 489 of NRS; or
- Electric personal assistive mobility devices.

INDEX

A

Accessing Motor Vehicle Registration/Title Information VIII-1
Adding a Business Principal X-37
Affidavit for Transfer of Title for Estates under $20,000 ..... III-20
Affidavit VIII-3
Application for Business License X-6
Application for Extension of Time for Submitting DRS X-48
Application for Records Service VIII-2
Application for Temporary Location License X-33
Attempt to Contact I-5
Authorization for Vehicle Restoration II-39
Authorizing an Employee to Conduct Business X-49

B

Being Contacted by the Department X-2
Bill of Sale III-12
Bond Requirements for Business License X-22
Business Information X-3
Business License Plates Issued by Other States X-44
Business License Plates Usage X-42
Business License Plates X-42

C

Canadian Government Contact Information IV-4
Canadian Vehicles IV-2
Certificate of Employment X-54
Certificate of Inspection and Affidavit of Construction (VP-223 trailers) II-51
Certificate of Inspection / Affidavit of Vehicle Construction (VP-64) II-43
Certificate of Inspection / Affidavit of Motorcycle Construction (VP-64M) II-47
Certificate of Inspection For Rebuilt Vehicles (Not Salvage) (VP-64A) II-54
Certificate of Insurance X-28
Change of Business Address X-38
Change of Business Principal Information X-37
Change of Mailing Address X-39
Change of Physical Address X-38
Contact Agency IX-5

D

Dealer Placard VI-4

Dealer Reassignment of Title III-14
Dealer, Rebuilder, Lessor, Manufacturer, Distributor X-7
Dealer's Report of Sale III-1
Deposit in Lieu of Bond X-23
Deposit Release Application X-26
Diesel Vehicles Not Requiring Emission Inspection IX-3
Diesel Vehicles Requiring Emission Inspection IX-3
Duplicate Certificate of Title II-30

E

Erasure Affidavit III-18
Exhaust Gas Standards IX-2

F

Fee Schedules IX-5
Fifteen-Day Special Drive-Away Permit VI-1
Foreign and Gray Market Vehicles IV-1
Foreign Embassy Contacts IV-5
Frequently Asked Questions X-56

G

General Registration Information V-1
Glossary XI-1
Going out of Business X-45
Governmental Services Taxes V-3
Guidelines I-1

I

Importance of Accuracy I-3
Index XI-4
Insurance Requirements for Business Licensing X-27

L

Lease Assumptions III-10
Lease Terminations III-9
Leased Vehicles II-32
Letter of Authorization X-50
License Plate Display X-42
Licensee Overview IX-4
Licensee/Registrant Acknowledgement X-55
Licensing of an Additional Location X-36

Lien Release/Satisfaction of Lien III-16
Lost Title Affidavit II-31

M

Manufacturer's Certificate of Origin II-1
Miles vs. Kilometers II-32
Miles vs. Kilometers IV-2
Military Contacts IV-5
Motor Homes I-6
Motorcycle Conversion Form (VP-254) II-61

N

Nevada Certificate of Title II-6
Nevada Loan License Plates X-43
Notaries Public I-4

O

Occupational Salesman Licensing Fees X-52
Occupational Salesman Licensing X-51
Odometer Mileage Disclosure II-31
One And the Same Affidavit III-22
Out-of-Business Memorandum X-46
Out-of-State Salvage Certificates II-39

P

Power of Attorney III-30
Prison Industry Fee V-3

R

Recording a Lien VII-1
Records Section Fee Schedule VIII-5
Release of Deposit in Lieu of Bond X-23
Removing a Business Principal X-37
Renewal of Business License X-40
Repossessed Vehicles II-32
Repossession Affidavit III-24
Requests for Extension of Time for Submitting DRS X-47
Retention of Salvage Vehicles II-39

S

Salvage Titles II-37
Sample Business License X-30
Sample Salesman License X-53
Sample Temporary Location License X-35
Secure Power of Attorney II-33
Selling Governmental Agency Vehicles III-10
Short-Term Lessors I-10
Smoke Hotline IX-4
Summary IX-1
Supplemental Governmental Services Taxes V-3
Supplemental Loan License Plates X-44
Surety Bond X-22

T

Temporary Location License X-31
Test Procedures IX-2
Title Fees II-65
Transfer on Death III-32
Transmittals to the Department I-8
Trustee Appointment and Powers Affidavit III-29
Trusts III-28

U

U.S. Government Contact Information IV-3
U.S. Military Registration and Titles IV-6
Unrecovered Stolen Vehicles II-32

V

Vehicle Broker X-9
Vehicle Identification Number Information I-2
Vehicle Industry Licensing X-1
Vehicle Inspection Certificate II-58
Vehicle Ratings IX-1
Vehicle Registration Fees V-2
Vehicle Registration, Title and History Information VIII-6
Vehicles For Sale IX-4

W

Waiver Requirements IX-2